City of Stanwood, Washington
Project Specifications and Provisions

DEPOT PARK

City of Stanwood
Department of Public Works
10220 270th Street NW
Stanwood, Washington 98292

Provided to Builders Exchange of WA, Inc. For usage Conditions Agreement see www.bxwa.com - Always Verify Scal

CERTIFICATE OF ENGINEER

DEPOT PARK

City of Stanwood

April 2026

These bidding and contract documents have been prepared by, or under the direction of, the following registered professional engineer[s], licensed in accordance with the laws of the State of Washington to practice in the State of Washington:



Erin Routledge

Digitally signed by Erin Routledge
DN: C=US, E=erin.routledge@perteet.com, O=Perteet, OU=Perteet, CN=Erin Routledge
Date: 2026.04.06 14:53:49-07'00'

Erin Routledge, PE

Approved for Construction:

Kevin Hushagen
Public Works Director

Provided to Builders Exchange of WA, Inc. For usage Conditions Agreement see www.bxwa.com - Always Verify Scal

ADVERTISEMENT FOR BIDS
Depot Park

Opening: April 21, 2026

City of Stanwood

Sealed bids will be received by the Public Works Director at **Stanwood City Hall**, 10220 270th Street NW, Stanwood, Washington 98292, until 2:00 PM, April 21, 2026, and not later, and will then and there be opened and publicly read at that time for the construction of the following improvements:

> The Depot Park project consists of improving the parcel at the northwest corner of 271st Street NW and 84th Avenue W with concrete and brick pavers and site furnishings such as a gazebo, sun shade system, raised seating walls, water fountain, bench swing, amenity lighting, and signage.

The Engineer's estimate for this project is $900,000. The project's Physical Completion Date shall be within 60 working days of the Notice to Proceed, subject to Special Provision section 1-08.4.

Free-of-charge access to project bid documents (plans, specifications, addenda, and bidders list) is provided to Prime Bidders, Subcontractors, and Vendors by going to http://www.bxwa.com and clicking on "Posted Projects," "Public Works," and "City of Stanwood." This online plan room provides Bidders with fully usable online documents with the ability to: download, view, print, order full/partial plan sets from numerous reprographic sources, and a free online digitizer/take-off tool. It is recommended that Bidders "Register" in order to receive automatic email notification of future addenda and to place themselves on the "Self-Registered Bidders List." Bidders that do not register will not be automatically notified of addenda and will need to periodically check the on-line plan room for addenda issued on this project. Contact Builders Exchange of Washington at 425-258-1303 should you require assistance with access or registration.

Project Bid documents (Plans, Specifications, and Addenda) will also be available on the City of Stanwood's website by going to http://www.stanwoodwa.org and checking on "Bid Opportunities", under "Doing Business."

A pre-bid conference will not be held for this Project.

All bids shall be submitted on the prescribed Bid Forms and in the manner as stated in this advertisement and in the Project Manual and said bids shall be accompanied by a bid deposit in the form of a cashier's check, postal money order, or surety bond to the City of Stanwood in the amount of five percent (5%) of the total amount of the bid. If a surety bond is used, said bond shall be issued by a surety authorized and registered to issue said bonds in the State of Washington. The bond shall specify the surety's name, address, contact and phone number, and shall include a power of attorney appointing the signatory of the bond as the person authorized to execute it. Should the successful bidder fail to enter into the Contract and furnish satisfactory performance bond within the time stated in the Information for Bidders, the bid

Provided to Builders Exchange of WA, Inc. For usage Conditions Agreement see www.bxwa.com - Always Verify Scal

deposit shall be forfeited to the City of Stanwood. Faxed bids and/or surety bonds will not be accepted.

Minority and women owned businesses shall be afforded full opportunity to submit bids in response to this invitation, shall not be discriminated against on the grounds of gender, race, color, age, national origin or handicap in consideration of an award of any contract or subcontract, and shall be actively solicited for participation in this project by direct mailing of the invitation to bid to such businesses as have contacted the City for such notification. Further, all bidders are directed to solicit and consider minority and women owned businesses as potential subcontractors and material suppliers for this project.

The City of Stanwood reserves the right to accept the bid that is in the best interest of the City, to postpone the acceptance of bids and the award of the Contract for a period not to exceed sixty (60) days, or to reject any and all bids received. Subject to the foregoing, the bid may be awarded to the lowest responsible bidder. When awarded the Contract, the successful bidder shall promptly execute the Contract and shall furnish a bond of faithful performance of the Contract in the full amount of the Contract price.

Bids must be submitted in a sealed envelope with the outside clearly marked with the bid opening date, bid opening time, and the project name as it appears in this advertisement and the name and address of the bidder. Bids shall be addressed to the Public Works Director, City of Stanwood, 10220 270th St NW, Stanwood, Washington 98292.

Questions or comments regarding this project shall be submitted in writing to Alan Lytton, City of Stanwood, via email (Alan.Lytton@ci.stanwood.wa.us). Questions via phone will not be accepted. Bidders shall submit questions no later than 2:00 p.m. April 17, 2026. Questions or comments will not be acknowledged after this time and date.

Kevin Hushagen
Public Works Director

Publish:
First Publication: Everett Herald, Daily Journal of Commerce: April 7, 2026
Second Publication: Everett Herald: April 14, 2026

Provided to Builders Exchange of WA, Inc. For usage Conditions Agreement see www.bxwa.com - Always Verify Scal

CITY OF STANWOOD
Depot Park

TABLE OF CONTENTS

Advertisement for Bids

PART I BIDDING REQUIREMENTS

Instructions to Bidders
Bidder's Checklist
Non-Collusion Affidavit
Bidder's Construction Experience
Subcontractor List
Bid Proposal
Contractor Certification Wage
Bid Bond

PART II CONTRACT FORMS SUBMITTED FOLLOWING AWARD OF CONTRACT

Contract
Performance and Payment Bond
Escrow Agreement for Retained Percentage
Certificate of Insurance (Provided by Bidder)

PART III STANDARD SPECIFICATIONS

PART IV SPECIAL PROVISIONS

PART V APPENDICES

A. Prevailing Wage Rates
B. Wayfinding and Historic Board Sign Details
C. Pergola Bench Swing Details
D. Water Fountain Details
E. Sunshade Canopy System Details
F. Site Cleanup Reports
G. Illumination Details
H. Standard Plans

Provided to Builders Exchange of WA, Inc. For usage Conditions Agreement see www.bxwa.com - Always Verify Scal

PART I

BIDDING REQUIREMENTS

Provided to Builders Exchange of WA, Inc. For usage Conditions Agreement see www.bxwa.com - Always Verify Scal

INSTRUCTIONS TO BIDDERS

Bidders shall satisfy themselves by personal examination of Plans, Specifications, and site of the proposed improvements, and by any other examination and investigation that they may desire to make as to the accuracy of the estimate of quantities, the nature of the work, and the difficulties to be encountered.

Bids shall be submitted upon the Proposal form that is bound to these Specifications. The Contractor shall submit the Bid Proposal Form, Bid Bond, and Non-collusion Affidavit, Bidders Contractor Experience Form, Subcontractor list, Contractor Certification Wage, in a sealed package, addressed to the City, and plainly marked "Depot Park." Bids shall be delivered, opened, and read publicly and City of Stanwood City Hall

A Proposal will be considered irregular and will be rejected if the Proposal Form furnished by the City is not used or is altered, or if the completed Proposal Form contains any unauthorized additions, deletions, alternate Bids or conditions. No oral or telephonic proposals or modifications will be considered.

Each Proposal will be accompanied by a certified check, cashier's check, postal money order, or Proposal guaranty bond, as required by RCW 47, made payable without reservations to the City, or in the case of special districts, the County Treasurer, in amount not less than five percent (5%) of the total Bid for all Schedules. Said check or bond will be held as a guaranty that the successful Bidder will, within ten (10) days from the date of notification of award, enter into a Contract and furnish an approved Performance Bond, on form attached, in an amount equal to one hundred percent (100%) of the amount of the Contract, including state sales tax.

As soon as the bid prices have been compared, the City will return the good faith token accompanying such of the Proposals, as in the City's judgment, would not be considered in making award. All other Proposal guarantees will be held until the Contract and the Bond of the successful Bidder have been executed, after which they shall be returned to the Bidders whose Proposals they accompanied.

A Contract will not be awarded until the City is satisfied that the successful Bidder is reasonably familiar with this class of work and has the necessary capital and tools to satisfactorily perform the same. The right is specifically reserved by the City to reject any or all Proposals, to accept the proposal of the lowest responsible bidder, or to re- advertise for new proposals.

The Bidder's attention is hereby directed to that portion of the Proposal that requires that the Bidder furnish information concerning their experience with work of a similar nature, equipment to be used on this Project, and general background information. Information that is incomplete, evasive, or of a general nature only shall be considered as grounds for rejection of the Bid.

Refer to Section 1-02.1 of the Special Provisions

After the date and hour set for the opening of the Bids, no Bidder may withdraw their Proposal unless the award of the Contract is delayed for a period exceeding ninety (90) days.

In the event the successful Bidder fails to furnish an approved Performance Bond, execute the Contract, and comply with all other pertinent legal requirements within ten (10) days after

Provided to Builders Exchange of WA, Inc. For usage Conditions Agreement see www.bxwa.com - Always Verify Scal

notification by the City of the award of Contract, the certified check, bank draft, or money order accompanying the Bid shall be forfeited in the amount lost by the City in making the award to the next low, responsible Bidder, but said forfeiture not to exceed five percent (5%) of the amount bid by the Contractor failing or refusing to comply with the award requirements. In the event the bid bond is tendered as a "Good Faith" token, and the awardee fails or refuses to comply with the requirements of entering a Contract on the basis of their Proposal, said Contractor and their Surety shall be likewise held liable under the Bid Bond in an amount not to exceed five percent (5%) of their Bid for losses suffered by the City in being forced to award to the new low, responsible Bidder.

No consideration will be given by the City to a claim of error in a Proposal, unless such claim is made to the City within two (2) hours after the time stated in the advertisement for receiving proposals, and unless supporting evidence of such claim, including cost breakdown sheets, is delivered to the City within three (3) hours after the time stated in the advertisements for receiving Proposals.

Bidders are expected to familiarize themselves and comply with all statutes, regulations, and ordinances that relate to their proposed work and that deal with the prevention of environmental pollution and the preservation of natural resources, including but not limited to the National Environmental Policy Act of 1969, PL 911-190, Executive Order 11514, and the State Environmental Policy Act of 1971, RCW 43.21C.

The Owner may waive any informalities or minor defects or reject any and all bids. Any bid may be withdrawn prior to the scheduled time for the opening of bids or authorized postponement thereof. Any bid received after the time and date specified shall not be considered. No bidder will be permitted to withdraw its bid between the closing time for receipt of bids and execution of the Contract, unless the award is delayed for a period exceeding sixty (60) calendar days. A conditional or qualified bid will not be accepted.

The City of Stanwood reserves the right to accept the bid that is in the best interest of the City, to postpone the acceptance of bids and the award of the Contract for a period not to exceed sixty (60) days, or to reject any and all bids. If all bids are rejected, the City may elect to re-advertise for bids. Subject to the foregoing, the contract may be awarded to the lowest responsible bidder.

The work will begin within five (5) working days after notice to proceed from the Public Works Director and shall be completed within the time as stated in the Advertisement for Bids.

The Owner may make such investigations as it deems necessary to determine the ability of the bidder to perform the work, and the bidder shall furnish to the Owner all such information and data for this purpose as the Owner may request. The Owner reserves the right to reject any bid, if the evidence submitted by, or investigation of, such bidder fails to satisfy the Owner that such bidder is properly qualified to carry out the obligations of the Contract and to complete the work contemplated therein. Subject to the foregoing, the bid award may be made to the lowest responsible bidder.

The party to whom the Contract is awarded will be required to execute the Contract and obtain the Performance and Payment Bond within ten (10) calendar days from the date the notice of award is delivered to the bidder. Such bond(s) shall be on the form provided by the Owner, specify the name, contact phone, and address of the surety, and shall include a power of attorney appointing the signatory of the bond(s) as the person authorized to execute it (them).

Provided to Builders Exchange of WA, Inc. For usage Conditions Agreement see www.bxwa.com - Always Verify Scal

BIDDER'S CHECKLIST

The following forms must be executed in full and submitted with the Bid Proposal:

1. Has the Bid Security Transmittal form been completed, either by (1) attaching a bid deposit in the form of a postal money order, cashier's check or other security and filling out the part of the form above the words "Bid Bond" or (2) a surety bond in the proper form and filling out the section of the form below the words "Bid Bond"?

2. Is the amount of the bid deposit at least five percent (5%) of the total amount of the bid?

3. Have the bid forms been properly signed?

4. Have you bid on all items?

5. If Addendum(a) have been issued, have it/they been acknowledged on the Bid Form?

6. Has the *non-collusion affidavit* been properly executed?

7. Have you shown your contractor's state license number on the Bid Form?

8. Have you listed all proposed subcontractors that you will use for the project on the Listing of Proposed Subcontractors form?

9. Have you filled out the Bidder's Construction Experience form?

10. Have you signed the **Statement of Intent to Pay Prevailing Wages**? (To be executed by the successful Bidder)

The following forms are to be executed after the Contract is awarded:

A. Contract - To be executed by the successful bidder and the City.

B. Performance and Payment Bond - To be executed on the form provided by Owner, by the successful bidder and its surety company. To include name, contact and phone number, and address of surety and power of attorney of signatory.

C. Insurance certificate(s).

Provided to Builders Exchange of WA, Inc. For usage Conditions Agreement see www.bxwa.com - Always Verify Scal

NON-COLLUSION AFFIDAVIT

STATE OF WASHINGTON

COUNTY OF_____)

The undersigned, being first duly sworn on oath, says that the bid herewith submitted is a genuine and not a sham or collusive bid, or made in the interest or on behalf of any person not therein named; and (s)he further says that the said bidder has not directly or indirectly induced or solicited any bidder on the above work or supplies to put in a sham bid, or any other person or corporation to refrain from bidding, and that said bidder has not in any manner sought by collusion to secure to him/herself an advantage over any other bidder or bidders.

_____
Signature of Bidder/Contractor

Subscribed and sworn to before me this day of_____, 2026.

Notary Public in and for the State of Washington.

Residing at _____

My Comm. Exp.:_____

Title:_____

Provided to Builders Exchange of WA, Inc. For usage Conditions Agreement see www.bxwa.com - Always Verify Scal

BIDDER'S CONSTRUCTION EXPERIENCE

Answer all questions and provide clear and comprehensive information.

1. Name of bidder: _____
   Registration Number: _____
2. Permanent main office address: _____
3. When organized: _____
4. Where incorporated: _____
5. How many years have you been engaged in the contracting business under your present firm name? _____
6. * Contracts on hand. (Schedule these, showing gross amount of each contract and the approximate anticipated dates of completion), contact name and phone number.

   _____

   _____

7. General character of work performed by your company:

   _____

8. Have you ever failed to complete any work awarded to you? If so, where, and why?

_____

_____

_____

_____

9. Have you ever defaulted on a contract? _____

10. List of three (3) major projects of similar nature which have been completed by the Contractor within the last three (3) years, the gross dollar amount and brief description ofeach project:

1. Project Name: _____

   Amount: _____

   Owner: _____

   Engineer's Name: _____

   Engineer's Phone: _____

   Description

   _____

   _____

Provided to Builders Exchange of WA, Inc. For usage Conditions Agreement see www.bxwa.com - Always Verify Scal

2. Project Name: _____

   Amount: _____

   Owner: _____
   Engineer's Name: _____
   Engineer's Phone: _____

   Description

   _____

   _____

3. Project Name: _____

   Amount: _____

   Owner: _____
   Engineer's Name: _____
   Engineer's Phone: _____

   Description

   _____

   _____

11. List your major equipment available for this contract:

    _____
    _____
    _____

12. Will you, upon request, fill out a detailed financial statement and furnish any otherinformation that may be required by the City?

* Add separate sheets if necessary.

The undersigned hereby authorizes and requests any person, firm or corporation to furnishany information requested by the City of Stanwood.

Date:_____Bidder's Signature: _____

Provided to Builders Exchange of WA, Inc. For usage Conditions Agreement see www.bxwa.com - Always Verify Scal

SUBCONTRACTOR LIST

Prepared in compliance with RCW 39.30.060 as amended

To Be Submitted with the Bid Proposal

Project Name: **Depot Park**

Failure to list subcontractors who are proposed to perform the work of heating, ventilation and air conditioning, plumbing, as described in Chapter 18.106 RCW, and electrical as described in Chapter 19.28 RCW will result in your bid being non-responsive and therefore void.

Subcontractor(s) that are proposed to perform the work of heating, ventilation and air conditioning, plumbing, as described in Chapter 18.106 RCW, and electrical as described in Chapter 19.28 RCW must be listed below. The work to be performed is to be listed below the subcontractor(s) name.

If no subcontractor is listed below, the bidder acknowledges that it does not intend to use any subcontractor to perform those items of work.

Subcontractor Name: _____

Work to be Performed: _____

Subcontractor Name: _____

Work to be Performed: _____

Subcontractor Name: _____

Work to be Performed _____

Subcontractor Name: _____

Work to be Performed _____

Subcontractor Name: _____

Work to be Performed _____

Provided to Builders Exchange of WA, Inc. For usage Conditions Agreement see www.bxwa.com - Always Verify Scal

BID Proposal

To the Honorable Mayor and Council Stanwood, Washington

BUSINESS NAME:_____

BUSINESS LICENSE NUMBER _____

UBI NUMBER _____

EMPLOYEE SECURITY DEPARTMENT NUMBER: _____

Depot Park

The undersigned has examined the site, General Stipulations, Engineering Specifications, Contract Drawings, laws, and ordinances covering the improvements contemplated. In accordance with the terms, provisions, and requirements of each of the foregoing, their respective terms and conditions are incorporated herein by this reference, and the following lump sums and unit prices are tendered as an offer to perform the work and furnish the equipment, materials, appurtenances, and guarantees, where required, complete in place and in good working order.

As evidence of good faith, cash, bid bond, cashier's check, or certified check made payable to the City Treasurer, City of Stanwood, isattached hereto. The undersigned understands and hereby agrees that, should this offer be accepted, and the undersigned fail or refuse to enter into a contract and furnish the required construction performance bond and necessary liability insurance, the undersigned will forfeit to the City an amount for the "good faith token" equal to five percent (5%) of the amount bid as liquidated damages, all as provided for in the Specifications.

The undersigned fully understands and agrees that the unit prices here submitted shall apply to the quantity actually used, regardlessof its relation to the quantity shown in the Proposal.

The undersigned freely states that he/she is familiar with the provisions of the Competitive Bidding Statutes of Washington State, specifically the provisions of RCW Chapter 9.18, and certifies that with respect to this Proposal, there has been no collusion or understanding with any other person, persons, or corporation to prevent or eliminate full and unrestricted competition upon Bidders onthis public works project.

_____ _____

Signature of Contractor's Representative Date

Provided to Builders Exchange of WA, Inc. For usage Conditions Agreement see www.bxwa.com - Always Verify Scal

Contractor

If the bidder is awarded a construction contract on this bid, the name and address of the surety who will providethe performance bond is:

Surety	Agent
Surety address	Agent Address
Surety Contact and Phone Number	Agent Contact and Phone Number

Provided to Builders Exchange of WA, Inc. For usage Conditions Agreement see www.bxwa.com - Always Verify Scal

BID SCHEDULE
Depot Park

ITEM NO	SPEC SECTION	ITEM DESCRIPTION	EST. QTY.	UNIT	UNIT PRICE	AMOUNT
1	1-04.4 SP	Minor Change	1	EST	$10,000	$10,000
2	1-05.4 SP	Roadway Surveying	1	LS		
3	1-05.18 SP	Record Drawings (Minimum Bid $1,500)	1	LS		
4	2-01 SP	Mobilization	1	LS		
5	2-03 SP	Project Temporary Traffic Control	1	LS		
6	3-01	Clearing and Grubbing	1	LS		
7	3-01 SP	Tree Removal	4	EA		
8	3-02 SP	Removal of Structures and Obstructions	1	LS		
9	3-02 SP	Removing Cement Conc. Curb and Gutter	70	LF		
10	3-02 SP	Removing Cement Conc. Sidewalk	20	SY		
11	3-02 SP	Removing Existing Drainage Structure	1	EA		
12	3-02 SP	Sawcutting Existing Pavement	190	LF		
13	3-03	Gravel Borrow Incl. Haul	17	TON		
14	3-03	Roadway Excavation Incl. Haul	100	CY		
15	3-07	Structure Excavation Class B Incl. Haul	30	CY		
16	3-10 SP	Adjust Monitoring Well to Finished Grade	4	EA		
17	4-05	Crushed Surfacing Top Course	187	TON		
18	5-04 SP	HMA Cl. 1/2" PG 58H-22	33	TON		
19	5-05 SP	Pigmented Cement Conc. Pavement	380	SY		
20	6-04 SP	Gazebo Structure	1	LS		
21	7-01 SP	Storm Drain Cleanout 8 In. Diam.	2	EA		
22	7-04 SP	Solid Wall PVC Storm Sewer Pipe 8 In. Diam.	25	LF		

Provided to Builders Exchange of WA, Inc. For usage Conditions Agreement see www.bxwa.com - Always Verify Scal

ITEM NO	SPEC SECTION	ITEM DESCRIPTION	EST. QTY.	UNIT	UNIT PRICE	AMOUNT
23	7-04 SP	Ductile Iron Storm Sewer Pipe 8 In. Diam	77	LF		
24	7-05	Concrete Inlet	2	EA		
25	7-05	Catch Basin Type 1	1	EA		
26	7-05	Connection to Drainage Structure	1	EA		
27	7-05 SP	Adjust Drainage Structure to Finished Grade	1	EA		
28	8-01	Inlet Protection	3	EA		
29	8-01 SP	Erosion Control and Water Pollution Prevention	1	LS		
30	8-02	Bark or Wood Chip Mulch	45	SY		
31	8-02	PSIPE - Golden Sedge	7	EA		
32	8-02	PSIPE - Red Carpet Rose	3	EA		
33	8-02	PSIPE - False Camellia Tree	1	EA		
34	8-02 SP	Topsoil Type A	13	CY		
35	8-04	Cement Conc. Pedestrian Curb	155	LF		
36	8-04	Cement Conc. Traffic Curb	25	LF		
37	8-04 SP	Cement Conc. Traffic Curb and Gutter - 4 In. Height	75	LF		
38	8-04 SP	Cement Conc. Valley Gutter	125	LF		
39	8-04 SP	Cement Conc. Banding	50	LF		
40	8-14 SP	Cement Conc. Sidewalk	70	SY		
41	8-14 SP	Cement Conc. Curb Ramp Type Parallel	10	SY		
42	8-19 SP	Concrete Unit Pavers	2,875	SF		
43	8-20 SP	Illumination and Electrical System	1	LS		
44	8-21	Permanent Signing	1	LS		
45	8-21 SP	Wayfinding Sign	1	EA		

Provided to Builders Exchange of WA, Inc. For usage Conditions Agreement see www.bxwa.com - Always Verify Scal

ITEM NO	SPEC SECTION	ITEM DESCRIPTION	EST. QTY.	UNIT	UNIT PRICE	AMOUNT
46	8-21 SP	Historic Board Sign	8	EA		
47	8-26 SP	Bench Swing	1	EA		
48	8-27 SP	Water Fountain	1	EA		
49	8-28 SP	Sunshade Canopy System	1	LS		
50	8-29 SP	Table	5	EA		
51	8-29 SP	Chair	20	EA		
52	8-30 SP	Raised Seat Wall	155	LF		
					Subtotal Computed Price	**$**
					Washington State Sales Tax 9.3%	**NA**
					Total Computed Price	**$**

Signature of Contractor's Representative

Date

Provided to Builders Exchange of WA, Inc. For usage Conditions Agreement see www.bxwa.com - Always Verify Scal

ADDENDA RECEIVED

The bidder hereby acknowledges that it has received Addenda Number(s): _____ to this Project Manual, Drawings, or other related contract and/or project documents. The name of the bidder submitting this bid and its business phone number and address, to which address all communications concerned with this bid and with the Contract shall be sent, are listed below.

Bidder's firm name:

_____

Complete address:

_____

Telephone No.: _____

Signed by:_____ Title: _____

Printed Name: _____

Notes:

(1) If the bidder is a partnership, so state, giving firm name under which business is transacted.
(2) If the bidder is a corporation, this bid must be executed by its duly authorized officials.

Provided to Builders Exchange of WA, Inc. For usage Conditions Agreement see www.bxwa.com - Always Verify Scal

CERTIFICATION OF COMPLIANCE WITH WAGE PAYMENT STATUTES FORM

Effective July 23, 2017, and updated in July 2019, before award of a public works contract, the bidder under consideration for award of a public works project must submit to the public agency a sworn statement that they have not willfully violated wage payment laws within the past three years in order to be considered a responsible bidder. (See RCW 39.04.350 as modified by SSB 5301, Laws of 2017, ch. 258; modified in July 2019 by SSB 5017 regarding unsworn declarations.)

CERTIFICATE OF COMPLIANCE WITH WAGE PAYMENT STATUTES

The bidder hereby certifies that, within the three-year period immediately preceding the bid solicitation date, May 16, 2023, the bidder is not a "willful" violator, as defined in RCW 49.48.082, of any provision of Chapters 49.46, 49.48, or 49.52 RCW, as determined by a final and binding citation and notice of assessment issued by the Department of Labor and Industries or through a civil judgement entered by a court of limited or general jurisdiction.

I certify under penalty of perjury under the laws of the State of Washington that the foregoing is true and correct.

_____
Bidder's Business Name

_____
Signature of Authorized Official*

_____
Printed Name

_____
Title

_____ _____ _____
Date City State

Check One:
Sole Proprietorship ☐ Partnership ☐ Joint Venture ☐ Corporation ☐

State of Incorporation, or if not a corporation, State where business entity was formed:

If a co-partnership, give firm name under which business is transacted:

**If a corporation, proposal must be executed in the corporate name by the president or vice-president (or any other corporate officer accompanied by evidence of authority to sign). If a co-partnership, proposal must be executed by a partner.*

Provided to Builders Exchange of WA, Inc. For usage Conditions Agreement see www.bxwa.com - Always Verify Scal

TITLE VI

The City of Stanwood in accordance with Title VI of the Civil Rights Act of 1964, 78 Stat. 252, 42 U.S.C. 2000d to 2000d-4 and Title 49, Code of Federal Regulations, Department of Transportation, subtitle A, Office of the Secretary, Part 21, nondiscrimination in Federally assisted programs of the Department of Transportation issued pursuant to such Act, hereby notifies all Bidders that it will affirmatively insure that in any Contract entered into pursuant to this advertisement, disadvantaged business enterprises as defined at 49 CFR Part 26 will be afforded full opportunity to submit Bids in response to this invitation and will not be discriminated against on the grounds of race, color, national origin, or sex in consideration for an Award.

Provided to Builders Exchange of WA, Inc. For usage Conditions Agreement see www.bxwa.com - Always Verify Scal

BID SECURITY TRANSMITTAL FORM

Herewith find an executed Bid Bond or a deposit in the form of a cashier's check, postal money order or other security in lieu of a bid bond in the amount of $ _____which amount is not less than five (5%) percent of the total bid.

SIGN HERE _____

BID BOND

KNOW ALL MEN BY THESE PRESENTS:

That we, _____ as Principal and _____as Surety, are held and firmly bound unto the CITY OF STANWOOD as Obligee, in the penal sum of _____ _____Dollars, for the payment of which the Principal and the Surety bind themselves, their heirs, executors, administrators, successors and assigns, jointly and severally, by these presents.

The condition of this obligation is such that if the Obligee shall make any award to the Principal for:

Depot Park

according to the terms of the bid made by the Principal, and the Principal shall duly make and enter into a contract with the Obligee in accordance with the terms of said bid and award and shall give bond for the faithful performance thereof, with Surety or Sureties approved by the Obligee; or if the Principal shall, in case of failure so to do, pay and forfeit to the Obligee the penal amount of the deposit specified in the advertisement for bids, then this obligation shall be null and void; otherwise it shall be and remain in full force and effect and the Surety shall forthwith pay and forfeit to the Obligee, as penalty and liquidated damages, the amount of this bond.

SIGNED, SEALED AND DATED THIS_____day of _____

_____
Principal

_____ _____
Surety Agent

_____ _____
Surety address Agent Address

_____ _____
Surety Contact and Phone Number Agent Contact and Phone Number

Dated: _____

Received return of deposit in the sum of $_____.

Provided to Builders Exchange of WA, Inc. For usage Conditions Agreement see www.bxwa.com - Always Verify Scal

PART 2

CONTRACT DOCUMENTS

Provided to Builders Exchange of WA, Inc. For usage Conditions Agreement see www.bxwa.com - Always Verify Scal

SAMPLE PUBLIC WORKS
CONTRACT

This Contract is made and entered into in duplicate this ____ day of _____, 2026 by and between the **CITY OF STANWOOD**, a non-charter code city of the State of Washington, hereinafter referred to as "the City", and _____, a _____, and _____, a Washington _____ ("Contractor") **[Delete this description: LEGAL STATUS OF ENTITY SHOULD BE INSERTED i.e., LLC; Sole Proprietor; LLP; Inc., P.S.; Partnership, Foreign Corporation licensed to do business in Washington State]** .

WITNESSETH:

Whereas, the City desires to have certain public work performed as hereinafter set forth, requiring specialized skills and other supportive capabilities; and

Whereas, the Contractor represents that it is qualified and possesses sufficient skills and the necessary capabilities to perform the services set forth in this Contract.

NOW, THEREFORE, in consideration of the terms, conditions, and agreements contained herein, the parties hereto agree as follows:

1. Scope of Work.

The Contractor shall do all work and furnish all tools, materials, and equipment in order to accomplish the following project:

Project Name, Project ***XX-XX***

in accordance with and as described in

A. this Contract, and

B. the Project Manual, which include the attached plans, Specifications, Special Provisions, submittal requirements, attachments, addenda (if any), Bid Form, Performance and Payment Bond, and

C. the Standard Specifications for Road, Bridge, and Municipal Construction prepared by the Washington State Department of Transportation, as may be specifically modified in the attached Specifications and/or Special Provisions, hereinafter referred to as "the standard specifications",

D. ☐ City of Stanwood Streets and Utilities Standards (referenced but not attached)

E. Other_____

F. Addenda (If any)

and shall perform any alterations in or additions to the work provided under this Contract and every part thereof.

Provided to Builders Exchange of WA, Inc. For usage Conditions Agreement see www.bxwa.com - Always Verify Scal

The Contractor shall provide and bear the expense of all equipment, work, and labor of any sort whatsoever that may be required for the transfer of materials and for constructing and completing the work provided for in this Contract, except as may otherwise be provided in the Project Manual.

2. Time for Performance and Liquidated Damages / Termination of Contract.

A. Time is of the essence in the performance of this Contract and in adhering to the time frames specified herein. The Contractor shall commence work within ten (10) calendar days after notice to proceed from the City, and said work shall be physically completed within ***insert no. days here*** working days after said notice to proceed, unless a different time frame is expressly provided in writing by the City.

B. If said work is not completed within the time for physical completion, the Contractor may be required at the City's sole discretion to pay to the City liquidated damages as set forth in the Project Manual, for each and every day said work remains uncompleted after the expiration of the specified time.

C. Termination of Contract.

1. Except as otherwise provided under this Contract, either party may terminate this Contract upon ten (10) working days' written notice to the other party in the event that said other party is in default and fails to cure such default within that ten-day period, or such longer period as provided by the non-defaulting party. The notice of termination shall state the reasons therefore and the effective date of the termination.

2. The City may also terminate this Contract in accordance with the provisions of Section 1-08.10 of the Standard Specifications.

3. Compensation and Method of Payment.

A. The City shall pay the Contractor for work performed under this Contract as detailed in the bid, as incorporated in the Project Manual.

B. Payments for work provided hereunder shall be made following the performance of such work, unless otherwise permitted by law and approved in writing by the City. No payment shall be made for any work rendered by the Contractor except as identified and set forth in this Contract.

C. Progress payments shall be based on the timely submittal by the Contractor of the City's standard payment request form.

D. Payments for any alterations in or additions to the work provided under this Contract shall be in accordance with the Request For Information (RFI) and/or Construction Change Order (CCO) process as set forth in the Project Manual. Following approval of the RFI and/or CCO, the Contractor shall submit the standard payment request form(s).

Provided to Builders Exchange of WA, Inc. For usage Conditions Agreement see www.bxwa.com - Always Verify Scal

E. The Contractor shall submit payment requests with a completed Application for Payment form, an example of which is included in the Attachments to this Contract. This form includes a lien waiver certification and shall be notarized before submission. Applications for payment not signed or notarized shall be considered incomplete and ineligible for payment consideration. The City shall initiate authorization for payment after receipt of a satisfactorily completed payment request form and shall make payment to the Contractor within approximately thirty (30) days thereafter.

4. Independent Contractor Relationship.

The relationship created by this Contract is that of independent contracting entities. No agent, employee, servant, or representative of the Contractor shall be deemed to be an employee, agent, servant, or representative of the City, and the employees of the Contractor are not entitled to any of the benefits the City provides for its employees. The Contractor shall be solely and entirely responsible for its acts and the acts of its agents, employees, servants, subcontractors, or representatives during the performance of this Contract. The Contractor shall assume full responsibility for payment of all wages and salaries and all federal, state, and local taxes or contributions imposed or required, including, but not limited to, unemployment insurance, workers compensation insurance, social security, and income tax withholding.

5. Prevailing Wage Requirements.

The Contractor shall comply with applicable prevailing wage requirements of the Washington State Department of Labor & Industries, as set forth in Chapter 39.12 RCW and Chapter 296-127 WAC. The Contractor shall document compliance with said requirements and shall file with the City appropriate affidavits, certificates, and/or statements of compliance with the State prevailing wage requirements. The Washington State Prevailing Wage Rates For Public Works Contracts, Snohomish County, incorporated in this Contract have been established by the Department of Labor & Industries and are included as an Attachment to this Contract. The Contractor shall also ensure that any subcontractors or agents of the Contractor shall comply with the prevailing wage and documentation requirements as set forth herein.

6. Indemnification and Hold Harmless.

A. The Contractor shall defend, indemnify, and hold harmless the City, its officers, officials, employees, and volunteers against and from any and all claims, injuries, damages, losses, or suits, including attorney fees, arising out of or in connection with the performance of this Contract, except for injuries and damages caused by the sole negligence of the City.

B. The Contractor's duty to indemnify the City shall not apply to liability for damages arising out of bodily injury to persons or damage to property caused by or resulting from the sole negligence of the City or its elected officials, agents, officers and/or employees.

C. The Contractor's duty to indemnify the City for liability for damages arising out of bodily injury to persons or damage to property caused by or resulting from the concurrent negligence of (a) the City and/or its elected officials, agents, officers and/or employees, and (b) the Contractor and/or its directors, officers, agents, employees, consultants, and/or subcontractors, shall apply only to the extent of

Provided to Builders Exchange of WA, Inc. For usage Conditions Agreement see www.bxwa.com - Always Verify Scal

negligence of Contractor and/or its directors, officers, agents, employees, consultants, and/or subcontractors

D. Should a court of competent jurisdiction determine that this Contract is subject to RCW 4.24.115, then, in the event of liability for damages arising out of bodily injury to persons or damages to property caused by or resulting from the concurrent negligence of the Contractor and the City, its officers, officials, employees, and volunteers, the Contractor's liability hereunder shall be only to the extent of the Contractor's negligence.

It is further specifically and expressly understood that the indemnification provided herein constitutes the Contractor's waiver of immunity under Industrial Insurance, Title 51 RCW, solely for the purposes of this indemnification. This waiver has been mutually negotiated by the parties.

E. Nothing contained in this section or Contract shall be construed to create a liability or a right of indemnification by any third party.

F. The provisions of this section shall survive the expiration or termination of this Contract.

7. Insurance.

A. **Insurance Term.**
The Contractor shall procure and maintain for the duration of the Agreement, insurance against claims for injuries to persons or damage to property which may arise, as required in this Section, without interruption from or in connection with the performance commencement of the Contractor's work through the term of the work hereunder by the Contractor, their agents, representatives, employees or subcontractors contract and for thirty (30) days after the Physical Completion date, unless otherwise indicated herein.

B. **No Limitation**
Contractor's maintenance of insurance, its scope of coverage and limits as required herein shall not be construed to limit the liability of the Contractor to the coverage provided by such insurance, or otherwise limit the City's recourse to any remedy available at law or in equity.

C. **Minimum Scope of Insurance**.
Contractors required insurance shall be of the types and coverage as stated below:

1. Automobile Liability insurance covering all owned, non-owned, hired and leased vehicles. Coverage shall be written on at least as broad as Insurance Services Office (ISO) form CA Automobile 00 01 or a substitute form providing equivalent liability coverage. If necessary, the policy shall be endorsed to provide contractual liability coverage.

2 Commercial General Liability insurance shall be written on at least as broad as ISO occurrence form CG 00 01 and shall cover liability arising from premises, operations, stop gap liability, independent contractors, products-completed operations, personal injury and advertising injury, and liability assumed under an insured contract. The Commercial General Liability insurance shall be endorsed

Provided to Builders Exchange of WA, Inc. For usage Conditions Agreement see www.bxwa.com - Always Verify Scal

to provide the per project general aggregate limit using ISO form CG 25 03 05 09 or an equivalent endorsement There shall be no exclusion for liability arising from explosion, collapse or underground property damage. The City shall be named as an additional insured under the Contractor's Commercial General Liability insurance policy with respect to the work performed for the City using ISO Additional Insured endorsement CG 20 10 10 01 and Additional Insured-Completed Operations endorsement CG 20 37 10 01 or substitute endorsements providing at least as broad of coverage.

3. Workers' Compensation coverage as required by the Industrial Insurance laws of the State of Washington

4. ☐ Required. Builders Risk insurance covering interests of the City, the Contractor, Subcontractors, and Sub-contractors in the work. Builders Risk insurance shall be on a special perils policy form and shall insure against the perils of fire and extended coverage and physical loss or damage including flood, earthquake, theft, vandalism, malicious mischief, and collapse. The Builders Risk insurance shall include coverage for temporary buildings, debris removal and damage to materials in transit or stored off-site. This Builders Risk insurance covering the work will have a deductible of $5,000 for each occurrence, which will be the responsibility of the Contractor. Higher deductibles for flood and earthquake perils may be accepted by the City upon written request by the Contractor and written acceptance by the City. Any increased deductibles accepted by the City will remain the responsibility of the Contractor. The Builders Risk insurance shall be maintained until final acceptance of the work by the City. An installation floater may be acceptable in lieu of Builders Risk for renovation projects only if approved in writing by the City.

5. ☐ Required. Contractors Pollution Liability insurance covering losses caused by pollution conditions that arise from the operations of the Contractor. Contractors Pollution Liability insurance shall be written in an amount of at least $1,000,000 per loss, with an annual aggregate of at least $1,000,000. Contractors Pollution Liability shall cover bodily injury, property damage, cleanup costs and defense including costs and expenses incurred in the investigation, defense, or settlement of claims.

If the Contractors Pollution Liability insurance is written on a claims-made basis, the Contractor warrants that any retroactive date applicable to coverage under the policy precedes the effective date of this contract; and that continuous coverage will be maintained or an extended discovery period will be exercised for a period of three (3) years beginning from the time that work under the contract is completed.

The City shall be named by endorsement as an additional insured on the Contractors Pollution Liability insurance policy.

If the scope of services as defined in this contract includes the disposal of any hazardous materials from the job site, the Contractor must furnish to the City evidence of Pollution Liability insurance maintained by the disposal site operator for losses arising from the insured facility accepting waste under this contract.

Provided to Builders Exchange of WA, Inc. For usage Conditions Agreement see www.bxwa.com - Always Verify Scal

Coverage certified to the City under this paragraph must be maintained in minimum amounts of $1,000,000 per loss, with an annual aggregate of at least $1,000,000.

Pollution Liability coverage at least as broad as that provided under ISO Pollution Liability-Broadened Coverage for Covered Autos Endorsement CA 99 48 shall be provided, and the Motor Carrier Act Endorsement (MCS 90) shall be attached.

D. **Minimum Amounts of Insurance.**
The Contractor shall maintain the following insurance limits:

1. Automobile Liability insurance with a minimum combined single limit for bodily injury and property damage of $1,000,000 per accident.

2. Commercial General Liability insurance shall be written with limits no less than $3,000,000 each occurrence, $3,000,000 general aggregate and a $2,000,000 products-completed operations aggregate limit.

3. ☐ Required. Builders Risk insurance shall be written in the amount of the completed value of the project with no coinsurance provisions.

4. ☐ Required. Contractors Pollution Liability shall be written in the amounts set forth above.

E. **City Full Availability of Contractor Limits**
If the Contractor maintains higher insurance limits than the minimums shown above, the City shall be insured for the full available limits of Commercial General and Excess or Umbrella liability maintained by the Contractor, irrespective of whether such limits maintained by the Contractor are greater than those required by this contract or whether any certificate of insurance furnished to the City evidences limits of liability lower than those maintained by the Contractor.

F. **Other Insurance Provisions.**
The Contractor's Automobile Liability, Commercial General Liability, and Builders Risk insurance policies shall be primary insurance with respect to the City. Any insurance, self-insurance, or insurance pool coverage maintained by the City shall be in excess of the Contractor's insurance and shall not contribute with it.

G. **Acceptability of Insurers.**
Insurance is to be placed with insurers with a current A.M. Best rating of not less than A:VII.

H. **Verification of Coverage.**
The Contractor shall furnish the City with original certificates and a copy of the amendatory endorsements, including but not necessarily limited to the additional insured endorsement, evidencing the Automobile Liability and Commercial General Liability insurance of the Contractor before commencement of the work. Before any exposure to loss may occur, the Contractor shall file with the City a copy of the Builders Risk insurance policy that includes all applicable conditions, exclusions, definitions, terms, and endorsements

Provided to Builders Exchange of WA, Inc. For usage Conditions Agreement see www.bxwa.com - Always Verify Scal

related to this project. Throughout the term of this Contract, upon request by the City , the Contractor shall furnish certified copies of all required insurance policies, including endorsements, required in this contract and evidence of all subcontractors' coverage.

☐ Required. Before any exposure to loss may occur, the Contractor shall file with the City a copy of the Builders Risk insurance policy that includes all applicable conditions, exclusions, definitions, terms and endorsements related to this Project.

☐ Required. Before any exposure to loss may occur, the Contractor shall file with the City a copy of the Pollution Liability insurance that includes all applicable conditions, exclusions, definitions, terms and endorsements related to this Project.

I. **Contractor's Insurance for Other Losses**.
The Contractor shall assume full responsibility for all loss or damage from any cause whatsoever to any tools, Contractor's employee owned tools, machinery, equipment, or motor vehicles owned or rented by the Contractor, or the Contractor's agents, suppliers or subcontractors as well as to any temporary structures, scaffolding and protective fences.

J. **Subcontractors.**
The Contractor shall include all subcontractors as insured under its policies or shall furnish separate certifications and endorsements for each subcontractor. All coverage for subcontractors shall be subject to all of the same insurance requirements as stated herein for the Contractor.

The Contractor shall cause each and every Subcontractor to provide insurance coverage that complies with all applicable requirements of the Contractor-provided insurance as set forth herein, except the Contractor shall have sole responsibility for determining the limits of coverage required to be obtained by Subcontractors. The Contractor shall ensure that the City is an additional insured on each and every Subcontractor's Commercial General liability insurance policy using an endorsement at least as broad as ISO Additional Insured endorsement CG 20 10 10 01 for ongoing operations and CG 20 37 10 01 for completed operations..

K. **Waiver of Subrogation.**
The Contractor and the City waive all rights against each other, any of their subcontractors, sub-subcontractors or lower tier subcontractors, agents and employees, each of the other, for damages caused by fire or other perils to the extent covered by Builders Risk insurance or other property insurance obtained pursuant to the Insurance Requirements Section of this Contract or other property insurance applicable to the work. The policies shall provide such waivers by endorsement or otherwise.

L. **Notice of Cancellation of Insurance.**
The Contractor shall provide the City and all Additional Insureds for this work with written notice of any policy cancellation within two business days of their receipt of such notice.

M. **Failure to Maintain Insurance**
Failure on the part of the Contractor to maintain the insurance as required shall constitute a material breach of contract, upon which the City may, after giving five business days' notice to the Contractor to correct the breach, immediately terminate the contract or, at its

Provided to Builders Exchange of WA, Inc. For usage Conditions Agreement see www.bxwa.com - Always Verify Scal

discretion, procure or renew such insurance and pay any and all premiums in connection therewith, with any sums so expended to be repaid to the City on demand, or at the sole discretion of the City, offset against funds due the Contractor from the City.

8. Compliance with Laws.

A. The Contractor shall comply with all applicable federal, state, and local laws, including regulations for licensing, certification, and operation of facilities and programs, and accreditation and licensing of individuals, and any other standards or criteria as set forth in the Project Manual.

B. The Contractor shall pay any applicable business and permit fees and taxes which may be required for the performance of the work.

C. The Contractor shall comply with all legal and permitting requirements as set forth in the Project Manual.

9. Non-discrimination.

During the performance of this Contract, the Contractor shall comply with all applicable equal opportunity laws and/or regulations and shall not discriminate on the basis of race, age, color, sex, sexual orientation, religion, national origin, creed, veteran status, marital status, political affiliation, or the presence of any sensory, mental or physical handicap. This provision shall include but not be limited to the following: employment, upgrading, demotion, transfer, recruitment, advertising, layoff or termination, rates of pay or other forms of compensation, selection for training, and the provision of work and services under this Contract. The Contractor further agrees to maintain notices, posted in conspicuous places, setting forth the provisions of this nondiscrimination clause. The Contractor understands that violation of this provision shall be cause for immediate termination of this Contract and the Contractor may be barred from performing any services or work for the City in the future unless the Contractor demonstrates to the satisfaction of the City that discriminatory practices have been eliminated and that recurrence of such discriminatory practices is unlikely.

A. The parties will maintain open hiring and employment practices and will welcome applications for employment in all positions from qualified individuals who are members of the above-stated minorities.

B. The parties will comply strictly with all requirements of applicable federal, state or local laws or regulations issued pursuant thereto, relating to the establishment of nondiscriminatory requirements in hiring and employment practices and assuring the service of all patrons and customers without discrimination with respect to the above-stated minority status.

10. Assignment and Subcontractors.

A. The Contractor shall not assign this Contract or any interest herein, nor any money due to or to become due hereunder, without first obtaining the written consent of the City.

B. The Contractor shall not subcontract any part of the services to be performed hereunder without first obtaining the consent of the City and complying with the

Provided to Builders Exchange of WA, Inc. For usage Conditions Agreement see www.bxwa.com - Always Verify Scal

provisions of this section.

C. In the event the Contractor does assign this contract or employ any subcontractor, the Contractor agrees to bind in writing every assignee and subcontractor to the applicable terms and conditions of the contract documents.

D. The Contractor shall, before commencing any work, notify the Owner in writing of the names of any proposed subcontractors. The Contractor shall not employ any subcontractor or other person or organization (including those who are to furnish the principal items or materials or equipment), whether initially or as a substitute, against whom the Owner may have reasonable objection. Each subcontractor or other person or organization shall be identified in writing to the Owner by the Contractor prior to the date this Contract is signed by the Contractor. Acceptance of any subcontractor or assignee by the Owner shall not constitute a waiver of any right of the Owner to reject defective work or work not in conformance with the contract documents. If the Owner, at any time, has reasonable objection to a subcontractor or assignee, the Contractor shall submit an acceptable substitute.

E. The Contractor shall be fully responsible for all acts and omissions of its assignees, subcontractors and of persons and organization directly or indirectly employed by it and of persons and organizations for whose acts any of them may be liable to the same extent that it is responsible for the acts and omissions of person directly employed by it.

F. The divisions and sections of the specifications and the identifications of any drawings shall not control the Contractor in dividing the work among subcontractors or delineating the work to be performed by any specific trade.

G. Nothing contained in the contract documents shall create or be construed to create any relationship, contractual or otherwise, between the Owner and any subcontractor or assignee. Nothing in the contract documents shall create any obligation on the part of the Owner to pay or to assure payment of any monies due any subcontractor or assignee.

H. The Contractor hereby assigns to the City any and all claims for overcharges resulting from antitrust violations as to goods and materials purchased in connection with this Contract, except as to overcharges resulting from antitrust violations commencing after the date of the bid or other event establishing the price of this Contract. In addition, the Contractor warrants and represents that each of its suppliers and subcontractors shall assign any and all such claims for overcharges to the City in accordance with the terms of this provision. The Contractor further agrees to give the City immediate notice of the existence of any such claim.

I. In addition to all other obligations of the contractor, if the contractor does employ any approved subcontractor, the contractor shall supply to every approved subcontractor a copy of the form, provided in the project manual, to establish written proof that each subcontract and lower-tier subcontract is a written

Provided to Builders Exchange of WA, Inc. For usage Conditions Agreement see www.bxwa.com - Always Verify Scal

document and contains, as a part, the current prevailing wage rates. The contractor, each approved subcontractor and each approved lower-tier subcontractor shall complete and deliver the form directly to the City.

11. Contract Administration and Notices.

This Contract shall be administered for the City by Kevin Hushagen, Public Works Director, and shall be administered for the Contractor by the Contractor's Contract Representative, Insert Name of Contractor Representative. Unless stated otherwise herein, all notices and demands shall be in writing and sent or hand-delivered to the parties at their addresses as follows:

To City:	To Contractor:
Kevin Hushagen, PW Director	Name and Title of Binding Officer
City of Stanwood	Contractor Business Name
10220 270th Street NW	Street Address
Stanwood, WA 98292	City, State ZIP
360-629-9782	Telephone Number

or to such addresses as the parties may hereafter designate in writing. Notices and/or demands shall be sent by registered or certified mail, postage prepaid, or hand-delivered. Such notices shall be deemed effective when mailed or hand-delivered at the addresses specified above.

12. Interpretation and Venue. This Contract shall be interpreted and construed in accordance with the laws of the State of Washington. The venue of any litigation between the parties regarding this Contract shall be Snohomish County, Washington.

13. Severability

A. If a court of competent jurisdiction holds any part, term or provision of this Contract to be illegal or invalid, in whole or in part, the validity of the remaining provisions shall not be affected, and the parties' rights and obligations shall be construed and enforced as if the Contract did not contain the particular provision held to be invalid.

B. If any provision of this Contract is in direct conflict with any statutory provision of the State of Washington, that provision which may conflict shall be deemed inoperative and null and void insofar as it may conflict, and shall be deemed modified to conform to such statutory provision.

14. Non-Waiver.

A waiver by either party hereto of a breach of the other party hereto of any covenant or condition of this Contract shall not impair the right of the party not in default to avail itself of any subsequent breach thereof. Leniency, delay or failure of either party to insist upon strict performance of any Contract, covenant or condition of this Contract, or to exercise any right herein given in any one or more instances, shall not be construed as a waiver or relinquishment of any such Contract, covenant, condition or right.

15. Survival.

Provided to Builders Exchange of WA, Inc. For usage Conditions Agreement see www.bxwa.com - Always Verify Scal

Any provision of this Contract which imposes an obligation after termination or expiration of this Contract shall survive the term or expiration of this Contract and shall be binding on the parties to this Contract.

16. Authority.

The person executing this Agreement on behalf of Contractor represents and warrants that he or she has been fully authorized by Contractor to execute this Agreement on its behalf and to legally bind Contractor to all the terms, performances and provisions of this Agreement. The person executing this Contractor on behalf of the City represents and warrants that he or she has been fully authorized by the City to execute this Contractor on its behalf and to legally bind the City to all the terms, performances and provisions of this Contractor.

IN WITNESS WHEREOF, the parties hereto have caused this Contract to be executed the day and year first set forth above.

IN WITNESS WHEREOF, the parties hereto have caused this Contract to be executed the day and year first hereinabove written.

CITY OF STANWOOD

By_____
Sid Roberts, Mayor

Approved as to form:

_____
Nikki Thompson, City Attorney

_____

By _____
name, title

Attest:

_____
Lisa Sokolik, City Clerk

Provided to Builders Exchange of WA, Inc. For usage Conditions Agreement see www.bxwa.com - Always Verify Scal

PERFORMANCE and PAYMENT BOND

Bond to the City of Stanwood Bond # _____

KNOW ALL MEN BY THESE PRESENTS:
That we, the undersigned, _____ as Principal, and_____ _____a corporation, organized and existing under the laws of the State of Washington, as a surety corporation, and qualified under the laws of the State of Washington to become surety upon bonds of contractors with municipal corporations as surety, are jointly and severally held and firmly bound to the **City of Stanwood** in the penal sum of $___ _____ for the payment of which sum on demand we bind ourselves and our successors, heirs, administrators or personal representatives, as the case may be.

This obligation is entered into pursuant to the statutes of the State of Washington and the ordinances of the City of Lake Stevens.

Dated at _____, Washington, this ____ day of _____, 20___.

The conditions of the above obligation are such that:

WHEREAS, the City of Stanwood has let or is about to let to the said_____ _____ the above bounded Principal, a certain contract, the said contract being numbered _____, and providing for Depot Park (which contract is referred to herein and is made a part hereof as though attached hereto), and

WHEREAS, the said Principal has accepted, or is about to accept, the said contract, and undertake to perform the work therein provided for in the manner and within the time set forth; now, therefore,

If the said Principal,_____, shall faithfully perform all of the provisions of said contract in the manner and within the time therein set forth, or within such extensions of time as may be granted under said contract, and shall pay all laborers, mechanics, subcontractors and materialmen, and all persons who shall supply said Principal or subcontractors with provisions and supplies for the carrying on of said work, and shall indemnify and hold the City of Stanwood harmless from any damage or expense by reason of failure of performance as specified in said contract or from defects appearing or developing in the material or workmanship provided or performed under said contract within a period of one year after its acceptance thereof by the City of Stanwood, then and in that event, this obligation shall be void; but otherwise, it shall be and remain in full force and effect.

Signed this ____ day of _____, 20___.

_____	_____
Surety	Principal
By_____	By_____
_____	_____
Title	Title
_____	_____
Surety Address	Agent Address
_____	_____
Surety Contact and Phone Number	Agent Contact and Phone Number

Provided to Builders Exchange of WA, Inc. For usage Conditions Agreement see www.bxwa.com - Always Verify Scal

ESCROW AGREEMENT for RETAINED PERCENTAGE

Depot Park, Project ***X***

Escrow No.: _____
City of Stanwood Contract No. _____
Completion Date: _____

TO:

THIS ESCROW AGREEMENT is for the investment of the retained percentage of the above contract, in accordance with chapter 60.28 of the Revised Code of Washington. It is limited to FDIC insured Washington State Chartered Banks who are covered by the State of Washington Public Deposit Protection Act.

The undersigned,_____, (as "Contractor"), has directed the CITY OF STANWOOD (as "City"), to deliver to you its warrants which shall be payable to you and/or the contractor. The warrants are to be held and disposed of by you in accordance with the following instruction:

INSTRUCTIONS

1. Upon delivery the warrants shall be endorsed by you and forwarded to the City for collection. You shall use the monies to purchase investments selected by the Contractor and approved by the City. You may follow the last written direction received by you from the Contractor, for each purchase, provided the direction otherwise conforms with this agreement. Acceptable investments are:
   A. Bills, certificates, notes or bonds of the United States;
   B. Other obligations of the United States or its agencies;
   C. Obligations of any corporation wholly owned by the Government of the United States;
   D. Indebtedness of the Federal National Mortgage Association;
   E. Time deposits in commercial banks;
   F. Other investments, except stocks, selected by the Contractor, subject to express prior written consent of the City.
2. The investments shall be in a form which allows you alone to reconvert them into money if you are required to do so by the City.
3. The investments must mature on or prior to the date set for the completion of the contract, including extension there of or thirty (30) days following the final acceptance of the work.
4. When interest on the investments accrues and is paid, you shall collect the interest and forward it to the Contractor unless otherwise directed by the Contractor.
5. You are not authorized to deliver to the Contractor all or any part of the investments held by you pursuant to this agreement (or any monies derived from the sale of such investments, or the negotiation of the City's warrants) **except** in accordance with the written instructions from the City. Compliance with such instructions shall relieve you of any further liability related thereto.
6. In the event the City orders you, in writing, to reconvert the investments and return all monies, you shall do so within thirty (30) days of receipt of the order.
7. The Contractor agrees to compensate you for your services in accordance with your current published schedule of applicable escrow fees. Payment of all fees shall be the sole responsibility of the Contractor and shall not be deducted from any monies placed with you pursuant to this agreement until and unless the City directs the release to the Contractor of the investments and monies held hereunder, whereupon you shall be entitled to reimburse yourself from such monies for the entire amount of your fee.
8. This agreement shall not be binding until signed by both parties and accepted by you.
9. This document contains the entire agreement between you, the Contractor, and the City, with respect to this Escrow, and you are not a party to, nor bound by any instrument or agreement other than this. You shall not be required to take notice of any default or any other matter, nor be bound by nor required to give notice or demand, nor required to take any action whatever except as herein expressly provided. You shall not be liable for any loss or damage not caused by your own negligence or willful misconduct.

CONTRACTOR

Federal Tax I.D. No. _____

By: _____

Title: _____

Address: _____

_____

DATE: _____

CITY OF STANWOOD

By: _____

Title: _____

DATE: _____

THE ABOVE ESCROW AGREEMENT RECEIVED AND ACCEPTED on the _____ day of _____ 20 .

BANK

By: _____

Title: _____

Address: _____

_____

DISTRIBUTION:
City Clerk
Financial Institution
Contractor
File Copy

Provided to Builders Exchange of WA, Inc. For usage Conditions Agreement see www.bxwa.com - Always Verify Scal

PART III

STANDARD SPECIFICATIONS

Provided to Builders Exchange of WA, Inc. For usage Conditions Agreement see www.bxwa.com - Always Verify Scal

STANDARD SPECIFICATIONS

The work on this project shall be accomplished in accordance with the *Standard Specifications for Road, Bridge and Municipal Construction*, 2026 edition, as issued by the Washington State Department of Transportation (WSDOT) and the American Public Works Association (APWA), Washington State Chapter (hereafter "Standard Specifications"). The Standard Specifications, as modified or supplemented by these Special Provisions, all of which are made a part of the Contract Documents, shall govern all of the Work.

The current version of the WSDOT Standard Specifications for Road, Bridge, and Municipal construction can be found here:

http://www.wsdot.wa.gov/Business/Construction/SpecificationsAmendmentsGSPs.htm

The Standard specifications are modified by the special provisions to the General Requirements (Division 1), presented herein and the Standard Specifications and details contained in the contract plans. Section and subsection numbers of the special provisions refer to corresponding section and subsection numbers of the Standard Specifications.

Provided to Builders Exchange of WA, Inc. For usage Conditions Agreement see www.bxwa.com - Always Verify Scal

SPECIAL PROVISIONS

Provided to Builders Exchange of WA, Inc. For usage Conditions Agreement see www.bxwa.com - Always Verify Scal

INTRODUCTION TO THE SPECIAL PROVISIONS

(January 4, 2024 APWA GSP, Option A)

The work on this project shall be accomplished in accordance with the *Standard Specifications for Road, Bridge and Municipal Construction*, 2025 edition, as issued by the Washington State Department of Transportation (WSDOT) and the American Public Works Association (APWA), Washington State Chapter (hereafter "Standard Specifications"). The Standard Specifications, as modified or supplemented by these Special Provisions, all of which are made a part of the Contract Documents, shall govern all of the Work.

These Special Provisions are made up of both General Special Provisions (GSPs) from various sources, which may have project-specific fill-ins; and project-specific Special Provisions. Each Provision either supplements, modifies, or replaces the comparable Standard Specification, or is a new Provision. The deletion, amendment, alteration, or addition to any subsection or portion of the Standard Specifications is meant to pertain only to that particular portion of the section, and in no way should it be interpreted that the balance of the section does not apply.

The GSPs are labeled under the headers of each GSP, with the effective date of the GSP and its source. For example:

(March 8, 2013 APWA GSP)
(April 1, 2013 WSDOTGSP)
(COS GSP) Agency Special Provision

Project specific special provisions are labeled without a date as such:
(*****)

Also incorporated into the Contract Documents by reference are:

- *Manual on Uniform Traffic Control Devices for Streets and Highways*, currently adopted edition, with Washington State modifications, if any
- *Standard Plans for Road, Bridge and Municipal Construction*, WSDOT Manual M21-01, current edition
- *City of Stanwood Street and Utility Standards*, City of Stanwood Public Works Department, current edition
- *City of Stanwood Municipal Code (Current Web Edition)*
- *Public Right-of-Way Accessibility Guidelines, August 8, 2023*

Contractor shall obtain copies of these publications, at Contractor's own expense.

Provided to Builders Exchange of WA, Inc. For usage Conditions Agreement see www.bxwa.com - Always Verify Scal

Division 1
General Requirements

DESCRIPTION OF WORK

(March 13, 1995 WSDOT GSP)

This Contract provides for the improvement of *** the parcel at the northwest corner of 271st Street NW and 84th Avenue W with concrete and brick pavers and site furnishings such as a gazebo, sun shade system, raised seating walls, water fountain, bench swing, amenity lighting, and signage *** and other work, all in accordance with the attached Contract Plans, these Contract Provisions, and the Standard Specifications.

1-01 Definition and Terms

1-01.3 Definitions

(January 19, 2022 APWA GSP)

Delete the heading **Completion Dates** and the three paragraphs that follow it, and replace them with the following:

Dates

Bid Opening Date
The date on which the Contracting Agency publicly opens and reads the Bids.

Award Date
The date of the formal decision of the Contracting Agency to accept the lowest responsible and responsive Bidder for the Work.

Contract Execution Date
The date the Contracting Agency officially binds the Agency to the Contract.

Notice to Proceed Date
The date stated in the Notice to Proceed on which the Contract time begins.

Substantial Completion Date
The day the Engineer determines the Contracting Agency has full and unrestricted use and benefit of the facilities, both from the operational and safety standpoint, any remaining traffic disruptions will be rare and brief, and only minor incidental work, replacement of temporary substitute facilities, plant establishment periods, or correction or repair remains for the Physical Completion of the total Contract.

Physical Completion Date
The day all of the Work is physically completed on the project. All documentation required by the Contract and required by law does not necessarily need to be furnished by the Contractor by this date.

Completion Date
The day all the Work specified in the Contract is completed and all the obligations of the Contractor under the contract are fulfilled by the Contractor. All documentation required by the Contract and required by law must be furnished by the Contractor before establishment of this date.

Final Acceptance Date
The date on which the Contracting Agency accepts the Work as complete.

Provided to Builders Exchange of WA, Inc. For usage Conditions Agreement see www.bxwa.com - Always Verify Scal

Supplement this Section with the following:

All references in the Standard Specifications or WSDOT General Special Provisions, to the terms “Department of Transportation”, “Washington State Transportation Commission”, “Commission”, “Secretary of Transportation”, “Secretary”, “Headquarters”, and “State Treasurer” shall be revised to read “Contracting Agency”.

All references to the terms “State” or “state” shall be revised to read “Contracting Agency” unless the reference is to an administrative agency of the State of Washington, a State statute or regulation, or the context reasonably indicates otherwise.

All references to “State Materials Laboratory” shall be revised to read “Contracting Agency designated location”.

All references to “final contract voucher certification” shall be interpreted to mean the Contracting Agency form(s) by which final payment is authorized, and final completion and acceptance granted.

Additive
A supplemental unit of work or group of bid items, identified separately in the Bid Proposal, which may, at the discretion of the Contracting Agency, be awarded in addition to the base bid.

Alternate
One of two or more units of work or groups of bid items, identified separately in the Bid Proposal, from which the Contracting Agency may make a choice between different methods or material of construction for performing the same work.

Business Day
A business day is any day from Monday through Friday except holidays as listed in Section 1-08.5.

Contract Bond
The definition in the Standard Specifications for “Contract Bond” applies to whatever bond form(s) are required by the Contract Documents, which may be a combination of a Payment Bond and a Performance Bond.

Contract Documents
See definition for “Contract”.

Contract Time
The period of time established by the terms and conditions of the Contract within which the Work must be physically completed.

Notice of Award
The written notice from the Contracting Agency to the successful Bidder signifying the Contracting Agency’s acceptance of the Bid Proposal.

Provided to Builders Exchange of WA, Inc. For usage Conditions Agreement see www.bxwa.com - Always Verify Scal

Notice to Proceed
The written notice from the Contracting Agency or Engineer to the Contractor authorizing and directing the Contractor to proceed with the Work and establishing the date on which the Contract time begins.

Traffic
Both vehicular and non-vehicular traffic, such as pedestrians, bicyclists, wheelchairs, and equestrian traffic.

1-02 BID PROCEDURES AND CONDITIONS

1-02.1 Prequalification of Bidders

Delete this section and replace it with the following:

1-02.1 Qualifications of Bidder
(February 17, 2026 APWA GSP, Option A)

Before award of a public works contract, a Bidder must meet at least the minimum qualifications of RCW 39.04.350(1) to be considered a responsible bidder and qualified to be awarded a public works project.

(COS GSP)

This section is supplemented with the following:

Bidders shall complete and sign the **Bidder's Construction Experience** form contained in the Proposal. Said form must be submitted with the bid proposal.

1-02.2 Plans and Specifications
(June 27, 2011 APWA GSP)

Delete this section and replace it with the following:

Information as to where Bid Documents can be obtained or reviewed can be found in the Call for Bids (Advertisement for Bids) for the work.

After award of the contract, plans and specifications will be issued to the Contractor at no cost as detailed below:

To Prime Contractor	No. of Sets	Basis of Distribution
Reduced plans (11" x 17")	2	Furnished automatically upon award.
Contract Provisions	2	Furnished automatically upon award.
Large plans (e.g., 22" x 34")	2	Furnished only upon request.

Provided to Builders Exchange of WA, Inc. For usage Conditions Agreement see www.bxwa.com - Always Verify Scal

Additional plans and Contract Provisions may be obtained by the Contractor from the source stated in the Call for Bids, at the Contractor's own expense.

1-02.4 Examination of Plans, Specifications and Site of Work

1-02.4(1) General

(December 30, 2022 APWA GSP Option A)

The first sentence of the ninth paragraph, beginning with "Prospective Bidder desiring…", is revised to read:

> Prospective Bidders desiring an explanation or interpretation of the Bid Documents, shall request the explanation or interpretation in writing soon enough to allow a written reply to reach all prospective Bidders before the submission of their Bids.

(COS GSP)

This section is supplemented with the following:

> The Contractor shall verify the locations and elevations of existing pipelines, structures, grades, and utilities prior to construction. The Contractor acknowledges that he has satisfied himself as to the nature and location of the work and the general and local conditions, including, but not limited to those bearing upon transportation, disposal, handling groundwater, access to the sites, and conflicts with pipelines and structures. The Owner assumes no responsibility for any conclusions or interpretations made by the Contractor on the basis of the information made available.
>
> The Contractor shall be responsible for any breakage of the utilities or services resulting from his operations, and shall indemnify, defend and hold the Owner and its agents harmless from any claim resulting from disruption of or damage to same.

1-02.5 Proposal Forms

(February 17, 2026 APWA GSP)

Delete this section and replace it with the following:

> The Proposal Form will identify the project and its location and describe the work. It will also list estimated quantities, units of measurement, the items of work, and the materials to be furnished at the unit bid prices. The bidder shall complete spaces on the proposal form that call for, but are not limited to, unit prices; extensions; summations; the total bid amount; signatures; date; and, where applicable, retail sales taxes and acknowledgment of addenda; the bidder's name, address, telephone number, and signature. Bids shall be in legible figures (not words) written in ink or typed and expressed in U.S. dollars. The required certifications are included as part of the Proposal Form.
>
> The Contracting Agency reserves the right to arrange the proposal forms with alternates and additives, if such be to the advantage of the Contracting Agency. The bidder shall bid on all alternates and additives set forth in the Proposal Form unless otherwise specified.

1-02.6 Preparation of Proposal

Provided to Builders Exchange of WA, Inc. For usage Conditions Agreement see www.bxwa.com - Always Verify Scal

(*February 17, 2026 APWA GSP, Option C*)

The first sentence of the second paragraph is revised to read as follows:

All prices shall be in legible figures (not words) written in ink or typed, and expressed in U.S. dollars.

Supplement the second paragraph with the following:

4. If a minimum bid amount has been established for any item, the unit or lump sum price must equal or exceed the minimum amount stated.

Delete the last two paragraphs, and replace them with the following:

The Bidder shall submit with their Bid a completed Contractor Certification Wage Law Compliance form, provided by the Contracting Agency. Failure to return this certification as part of the Bid Proposal package will make this Bid Nonresponsive and ineligible for Award. A Contractor Certification of Wage Law Compliance form is included in the Proposal Forms.

The Bidder shall make no stipulation on the Bid Form, nor qualify the bid in any manner.

A bid by a corporation shall be executed in the corporate name, by the president or a vice president (or other corporate officer accompanied by evidence of authority to sign).

A bid by a partnership shall be executed in the partnership name and signed by a partner.

A bid by a joint venture shall be executed in the joint venture name and signed by a member of the joint venture.

1-02.7 Bid Deposit

(February 17, 2026 APWA GSP)

Supplement this section with the following:

Bid bonds shall contain the following:

1. Contracting Agency-assigned number for the project;
2. Name of the project;
3. The Contracting Agency named as obligee;
4. The amount of the bid bond stated either as a dollar figure or as a percentage which represents five percent of the maximum bid amount that could be awarded;
5. Signature of the bidder's officer empowered to sign official statements. The signature of the person authorized to submit the bid should agree with the signature on the bond, and the title of the person must accompany the said signature;
6. The signature of the surety's officer empowered to sign the bond and the power of attorney.

If so stated in the Contract Provisions, bidder must use the bond form included in the Contract Provisions.

Provided to Builders Exchange of WA, Inc. For usage Conditions Agreement see www.bxwa.com - Always Verify Scal

If so stated in the Contract Provisions, cash will not be accepted for a bid deposit.

1-02.8 Noncollusion Declaration and Lobbying Certification

(COS GSP)

Supplement this section with the following:

A copy of the Noncollusion Affidavit shall be submitted with the Bidder's proposal. A copy of the required Affidavit is provided in the bid forms included with the Call for Bids (Advertisement for Bids) for this work.

1-02.9 Delivery of Proposal

(November 21, 2025 APWA GSP, Option A)

Delete this section and replace it with the following:

GENERAL

Each Proposal shall be submitted in a sealed envelope, with the Project Name and Project Number as stated in the Call for Bids clearly marked on the outside of the envelope, or as otherwise required in the Bid Documents, to ensure proper handling and delivery.

Proposals that are received as required will be publicly opened and read as specified in Section 1-02.12. The Contracting Agency will not open or consider any Bid Proposal that is received after the time specified in the Call for Bids for receipt of Bid Proposals or received in a location other than that specified in the Call for Bids. The Contracting Agency will not open or consider any "Supplemental Information" that is received after the time specified, or received in a location other than that specified in the Call for Bids.

If an emergency or unanticipated event interrupts normal work processes of the Contracting Agency so that Proposals cannot be received at the office designated for receipt of bids as specified in Section 1-02.12 the time specified for receipt of the Proposal will be deemed to be extended to the same time of day specified in the solicitation on the first work day on which the normal work processes of the Contracting Agency resume.

Supplemental bid information submitted after the Proposal submittal but within 48 hours of the time and date the Proposal is due, shall be submitted in a sealed envelope labeled the same as for the Proposal, with "Supplemental Information" added.

All other information required to be submitted with the Bid Proposal must be submitted with the Bid Proposal itself, at the time stated in the Call for Bids.

1-02.10 Withdrawing, Revising, or Supplementing Proposal

(February 17, 2026 APWA GSP)

Delete this section, and replace it with the following:

After submitting a physical or an electronic bid, if allowed under 1-02.9, Bid Proposal to the Contracting Agency, the Bidder may withdraw, revise, or supplement it if:

Provided to Builders Exchange of WA, Inc. For usage Conditions Agreement see www.bxwa.com - Always Verify Scal

1. The Bidder submits a written request signed by an authorized person and physically delivers it to the place designated for receipt of Bid Proposals, if a physical Bid Proposal was submitted, or recalled electronically via electronic method described in 1-02.9 if an electronic Bid Proposal was submitted, and
2. The Contracting Agency receives the request before the time set for receipt of Bid Proposals, and
3. The revised or supplemented Bid Proposal (if any) is received by the Contracting Agency before the time set for receipt of Bid Proposals.

If the Bidder's request to withdraw, revise, or supplement its Bid Proposal is received before the time set for receipt of Bid Proposals, the Contracting Agency will return the unopened Proposal package to the Bidder. The Bidder must then submit the revised or supplemented package in its entirety. If the Bidder does not submit a revised or supplemented package before the time set for receipt of Bid Proposals, then its bid shall be considered withdrawn.

Late revised or supplemented Bid Proposals or late withdrawal requests will be date recorded by the Contracting Agency and returned unopened. Requests to withdraw, revise, or supplement a Bid Proposal may be submitted by the following methods:

1. In person.

1-02.12 Public Opening of Proposals

(COS GSP)

Section 1-02.12 is supplemented with the following:

Date of Opening of Bids

Sealed Bids are to be received at the bid opening location prior to the time specified in the Call for Bids (Advertisement for Bids). The bid opening location, date, and time for this project is found in the Call for Bids for this work.

1-02.13 Irregular Proposals

(November 21, 2025 APWA GSP)

Delete this section and replace it with the following:

1. A Proposal will be considered irregular and will be rejected if:
   a. The Bidder is not prequalified when so required;
   b. The Bidder adds provisions reserving the right to reject or accept the Award, or enter into the Contract;
   c. A price per unit cannot be determined from the Bid Proposal;
   d. The Proposal form is not properly executed;
   e. The Bidder fails to submit or properly complete a subcontractor list as required in Section 1-02.6;
   f. The Bidder fails to submit the Bidder Questionnaire, if applicable, as required by Section 1-02.6, or if the documentation that is submitted fails to meet the requirements of the Special Provisions; or
   g. The Bid Proposal does not constitute a definite and unqualified offer to meet the material terms of the Bid invitation.

2. A Proposal may be considered irregular and may be rejected if:

Provided to Builders Exchange of WA, Inc. For usage Conditions Agreement see www.bxwa.com - Always Verify Scal

a. The Proposal does not include a unit price for every Bid item;
b. Any of the unit prices are excessively unbalanced (either above or below the amount of a reasonable Bid) to the potential detriment of the Contracting Agency;
c. The authorized Proposal Form furnished by the Contracting Agency is not used or is altered;
d. The completed Proposal form contains unauthorized additions, deletions, alternate Bids, or conditions;
e. Receipt of Addenda is not acknowledged;
f. A member of a joint venture or partnership and the joint venture or partnership submit Proposals for the same project (in such an instance, both Bids may be rejected); or
g. If Proposal form entries are not made in ink.

(COS GSP)

Supplement this section with the following:

The City specifically reserves the right to reject any and/or all Bids, and to waive minor informalities.

1-02.14 Disqualification of Bidders

(May 17, 2018 APWA GSP, Option B)

Delete this section and replace it with the following:

A Bidder will be deemed not responsible if the Bidder does not meet the mandatory bidder responsibility criteria in RCW 39.04.350(1), as amended; or does not meet Supplemental Criteria 1-7 listed in this Section.

The Contracting Agency will verify that the Bidder meets the mandatory bidder responsibility criteria in RCW 39.04.350(1), and Supplemental Criteria 1-2. Evidence that the Bidder meets Supplemental Criteria 3-7 shall be provided by the Bidder as stated later in this Section.

1. **Delinquent State Taxes**

A Criterion: The Bidder shall not owe delinquent taxes to the Washington State Department of Revenue without a payment plan approved by the Department of Revenue.

B. Documentation: The Bidder, if and when required as detailed below, shall sign a statement (on a form to be provided by the Contracting Agency) that the Bidder does not owe delinquent taxes to the Washington State Department of Revenue, or if delinquent taxes are owed to the Washington State Department of Revenue, the Bidder must submit a written payment plan approved by the Department of Revenue, to the Contracting Agency by the deadline listed below.

2. **Federal Debarment**

A Criterion: The Bidder shall not currently be debarred or suspended by the Federal government.

Provided to Builders Exchange of WA, Inc. For usage Conditions Agreement see www.bxwa.com - Always Verify Scal

B. Documentation: The Bidder shall not be listed as having an "active exclusion" on the U.S. government's "System for Award Management" database (www.sam.gov).

3. **Subcontractor Responsibility**

A Criterion: The Bidder's standard subcontract form shall include the subcontractor responsibility language required by RCW 39.06.020, and the Bidder shall have an established procedure which it utilizes to validate the responsibility of each of its subcontractors. The Bidder's subcontract form shall also include a requirement that each of its subcontractors shall have and document a similar procedure to determine whether the sub-tier subcontractors with whom it contracts are also "responsible" subcontractors as defined by RCW 39.06.020.

B. Documentation: The Bidder, if and when required as detailed below, shall submit a copy of its standard subcontract form for review by the Contracting Agency, and a written description of its procedure for validating the responsibility of subcontractors with which it contracts.

4. **Claims Against Retainage and Bonds**

A Criterion: The Bidder shall not have a record of excessive claims filed against the retainage or payment bonds for public works projects in the three years prior to the bid submittal date, that demonstrate a lack of effective management by the Bidder of making timely and appropriate payments to its subcontractors, suppliers, and workers, unless there are extenuating circumstances and such circumstances are deemed acceptable to the Contracting Agency.

B. Documentation: The Bidder, if and when required as detailed below, shall submit a list of the public works projects completed in the three years prior to the bid submittal date that have had claims against retainage and bonds and include for each project the following information:

- Name of project
- The owner and contact information for the owner;
- A list of claims filed against the retainage and/or payment bond for any of the projects listed;
- A written explanation of the circumstances surrounding each claim and the ultimate resolution of the claim.

5. **Public Bidding Crime**

A Criterion: The Bidder and/or its owners shall not have been convicted of a crime involving bidding on a public works contract in the five years prior to the bid submittal date.

B. Documentation: The Bidder, if and when required as detailed below, shall sign a statement (on a form to be provided by the Contracting Agency) that the Bidder and/or its owners have not been convicted of a crime involving bidding on a public works contract.

Provided to Builders Exchange of WA, Inc. For usage Conditions Agreement see www.bxwa.com - Always Verify Scal

6. **Termination for Cause / Termination for Default**

A Criterion: The Bidder shall not have had any public works contract terminated for cause or terminated for default by a government agency in the five years prior to the bid submittal date, unless there are extenuating circumstances and such circumstances are deemed acceptable to the Contracting Agency.

B. Documentation: The Bidder, if and when required as detailed below, shall sign a statement (on a form to be provided by the Contracting Agency) that the Bidder has not had any public works contract terminated for cause or terminated for default by a government agency in the five years prior to the bid submittal date; or if Bidder was terminated, describe the circumstances. .

7. **Lawsuits**

A Criterion: The Bidder shall not have lawsuits with judgments entered against the Bidder in the five years prior to the bid submittal date that demonstrate a pattern of failing to meet the terms of contracts, unless there are extenuating circumstances and such circumstances are deemed acceptable to the Contracting Agency

B. Documentation: The Bidder, if and when required as detailed below, shall sign a statement (on a form to be provided by the Contracting Agency) that the Bidder has not had any lawsuits with judgments entered against the Bidder in the five years prior to the bid submittal date that demonstrate a pattern of failing to meet the terms of contracts, or shall submit a list of all lawsuits with judgments entered against the Bidder in the five years prior to the bid submittal date, along with a written explanation of the circumstances surrounding each such lawsuit. The Contracting Agency shall evaluate these explanations to determine whether the lawsuits demonstrate a pattern of failing to meet of terms of construction related contracts

As evidence that the Bidder meets the Supplemental Criteria stated above, the apparent low Bidder must submit to the Contracting Agency by 12:00 P.M. (noon) of the second business day following the bid submittal deadline, a written statement verifying that the Bidder meets the supplemental criteria together with supporting documentation (sufficient in the sole judgment of the Contracting Agency) demonstrating compliance with the Supplemental Criteria. The Contracting Agency reserves the right to request further documentation as needed from the low Bidder and documentation from other Bidders as well to assess Bidder responsibility and compliance with all bidder responsibility criteria. The Contracting Agency also reserves the right to obtain information from third-parties and independent sources of information concerning a Bidder's compliance with the mandatory and supplemental criteria, and to use that information in their evaluation. The Contracting Agency may consider mitigating factors in determining whether the Bidder complies with the requirements of the supplemental criteria.

The basis for evaluation of Bidder compliance with these mandatory and supplemental criteria shall include any documents or facts obtained by Contracting Agency (whether from the Bidder or third parties) including but not limited to: (i) financial, historical, or operational data from the Bidder; (ii) information obtained directly by the Contracting

Provided to Builders Exchange of WA, Inc. For usage Conditions Agreement see www.bxwa.com - Always Verify Scal

Agency from others for whom the Bidder has worked, or other public agencies or private enterprises; and (iii) any additional information obtained by the Contracting Agency which is believed to be relevant to the matter.

If the Contracting Agency determines the Bidder does not meet the bidder responsibility criteria above and is therefore not a responsible Bidder, the Contracting Agency shall notify the Bidder in writing, with the reasons for its determination. If the Bidder disagrees with this determination, it may appeal the determination within two (2) business days of the Contracting Agency's determination by presenting its appeal and any additional information to the Contracting Agency. The Contracting Agency will consider the appeal and any additional information before issuing its final determination. If the final determination affirms that the Bidder is not responsible, the Contracting Agency will not execute a contract with any other Bidder until at least two business days after the Bidder determined to be not responsible has received the Contracting Agency's final determination.

Request to Change Supplemental Bidder Responsibility Criteria Prior To Bid: Bidders with concerns about the relevancy or restrictiveness of the Supplemental Bidder Responsibility Criteria may make or submit requests to the Contracting Agency to modify the criteria. Such requests shall be in writing, describe the nature of the concerns, and propose specific modifications to the criteria. Bidders shall submit such requests to the Contracting Agency no later than five (5) business days prior to the bid submittal deadline and address the request to the Project Engineer or such other person designated by the Contracting Agency in the Bid Documents.

1-03 Award and Execution of Contract

1-03.1 Consideration of Bids

(December 30, 2022 APWA GSP)

Revise the first paragraph to read:

After opening and reading proposals, the Contracting Agency will check them for correctness of extensions of the prices per unit and the total price. If a discrepancy exists between the price per unit and the extended amount of any bid item, the price per unit will control. If a minimum bid amount has been established for any item and the bidder's unit or lump sum price is less than the minimum specified amount, the Contracting Agency will unilaterally revise the unit or lump sum price, to the minimum specified amount and recalculate the extension. The total of extensions, corrected where necessary, including sales taxes where applicable and such additives and/or alternates as selected by the Contracting Agency, will be used by the Contracting Agency for award purposes and to fix the Awarded Contract Price amount and the amount of the contract bond.

1-03.2 Award of Contract

(COS GSP)

Section 1-03.2 is supplemented with the following:

The award of contract will be made to the lowest bidder including sales tax deemed responsive and responsible by the City for the bid schedule and whose bid conforms to the requirements of these specifications, and whose past record of performance on work of

Provided to Builders Exchange of WA, Inc. For usage Conditions Agreement see www.bxwa.com - Always Verify Scal

similar complexity and magnitude indicates that said bidder is qualified to carry out the obligations of the contract and to complete the work contemplated therein. The contracting agency reserves the right to award all work bid according to the lowest qualified responsive and responsible bid tendered, available funds, and as it best serves the interest of the contracting agency.

1-03.3 Execution of Contract

(February 17, 2026 APWA GSP, Option A)

Revise this section to read:

Copies of the Contract Provisions, including the unsigned Form of Contract, will be available for signature by the successful bidder on the first business day following award. The number of copies to be executed by the Contractor will be determined by the Contracting Agency.

Within *** 10 *** calendar days after the award date, the successful Bidder shall return the signed Contracting Agency-prepared Contract, an insurance certification as required by Section 1-07.18, a satisfactory bond as required by law and Section 1-03.4, the Transfer of Coverage form for the Construction Stormwater General Permit with sections I, III, and VIII completed when provided. Before execution of the Contract by the Contracting Agency, the successful Bidder shall provide, if required, any of the following: pre-Award information required by the Contracting Agency as listed under Section 1-02.15, proof of licensure for electrical, HVAC, or plumbing subcontractors. If the Prime Contractor lists themselves as performing electrical, HVAC, or plumbing they are required to submit proof of licensure prior to execution.

Until the Contracting Agency executes a Contract, no Proposal shall bind the Contracting Agency nor shall any Work begin within the project limits or within Contracting Agency-furnished sites. The Contractor shall bear all risks for any Work begun outside such areas and for any materials ordered before the Contract is executed by the Contracting Agency.

If the Bidder experiences circumstances beyond their control that prevents return of the Contract documents within the calendar days after the Award date stated above, the Contracting Agency may grant up to a maximum of *** 10 *** additional calendar days for return of the documents, provided the Contracting Agency deems the circumstances warrant it.

1-03.4 Contract Bond

(July 23, 2015 APWA GSP)

Delete the first paragraph and replace it with the following:

The successful bidder shall provide executed payment and performance bond(s) for the full contract amount. The bond may be a combined payment and performance bond; or be separate payment and performance bonds. In the case of separate payment and performance bonds, each shall be for the full contract amount. The bond(s) shall:

1. Be on Contracting Agency-furnished form(s);
2. Be signed by an approved surety (or sureties) that:
    a. Is registered with the Washington State Insurance Commissioner, and

Provided to Builders Exchange of WA, Inc. For usage Conditions Agreement see www.bxwa.com - Always Verify Scal

b. Appears on the current Authorized Insurance List in the State of Washington published by the Office of the Insurance Commissioner,

3. Guarantee that the Contractor will perform and comply with all obligations, duties, and conditions under the Contract, including but not limited to the duty and obligation to indemnify, defend, and protect the Contracting Agency against all losses and claims related directly or indirectly from any failure:
   a. Of the Contractor (or any of the employees, subcontractors, or lower tier subcontractors of the Contractor) to faithfully perform and comply with all contract obligations, conditions, and duties, or
   b. Of the Contractor (or the subcontractors or lower tier subcontractors of the Contractor) to pay all laborers, mechanics, subcontractors, lower tier subcontractors, material person, or any other person who provides supplies or provisions for carrying out the work;
4. Be conditioned upon the payment of taxes, increases, and penalties incurred on the project under titles 50, 51, and 82 RCW; and
5. Be accompanied by a power of attorney for the Surety's officer empowered to sign the bond; and
6. Be signed by an officer of the Contractor empowered to sign official statements (sole proprietor or partner). If the Contractor is a corporation, the bond(s) must be signed by the president or vice president, unless accompanied by written proof of the authority of the individual signing the bond(s) to bind the corporation (i.e., corporate resolution, power of attorney, or a letter to such effect signed by the president or vice president).

1-03.7 Judicial Review

(December 30, 2022 APWA GSP)

Revise this section to read:

All decisions made by the Contracting Agency regarding the Award and execution of the Contract or Bid rejection shall be conclusive subject to the scope of judicial review permitted under Washington Law. Such review, if any, shall be timely filed in the Superior Court of the county where the Contracting Agency headquarters is located, provided that where an action is asserted against a county, RCW 36.01.050 shall control venue and jurisdiction.

1-04 Scope of the Work

1-04.1 Intent of the Contract

(COS GSP)

Section 1-04.1 is supplemented with the following:

All materials, tools, labor, and guarantees thereof of required to complete the work shall be furnished and supplied in accordance with the Plans, these Special Provisions, the Standard Specifications, and City of Stanwood Standard Details. The Contractor shall include all costs of doing this work within the contract bid item prices.

Provided to Builders Exchange of WA, Inc. For usage Conditions Agreement see www.bxwa.com - Always Verify Scal

1-04.2 Coordination of Contract Documents, Plans, Special Provisions, Specifications, and Addenda

(December 30, 2022 APWA GSP)

Revise the second paragraph to read:

Any inconsistency in the parts of the contract shall be resolved by following this order of precedence (e.g., 1 presiding over 2, 2 over 3, 3 over 4, and so forth):

1. Addenda,
2. Proposal Form,
3. Special Provisions,
4. Contract Plans,
5. Standard Specifications,
6. Contracting Agency's Standard Plans or Details (if any), and
7. WSDOT Standard Plans for Road, Bridge, and Municipal Construction.

1-04.4 Minor Changes

(January 19, 2022 APWA GSP)

The first two sentences of the last paragraph of Section 1-04.4 are deleted.

1-04.4(1) Minor Changes

(May 30, 2019 APWA GSP)

Delete the first paragraph and replace it with the following:

Payments or credits for changes amounting to $10,000 or less may be made under the Bid item "Minor Change". At the discretion of the Contracting Agency, this procedure for Minor Changes may be used in lieu of the more formal procedure as outlined in Section 1-04.4, Changes. All "Minor Change" work will be within the scope of the Contract Work and will not change Contract Time.

1-04.6 Variation in Estimated Quantities

(December 30, 2022 APWA GSP Option B)

Revise the first paragraph to read:

Payment to the Contractor will be made only for the actual quantities of Work performed and accepted in conformance with the Contract. When the accepted quantity of Work performed under a unit item varies from the original Proposal quantity, payment will be at the unit Contract price for all Work unless the total accepted quantity of the Contract item, adjusted to exclude added or deleted amounts included in change orders accepted by both parties, increases or decreases by more than 25 percent from the original Proposal quantity, and if the total extended bid price for that item at time of award is equal to or greater than 10 percent of the total contract price at time of award. In that case, payment for contract work may be adjusted as described herein.

1-04.11 Final Cleanup

Provided to Builders Exchange of WA, Inc. For usage Conditions Agreement see www.bxwa.com - Always Verify Scal

(COS GSP)

Section 1-04.11 is deleted in its entirety and replaced with the following:

From time to time or as may be ordered by the Engineer, the Contractor shall cleanup and remove debris, refuse, and discarded materials of any kind resulting from the Work. Failure to do so may result in cleanup done by the Owner and the cost thereof charged to the Contractor and deducted from the Contractor's progress estimate.

The Contractor shall perform final cleanup as provided in this Section. The Engineer will not establish the Physical Completion Date until this is done. All public and private property the Contractor occupied to do the Work, including but not limited to the Street Right of Way, material sites, borrow and waste sites, and construction staging area shall be left neat and presentable. Immediately after completion of the Work, the Contractor shall cleanup and remove all refuse and unused materials of any kind resulting from the Work. Failure to do the final cleanup may result in the final cleanup being done by the Owner and the cost thereof charged to the Contractor and deducted from the Contractor's final progress estimate.

The Contractor shall:

1. Remove all rubbish, surplus materials, discarded materials, falsework, piling, camp buildings, temporary structures, equipment, and debris;
2. Remove from the Project, all unneeded, oversized rock left from grading, surfacing, or paving unless the Contract specifies otherwise, or the Engineer approves otherwise;
3. On all concrete and asphalt pavement work, flush the pavement clean and remove the wash water and debris;
4. Sweep and flush structure decks and remove wash water and debris;
5. Clean out from all open culverts and drains, inlets, catch basins, manholes and water main valve chambers, within the limits of the Project Site, all dirt and debris of any kind that is the result of the Contractor's operations;
6. Level and fine grade all excavated material not used for backfill where the Contract requires;
7. Fine grade all slopes;
8. Upon completion of grading and cleanup operations at any privately-owned site for which a written agreement between the Contractor and property owner is required, the Contractor shall obtain and furnish to the Engineer a written release from all damages, duly executed by the property owner, stating that the restoration of the property has been satisfactorily accomplished.

All costs associated with cleanup shall be incidental to the Work and shall be included in the various Bid items in the Bid, and shall be at no additional cost to the Owner.

1-05 Control of Work

1-05.4 Conformity With And Deviations From Plans And Stakes

Section 1-05.4 is supplemented with the following:

(January 13, 2021 WSDOT GSP)

Contractor Surveying - Roadway

The Contracting Agency has provided primary survey control in the Plans.

Provided to Builders Exchange of WA, Inc. For usage Conditions Agreement see www.bxwa.com - Always Verify Scal

The Contractor shall be responsible for setting, maintaining, and resetting all alignment stakes, slope stakes, and grades necessary for the construction of the roadbed, drainage, surfacing, paving, channelization and pavement marking, illumination and signals, guardrails and barriers, and signing. Except for the survey control data to be furnished by the Contracting Agency, calculations, surveying, and measuring required for setting and maintaining the necessary lines and grades shall be the Contractor's responsibility.

The Contractor shall inform the Engineer when monuments are discovered that were not identified in the Plans and construction activity may disturb or damage the monuments. All monuments noted on the plans “DO NOT DISTURB” shall be protected throughout the length of the project or be replaced at the Contractors expense.

Detailed survey records shall be maintained, including a description of the work performed on each shift, the methods utilized, and the control points used. The record shall be adequate to allow the survey to be reproduced. A copy of each day's record shall be provided to the Engineer within three working days after the end of the shift.

The meaning of words and terms used in this provision shall be as listed in "Definitions of Surveying and Associated Terms" current edition, published by the American Congress on Surveying and Mapping and the American Society of Civil Engineers.

The survey work shall include but not be limited to the following:

1. Verify the primary horizontal and vertical control furnished by the Contracting Agency, and expand into secondary control by adding stakes and hubs as well as additional survey control needed for the project. Provide descriptions of secondary control to the Contracting Agency. The description shall include coordinates and elevations of all secondary control points.

2. Establish, the centerlines of all alignments, by placing hubs, stakes, or marks on centerline or on offsets to centerline at all curve points (PCs, PTs, and PIs) and at points on the alignments spaced no further than 50 feet.

3. Establish clearing limits, placing stakes at all angle points and at intermediate points not more than 50 feet apart. The clearing and grubbing limits shall be 5 feet beyond the toe of a fill and 10 feet beyond the top of a cut unless otherwise shown in the Plans.

4. Establish grading limits, placing slope stakes at centerline increments not more than 50 feet apart. Establish offset reference to all slope stakes. If Global Positioning Satellite (GPS) Machine Controls are used to provide grade control, then slope stakes may be omitted at the discretion of the Contractor

5. Establish the horizontal and vertical location of all drainage features, placing offset stakes to all drainage structures and to pipes at a horizontal interval not greater than 25 feet.

6. Establish roadbed and surfacing elevations by placing stakes at the top of subgrade and at the top of each course of surfacing. Subgrade and surfacing stakes shall be set at horizontal intervals not greater than 50 feet in tangent sections, 25 feet in curve sections with a radius less than 300 feet, and at 10-foot intervals in

Provided to Builders Exchange of WA, Inc. For usage Conditions Agreement see www.bxwa.com - Always Verify Scal

intersection radii with a radius less than 10 feet. Transversely, stakes shall be placed at all locations where the roadway slope changes and at additional points such that the transverse spacing of stakes is not more than 12 feet. If GPS Machine Controls are used to provide grade control, then roadbed and surfacing stakes may be omitted at the discretion of the Contractor.

7. Establish intermediate elevation benchmarks as needed to check work throughout the project.

8. Provide references for paving pins at 25-foot intervals or provide simultaneous surveying to establish location and elevation of paving pins as they are being placed.

9. For all other types of construction included in this provision, (including but not limited to channelization and pavement marking, illumination and signals, guardrails and barriers, and signing) provide staking and layout as necessary to adequately locate, construct, and check the specific construction activity.

10. Contractor shall determine if changes are needed to the profiles or roadway sections shown in the Contract Plans in order to achieve proper smoothness and drainage where matching into existing features, such as a smooth transition from new pavement to existing pavement. The Contractor shall submit these changes to the Engineer for review and approval 10 days prior to the beginning of work.

The Contractor shall provide the Contracting Agency copies of any calculations and staking data when requested by the Engineer.

The Contractor shall ensure a surveying accuracy within the following tolerances:

	Vertical	Horizontal
Slope stakes	±0.10 feet	±0.10 feet
Subgrade grade stakes set 0.04 feet below grade	±0.01 feet	±0.5 feet (parallel to alignment) ±0.1 feet (normal to alignment)
Stationing on roadway	N/A	±0.1 feet
Alignment on roadway	N/A	±0.04 feet
Surfacing grade stakes	±0.01 feet	±0.5 feet (parallel to alignment) ±0.1 feet (normal to alignment)
Roadway paving pins for surfacing or paving	±0.01 feet	±0.2 feet (parallel to alignment) ±0.1 feet (normal to alignment)

Provided to Builders Exchange of WA, Inc. For usage Conditions Agreement see www.bxwa.com - Always Verify Scal

The Contracting Agency may spot-check the Contractor's surveying. These spot-checks will not change the requirements for normal checking by the Contractor.

When staking roadway alignment and stationing, the Contractor shall perform independent checks from different secondary control to ensure that the points staked are within the specified survey accuracy tolerances.

The Contractor shall calculate coordinates for the alignment. The Contracting Agency will verify these coordinates prior to issuing approval to the Contractor for commencing with the work. The Contracting Agency will require up to seven calendar days from the date the data is received.

Contract work to be performed using contractor-provided stakes shall not begin until the stakes are approved by the Contracting Agency. Such approval shall not relieve the Contractor of responsibility for the accuracy of the stakes.

Stakes shall be marked in accordance with Standard Plan A10.10. When stakes are needed that are not described in the Plans, then those stakes shall be marked, at no additional cost to the Contracting Agency as ordered by the Engineer.

Payment

Payment will be made for the following bid item when included in the proposal:

"Roadway Surveying", lump sum.

The lump sum contract price for "Roadway Surveying" shall be full pay for all labor, equipment, materials, and supervision utilized to perform the Work specified, including any resurveying, checking, correction of errors, replacement of missing or damaged stakes, and coordination efforts.

1-05.7 Removal of Defective and Unauthorized Work

Section 1-05.7, including title and subsections, is deleted and replaced with the following:

1-05.7 Nonconforming Work

(February 17, 2026 APWA GSP)

Supplement this section with the following:

The rights exercised under the provisions of this Section shall not diminish the Contracting Agency's right to pursue any other avenue for additional remedy or damages with respect to the Contractor's failure to perform the Work as required. The Engineer has the right to reject all or part of the Nonconforming Work, and the Engineer's decision is final and not subject to protest.

No additional contract time or compensation will be allowed when the Contracting Agency exercises their rights provided by this Section.

1-05.7(1) Identification of Nonconforming Work

Replace this section with the following:

Provided to Builders Exchange of WA, Inc. For usage Conditions Agreement see www.bxwa.com - Always Verify Scal

The Contractor is responsible for quality control and shall identify all Nonconforming Work. The Contracting Agency may also identify Nonconforming Work. However, failure by the Contracting Agency to identify Nonconforming Work shall not relieve the Contractor from their responsibility for the quality of the Work, nor shall it constitute acceptance or approval of the Nonconforming Work.

1-05.7(2) Reporting of Nonconforming Work

Replace this section with the following:

The Contractor shall immediately report all Nonconforming Work to the Engineer and shall include any relevant information known for suggested remediation of Nonconforming Work.

When the Contracting Agency identifies Nonconforming Work, the Engineer will notify the Contractor in writing specifying a time when a remedy must be complete. If the Contractor fails to remedy Nonconforming Work within the time specified in a written notice from the Engineer, or fails to perform any part of the Work required by the Contract Documents, the Engineer may correct and remedy such Work as may be identified in the written notice.

1-05.7(3) Remediation of Nonconforming Work

Supplement this section with the following:

The Contractor shall be responsible and bear all costs for remediating Nonconforming Work.

If the Contracting Agency remedies Nonconforming Work after the specified time when a remedy was to be completed, by any means deemed necessary, direct and indirect costs incurred by the Contracting Agency attributable to correcting and remedying Nonconforming Work not corrected by the time provided in the notice, or Work the Contractor failed or refused to perform, shall be paid by the Contractor.

If the Contractor fails to comply with a written order to remedy what the Engineer determines to be an emergency situation, the Engineer may have the Nonconforming Work corrected immediately, have the Work removed and replaced, or have Work the Contractor refuses to perform completed by using Contracting Agency or other forces. An emergency situation is any situation when, in the opinion of the Engineer, a delay in its remedy could be potentially unsafe, or might cause risk of loss or damage to the public.

When costs are incurred by the Contracting Agency, payment will be deducted by the Engineer from monies due, or to become due, to the Contractor. Such direct and indirect costs shall include in particular, but without limitation, compensation for additional professional services required, and compensation for removal, repair, replacement and/or correction of the Contractor's Nonconforming Work.

1-05.9 Equipment

(COS GSP)

The following new paragraph is inserted between the second and third paragraphs:

Use of equipment with metal tracks will not be permitted on concrete or asphalt surfaces unless otherwise authorized by the Engineer.

Provided to Builders Exchange of WA, Inc. For usage Conditions Agreement see www.bxwa.com - Always Verify Scal

1-05.10 Guarantees

(COS GSP)

Section 1-05.10 is supplemented as follows:

Guarantees and maintenance bonds shall be in accordance with City of Stanwood, State of Washington, Public Works Performance and Payment Bond forms and requirements. The performance bond shall be in the full amount of contract. The Contractor guarantees all items of material, equipment, and workmanship against mechanical, structural, or other defects for which the Contractor is responsible that may develop or become evident within a period of one year from and after acceptance of the work by the Owner. This guarantee shall be understood to require prompt remedy of defects upon written notification to the Contractor. If the Owner determines the defect requires immediate repair, the Owner may, without further notice to the Contractor, make the necessary corrections, the cost of which shall be borne by the Contractor. To support the above guarantee, the Contractor's performance bond shall remain in full force and effect for one year following the acceptance of the project by the Owner.

1-05.11 Final Inspection

Delete this section and replace it with the following:

1-05.11 Final Inspections and Operational Testing

(October 1, 2005 APWA GSP)

1-05.11(1) Substantial Completion Date

When the Contractor considers the work to be substantially complete, the Contractor shall so notify the Engineer and request the Engineer establish the Substantial Completion Date. The Contractor's request shall list the specific items of work that remain to be completed in order to reach physical completion. The Engineer will schedule an inspection of the work with the Contractor to determine the status of completion. The Engineer may also establish the Substantial Completion Date unilaterally.

If, after this inspection, the Engineer concurs with the Contractor that the work is substantially complete and ready for its intended use, the Engineer, by written notice to the Contractor, will set the Substantial Completion Date. If, after this inspection the Engineer does not consider the work substantially complete and ready for its intended use, the Engineer will, by written notice, so notify the Contractor giving the reasons therefor.

Upon receipt of written notice concurring in or denying substantial completion, whichever is applicable, the Contractor shall pursue vigorously, diligently and without unauthorized interruption, the work necessary to reach Substantial and Physical Completion. The Contractor shall provide the Engineer with a revised schedule indicating when the Contractor expects to reach substantial and physical completion of the work.

The above process shall be repeated until the Engineer establishes the Substantial Completion Date and the Contractor considers the work physically complete and ready for final inspection.

Provided to Builders Exchange of WA, Inc. For usage Conditions Agreement see www.bxwa.com - Always Verify Scal

1-05.11(2) Final Inspection and Physical Completion Date

When the Contractor considers the work physically complete and ready for final inspection, the Contractor by written notice, shall request the Engineer to schedule a final inspection. The Engineer will set a date for final inspection. The Engineer and the Contractor will then make a final inspection and the Engineer will notify the Contractor in writing of all particulars in which the final inspection reveals the work incomplete or unacceptable. The Contractor shall immediately take such corrective measures as are necessary to remedy the listed deficiencies. Corrective work shall be pursued vigorously, diligently, and without interruption until physical completion of the listed deficiencies. This process will continue until the Engineer is satisfied the listed deficiencies have been corrected.

If action to correct the listed deficiencies is not initiated within 7 days after receipt of the written notice listing the deficiencies, the Engineer may, upon written notice to the Contractor, take whatever steps are necessary to correct those deficiencies pursuant to Section 1-05.7. The Contractor will not be allowed an extension of contract time because of a delay in the performance of the work attributable to the exercise of the Engineer's right hereunder.

Upon correction of all deficiencies, the Engineer will notify the Contractor and the Contracting Agency, in writing, of the date upon which the work was considered physically complete. That date shall constitute the Physical Completion Date of the contract, but shall not imply acceptance of the work or that all the obligations of the Contractor under the contract have been fulfilled.

1-05.11(3) Operational Testing

It is the intent of the Contracting Agency to have at the Physical Completion Date a complete and operable system. Therefore when the work involves the installation of machinery or other mechanical equipment; street lighting, electrical distribution or signal systems; irrigation systems; buildings; or other similar work it may be desirable for the Engineer to have the Contractor operate and test the work for a period of time after final inspection but prior to the physical completion date. Whenever items of work are listed in the Contract Provisions for operational testing they shall be fully tested under operating conditions for the time period specified to ensure their acceptability prior to the Physical Completion Date. During and following the test period, the Contractor shall correct any items of workmanship, materials, or equipment which prove faulty, or that are not in first class operating condition. Equipment, electrical controls, meters, or other devices and equipment to be tested during this period shall be tested under the observation of the Engineer, so that the Engineer may determine their suitability for the purpose for which they were installed. The Physical Completion Date cannot be established until testing and corrections have been completed to the satisfaction of the Engineer.

The costs for power, gas, labor, material, supplies, and everything else needed to successfully complete operational testing, shall be included in the unit contract prices related to the system being tested, unless specifically set forth otherwise in the proposal.

Operational and test periods, when required by the Engineer, shall not affect a manufacturer's guaranties or warranties furnished under the terms of the contract.

Provided to Builders Exchange of WA, Inc. For usage Conditions Agreement see www.bxwa.com - Always Verify Scal

1-05.12 Final Acceptance

Add the following new section:

1-05.12(1) One-Year Guarantee Period

(March 8, 2013 APWA GSP)

The Contractor shall return to the project and repair or replace all defects in workmanship and material discovered within one year after Final Acceptance of the Work. The Contractor shall start work to remedy any such defects within 7 calendar days of receiving Contracting Agency's written notice of a defect, and shall complete such work within the time stated in the Contracting Agency's notice. In case of an emergency, where damage may result from delay or where loss of services may result, such corrections may be made by the Contracting Agency's own forces or another contractor, in which case the cost of corrections shall be paid by the Contractor. In the event the Contractor does not accomplish corrections within the time specified, the work will be otherwise accomplished and the cost of same shall be paid by the Contractor.

When corrections of defects are made, the Contractor shall then be responsible for correcting all defects in workmanship and materials in the corrected work for one year after acceptance of the corrections by Contracting Agency.

This guarantee is supplemental to and does not limit or affect the requirements that the Contractor's work comply with the requirements of the Contract or any other legal rights or remedies of the Contracting Agency.

1-05.13 Superintendents, Labor and Equipment of Contractor

(August 14, 2013 APWA GSP)

Delete the sixth and seventh paragraphs of this section.

1-05.15 Method of Serving Notices

(January 4, 2024 APWA GSP)

Revise the second paragraph to read:

All correspondence from the Contractor shall be served and directed to the Engineer. All correspondence from the Contractor constituting any notification, notice of protest, notice of dispute, or other correspondence constituting notification required to be furnished under the Contract, must be written in paper format, hand delivered or sent via certified mail delivery service with return receipt requested to the Engineer's office. Electronic copies such as e-mails or electronically delivered copies of correspondence will not constitute such notice and will not comply with the requirements of the Contract.

Add the following new section:

1-05.16 Water and Power

(October 1, 2005 APWA GSP)

Provided to Builders Exchange of WA, Inc. For usage Conditions Agreement see www.bxwa.com - Always Verify Scal

The Contractor shall make necessary arrangements, and shall bear the costs for power and water necessary for the performance of the work, unless the contract includes power and water as a pay item.

Add the following new section:

1-05.18 Record Drawings
(March 8, 2013 APWA GSP)

The Contractor shall maintain one set of full size plans for Record Drawings, updated with clear and accurate red-lined field revisions on a daily basis, and within 2 business days after receipt of information that a change in Work has occurred. The Contractor shall not conceal any work until the required information is recorded.

This Record Drawing set shall be used for this purpose alone, shall be kept separate from other Plan sheets, and shall be clearly marked as Record Drawings. These Record Drawings shall be kept on site at the Contractor's field office, and shall be available for review by the Contracting Agency at all times. The Contractor shall bring the Record Drawings to each progress meeting for review.

The preparation and upkeep of the Record Drawings is to be the assigned responsibility of a single, experienced, and qualified individual. The quality of the Record Drawings, in terms of accuracy, clarity, and completeness, is to be adequate to allow the Contracting Agency to modify the computer-aided drafting (CAD) Contract Drawings to produce a complete set of Record Drawings for the Contracting Agency without further investigative effort by the Contracting Agency.

The Record Drawing markups shall document all changes in the Work, both concealed and visible. Items that must be shown on the markups include but are not limited to:

- Actual dimensions, arrangement, and materials used when different than shown in the Plans.
- Changes made by Change Order or Field Order.
- Changes made by the Contractor.
- Accurate locations of storm sewer, sanitary sewer, water mains and other water appurtenances, structures, conduits, light standards, vaults, width of roadways, sidewalks, landscaping areas, building footprints, channelization and pavement markings, etc. Include pipe invert elevations, top of castings (manholes, inlets, etc.).

If the Contract calls for the Contracting Agency to do all surveying and staking, the Contracting Agency will provide the elevations at the tolerances the Contracting Agency requires for the Record Drawings.

When the Contract calls for the Contractor to do the surveying/staking, the applicable tolerance limits include, but are not limited to the following:

	Vertical	Horizontal
As-built sanitary & storm invert and grate elevations	± 0.01 foot	± 0.01 foot
As-built monumentation	± 0.001 foot	± 0.001 foot

Provided to Builders Exchange of WA, Inc. For usage Conditions Agreement see www.bxwa.com - Always Verify Scal

As-built waterlines, inverts, valves, hydrants	± 0.10 foot	± 0.10 foot
As-built ponds/swales/water features	± 0.10 foot	± 0.10 foot
As-built buildings (fin. Floor elev.)	± 0.01 foot	± 0.10 foot
As-built gas lines, power, TV, Tel, Com	± 0.10 foot	± 0.10 foot
As-built signs, signals, etc.	N/A	± 0.10 foot

Making Entries on the Record Drawings:

- Use erasable colored pencil (not ink) for all markings on the Record Drawings, conforming to the following color code:
- Additions - Red
- Deletions - Green
- Comments - Blue
- Dimensions- Graphite
- Provide the applicable reference for all entries, such as the change order number, the request for information (RFI) number, or the approved shop drawing number.
- Date all entries.
- Clearly identify all items in the entry with notes similar to those in the Contract Drawings (such as pipe symbols, centerline elevations, materials, pipe joint abbreviations, etc.).

The Contractor shall certify on the Record Drawings that said drawings are an accurate depiction of built conditions, and in conformance with the requirements detailed above. The Contractor shall submit final Record Drawings to the Contracting Agency. Contracting Agency acceptance of the Record Drawings is one of the requirements for achieving Physical Completion.

Payment will be made for the following bid item:

Record Drawings (Minimum Bid $1,500)	Lump Sum

Payment for this item will be made on a prorated monthly basis for work completed in accordance with this section up to 75% of the lump sum bid. The final 25% of the lump sum item will be paid upon submittal and approval of the completed Record Drawings set prepared in conformance with these Special Provisions.

A minimum bid amount has been entered in the Bid Proposal for this item. The Contractor must bid at least that amount.

1-06 Control of Material

1-06.1 Approval of Materials Prior to Use

(COS GSP)

Section 1-06.1 is supplemented with the following:

Provided to Builders Exchange of WA, Inc. For usage Conditions Agreement see www.bxwa.com - Always Verify Scal

Approval of a Material source shall not mean acceptance of the Material. The Material shall meet the requirements of the Contract.

1-06.2 Acceptance of Materials

1-06.2(1) Samples and Tests for Acceptance

(*COS GSP)*

Supplement this Section with the following:

1-06.2(1)A General

The work specified in this Section includes the control tests, test sample collection, required field-testing, and special inspections as specified herein, and indicated on the Plans.

All testing as required by this Section shall be paid for by the Contractor. All costs to prepare and implement the sample and testing program shall be included in the bid prices for the various items associated with the sampling and testing program.

Retesting and reinspection required because of defective work and testing performed for the convenience of the Contractor shall also be paid for by the Contractor.

Testing requirements shall not be cause for claims of delay by the Contractor and all expenses accruing there from shall be deemed incidental to the performance of the Contract. The Contractor shall be responsible for all material testing specified in the Contract Documents and any applicable permits and codes. The materials testing laboratory shall be accredited for performing the various testing methods either by AASHTO R18, AASHTO, 150/IEC 17025 or the American Association for Laboratory Accreditation and further approved by the City. The materials testing laboratory shall send test results directly to the Engineer.

1-06.2(1)B Test Methods

Earthwork and Materials

Compaction Control

Optimum moisture content and maximum density tests shall be determined by the following method:

ASTM D1557 – Laboratory Compaction Characteristics of Soil Using Modified Effort

In-Place Tests

In-place density and moisture content tests shall be made by an independent testing laboratory according to the following messages:

ASTM D693 – Standard Test Method for In-Place Density and Water Content of Soil and Soil-Aggregate by Nuclear Methods (Shallow Depth).

Aggregates

All aggregates shall be tested in accordance with applicable WSDOT test include:

Title	Test Method
Sampling	AASHTO T2
Sieve Analysis of Fine and Coarse Aggregates	104A

Provided to Builders Exchange of WA, Inc. For usage Conditions Agreement see www.bxwa.com - Always Verify Scal

Material Finer than No. 200 Sieve Aggregates	102A
Percentage of Particles Smaller than 0.025 mm and 0.005 mm	603A
Organic Impurities	111A
Abrasion of Coarse Aggregates by Use of the Los Angeles Machine	101A
Sand Equivalent	109A

Cast-In-Place Concrete

Cast-in-place concrete shall be tested in accordance with applicable parts of Chapter 16 of ACI 301. Concrete reinforcement and concrete special instructions shall be performed in accordance with local Building Official and WABO requirements.

Hot Mix Asphalt

Paving asphalt shall be tested in accordance with the following WSDOT test methods:

Characteristics	Test Method
Tests on Residue from RTFC Procedure	208
Absolute Viscosity at 140 degrees F, poise	203
Kinematic Viscosity at 275 degrees F, cSt, min.	202
Penetration at 77 degrees F, 100g/5 sec., min.[1]	201
Percent of Original Penetration at 77 degrees F, min.	2
Ductibility at 45 degrees F, cm, min.	
Flashpoint, (Cleveland Open Cup), degrees F min. (test on original asphalt)	206
Solubility in Tricholoroethylene percent, min. (test on original asphalt)	214

[1] Original penetration, as well as penetration after KTFC loss shall be determined by AASHTO Test Method T 49.

Complete Extractive of Uncompacted Mix

Test Methods shall be in accordance with the following:

1. AASHTO T68
2. ASTM D2172
3. AASHTO T30

Density of Compacted Mix

Test method shall be in accordance with AASHTO T166.

1. The Contractor shall employ an independent testing laboratory approved by the City to conduct complete extraction tests on the uncompacted asphalt concrete pavement mix.
2. The Contractor shall provide the Engineer with an affidavit from the asphalt supplier of the characteristics of the paving asphalt. The paving asphalt shall be tested in accordance with WSDOT Construction Manual and Standard Specifications, latest editions.

1-06.2(1)C Sampling and Testing Frequency

The Contractor shall provide the following quality control tests at the number and frequency described herein. On-site testing technicians and testing laboratories shall

Provided to Builders Exchange of WA, Inc. For usage Conditions Agreement see www.bxwa.com - Always Verify Scal

be WABO-certified. The precise location of the tests shall be designated by the Engineer. The Contractor shall cooperate with laboratory personnel employed to conduct the density testing, sampling of material(s), and special inspections. The Contractor shall provide safe access within the work site for laboratory personnel such that density testing and visual inspection can be performed. The Contractor shall provide samples of materials to be tested in the quantities required and herein specified to the appropriate laboratory personnel. The Contractor shall furnish all labor, equipment, tools, and materials necessary to obtain and deliver samples as herein designated. The Contractor shall also provide and repair any test holes required in order to facilitate the testing and sampling and to provide for the testing laboratory's exclusive use for storage and curing of test samples until removed to the laboratory.

Any areas tested and further failing compliance with the Specifications shall be recompacted and retested at the Contractor's expense, until a successful density test indicating compliance with these Specifications has been achieved.

Soil Testing

The following soil quality control tests shall be completed at the given frequency:

Material	Test	Minimum Sampling & Testing Frequency
Backfill for foundations, walls, trenches and roads	Gradation[1]	One for each type of fill material with quantities exceeding 25 cy.
	In-Place Density[2, 3, 4]	One every 250 cy or one per day for each type of soil or fill material with quantities exceeding 25 cy. For trenches, one per day and one every 250 feet of trench.
	Moisture-Density Relationship[3]	One prior to start of backfilling operation, one every 20 densities and any time material type changes.
Pipe Bedding	Gradation[1]	One – Certification may be substituted for WSDOT-approved stackpiles.
Subgrade and Fills	In-Place Density[2, 3]	One every 250 cy of each type material.
	Moisture-Density Relationship	One for every 20 densities for each material
	Gradation	One for every moisture-density

[1] All acceptance tests shall be conducted from in-place samples.
[2] Additional tests shall be conducted when variations occur due to the Contractors, operations, weather conditions, site conditions, etc.
[3] The nuclear densometer, if properly calibrated, may be used but only to supplement the required testing frequency and procedures. The densometer shall be calibrated and is recommended for use when the time for complete results becomes critical.
[4] Depending on soil conditions, it is anticipated that compaction tests shall be required at depths of 2 feet above the pipe and at each additional 5 feet to the existing surface plus a test at the surface.

Hot Mix Asphalt

The following hot mix asphalt quality control tests shall be completed at the given frequency:

Provided to Builders Exchange of WA, Inc. For usage Conditions Agreement see www.bxwa.com - Always Verify Scal

Material	Test	Minimum Sampling & Testing Frequency
Mix Design (By Contractor)	Submittal	Design Mix (include test results). Aggregate (each size) – 100 pounds. Asphalt – 1 gallon. Mineral Filler – 10 pounds
Asphalt (including prime and tack coat)	Sample and Tests	Submit material certifications with test results for each shipment or lot of asphalt.
Aggregates (from bins or source)	Gradation	Submit material certifications with test results for each shipment or lot of asphalt.
	Featured Faces	Same as gradation
	L.A. Abrasion	Same as gradation
	Specific Gravity	Same as gradation
Hot Mix Asphalt (including Asphalt Treated Base)	Marshall Method Test	One initial test during mix design and one per 3,000 tons thereafter.
	Specific Gravity	One per each Marshall test.
	Compaction	One per 50 Tons with not less than two per day.

Concrete

All testing shall conform to applicable portions of ACI. Special inspections of concrete and concrete reinforcement shall comply with WABO requirements.

All concrete must meet the specified requirements for minimum 28-day compressive strength.

All concrete cylinders shall be molded and tested for strength by an independent testing laboratory employed by the Contractor.

The Contractor shall furnish all concrete required for molding of the cylinders. In cases where cylinders are stored at the project site, the Contractor shall provide storage and protection for the cylinders in accordance with ACI requirements.

Concrete tests and testing frequency shall be in accordance with the more stringent of the testing requirements specified in Section 03300-3.17 of these Specifications, and the following table:

Material	Test	Minimum Sampling & Testing Frequency
Coarse Aggregate (for each grading size)[1]	Gradation	Submit material certifications with test results for each shipment or lot of asphalt.
	Deleterious Substances	Same as gradation.
	L.A. Abrasion	Same as gradation.
	Moisture specific gravity and absorption[1]	One initially and every 250 cy thereafter. One moisture to be conducted prior to any batching and more frequently if hauling and

Provided to Builders Exchange of WA, Inc. For usage Conditions Agreement see www.bxwa.com - Always Verify Scal

Material	Test	Minimum Sampling & Testing Frequency
		storage does not provide a consistent moisture content
Fine Aggregate[1]	Gradation and fineness modules	Same as course aggregate.
	Deleterious Substances	Same as course aggregate.
	Moisture, specific gravity and absorption[1]	Same as course aggregate.
Concrete	Slump	Conduct one test every day of placement and on additional test for every 50 cy placed and more frequently if batching appears inconsistent. Conduct in conjunction with taking concrete cylinders.
	Entrained Air	Conduct with each slump test.
	Ambient and concrete temperatures	Conduct with each slump test.
Concrete	Compressive strength and evaluation of results per ACI 214. (Includes unit weight of cylinder).	For all concrete placement, take one set of five cylinders per day and one additional set of cylinders for every 50 cy of each class of structural concrete. Cylinders shall be 4 inch by 8 inch. Test one cylinder at 7 days and three at 28 days. Fifth cylinder shall be held in reserve. A plot and statistical evaluation shall be maintained in accordance with ACI 214 for compressive strength results. Field cure cylinders shall be made when in situ strengths are required to be known.

[1]Aggregate moisture tests are to be conducted in conjunction with concrete strength tests for water/cement (w/c) calculations.

Add the following new section:

1-06.7 Shop Drawings and Submittals

(COS GSP)

Where a time constraint is required for notifications, the referenced time limitation shall begin on the first business day following receipt of the notification.

1-06.7(1) General

Shop drawing and submittal review by the City or City's representative will be limited to general design requirements only, and shall not relieve the Contractor from

Provided to Builders Exchange of WA, Inc. For usage Conditions Agreement see www.bxwa.com - Always Verify Scal

responsibility for errors or omissions or responsibility for consequences due to deviations from the Contract Documents. No changes may be made in any submittal after it has been reviewed except with written notice and approval from the City.

The Contractor shall review each submittal and provide approval in writing or by stamping, with a statement indicating that the Contractor has reviewed and approved the submittal, verified dimensional information, materials, catalog numbers, and similar data, confirmed that specified criteria has been met, and acknowledges that the product, method, or information will function as intended.

Shop drawing and submittal data for each item shall contain sufficient information on each item to determine if it is in compliance with the contract requirements.

The City will provide review services for a first and second review of each submittal item free of charge to the Contractor. The cost to provide additional reviews shall be charged to the Contractor by withholding the appropriate amounts from each progress payment.

Shop drawing and submittal items that have been installed in the work but have not been approved through the review process shall be removed, and an approved product shall be furnished, all at the Contractor's expense. Under no circumstances shall payment be made to the Contractor for materials not approved through the submittal process.

1-06.7(2) Required Information

All submittals shall include a cover sheet as provided by the City. Shop drawings and submittals shall contain the following information for all items:

a. Project Name
b. Contractor
c. Engineer
d. City
e. Applicable specification and drawing reference
f. Associated Bid item
g. Dimensions and weights
h. Catalog information
i. Manufacturer's specifications
j. Special handling instructions
k. Maintenance requirements
l. Wiring and control diagrams
m. List of contract exceptions
n. Other information as required by the Engineer
o. Installation and Operating Instructions

1-06.7(3) Review Schedule

Provided to Builders Exchange of WA, Inc. For usage Conditions Agreement see www.bxwa.com - Always Verify Scal

Shop drawings and submittals will be reviewed as promptly as possible and transmitted to Contractor not later than 10 working days after receipt by the Engineer. The Contractor shall revise and resubmit previously rejected submittals as necessary to obtain approval. Delays caused by the need for resubmittal may not be a basis for an extension of contract time or delay damages at the discretion of the City. One set of electronic shop drawings will be returned to the Contractor via email after review.

1-06.7(4) Substitutions

Any product or construction method that does not meet these specifications will be considered a substitution. Substitutions must be approved prior to their installation or use on this project.

1-06.7(5) After Contract Execution

Within 10 working days after the date of the Notice of Award of Contract, City will consider formal requests from Contractor for substitution of product in place of those specified. Contractor shall submit one electronic copy of request for substitution to the email address specified above. Data shall include the necessary change in construction methods, including a detailed description of proposed method and related drawings illustrating methods. An itemized comparison of proposed substitution with product or method shall be provided.

In making a request for substitution, Contractor represents that he/she has personally investigated the proposed product or method and has determined that it is equal or superior to, in all respects, the product specified. All substitutions shall be reviewed and approved by the City prior to incorporation into the project. Upon review and acceptance by the City, Contractor shall coordinate installation of accepted substitutions into the work, making changes that may be required for work to be completed. Contractor waives all claims for additional costs related to substitutions that consequently become apparent.

1-07 Legal Relations and Responsibilities to the Public

1-07.1 Laws to be Observed

(COS GSP)

Section 1-07.1 is supplemented with the following:

The Contractor shall at all times eliminate noise to the maximum practicable extent. Air compressing plants shall be equipped with silencers, and the exhaust of all gasoline motors or other power equipment shall be provided with mufflers. Special care shall be used to avoid noise or other nuisances, and the Contractor shall strictly observe all federal, state, and local regulations concerning noise.

Compliance with Laws

The Contractor shall comply with the requirements of all other City ordinances, state statutes, laws, and regulations, whether or not stated herein, which are specifically applicable to the public improvements and work to be performed.

Provided to Builders Exchange of WA, Inc. For usage Conditions Agreement see www.bxwa.com - Always Verify Scal

Contractor's Safety Responsibilities

These construction documents and the joint and several phases of construction hereby contemplated are to be governed at all times by applicable provisions of the federal law(s), including but not limited to the latest amendments of the following:

Williams-Steiger Occupational Safety and Health Act of 1980, Public Law 91-596.

Part 1910 - Occupational Safety and Health Standards, Chapter XVII of Title 29, Code of Federal Regulations.

This project, the Contractor and its subcontractors, shall, at all times, be governed by Chapter XIII of Title 29, Code of Federal Regulations, Part 1518 - Safety and Health Regulations for Construction (35 CFR 75), as amended to date.

To implement the program, and to provide safe and healthful working conditions for all persons, the construction superintendent or his/her designated safety officer shall conduct general project safety meetings at the site at least once each month during the course of construction.

The prime contractor and all subcontractors shall immediately report all accidents, injuries, and health hazards to the Manager, in writing. This shall not obviate any mandatory reporting under the provisions of the Occupational Safety and Health Act of 1970. This program shall become a part of the contract documents and the contract between the Owner and the Contractor, and all subcontractors, as though fully written therein.

Where the location of the work is in proximity to overhead wires and power lines, the Contractor shall coordinate all work with the utility and shall provide for such measures as may be necessary for the protection of the workers.

(October 1, 2005 APWA GSP)

Supplement this section with the following:

In cases of conflict between different safety regulations, the more stringent regulation shall apply.

The Washington State Department of Labor and Industries shall be the sole and paramount administrative agency responsible for the administration of the provisions of the Washington Industrial Safety and Health Act of 1973 (WISHA).

The Contractor shall maintain at the project site office, or other well known place at the project site, all articles necessary for providing first aid to the injured. The Contractor shall establish, publish, and make known to all employees, procedures for ensuring immediate removal to a hospital, or doctor's care, persons, including employees, who may have been injured on the project site. Employees should not be permitted to work on the project site before the Contractor has established and made known procedures for removal of injured persons to a hospital or a doctor's care.

Provided to Builders Exchange of WA, Inc. For usage Conditions Agreement see www.bxwa.com - Always Verify Scal

The Contractor shall have sole responsibility for the safety, efficiency, and adequacy of the Contractor's plant, appliances, and methods, and for any damage or injury resulting from their failure, or improper maintenance, use, or operation. The Contractor shall be solely and completely responsible for the conditions of the project site, including safety for all persons and property in the performance of the work. This requirement shall apply continuously, and not be limited to normal working hours. The required or implied duty of the Engineer to conduct construction review of the Contractor's performance does not, and shall not, be intended to include review and adequacy of the Contractor's safety measures in, on, or near the project site.

1-07.2 State Taxes

Delete this section, including its sub-sections, in its entirety and replace it with the following:

1-07.2 State Sales Tax

(June 27, 2011 APWA GSP)

The Washington State Department of Revenue has issued special rules on the State sales tax. Sections 1-07.2(1) through 1-07.2(3) are meant to clarify those rules. The Contractor should contact the Washington State Department of Revenue for answers to questions in this area. The Contracting Agency will not adjust its payment if the Contractor bases a bid on a misunderstood tax liability.

The Contractor shall include all Contractor-paid taxes in the unit bid prices or other contract amounts. In some cases, however, state retail sales tax will not be included. Section 1-07.2(2) describes this exception.

The Contracting Agency will pay the retained percentage (or release the Contract Bond if a FHWA-funded Project) only if the Contractor has obtained from the Washington State Department of Revenue a certificate showing that all contract-related taxes have been paid (RCW 60.28.051). The Contracting Agency may deduct from its payments to the Contractor any amount the Contractor may owe the Washington State Department of Revenue, whether the amount owed relates to this contract or not. Any amount so deducted will be paid into the proper State fund.

1-07.2(1) State Sales Tax — Rule 171

WAC 458-20-171, and its related rules, apply to building, repairing, or improving streets, roads, etc., which are owned by a municipal corporation, or political subdivision of the state, or by the United States, and which are used primarily for foot or vehicular traffic. This includes storm or combined sewer systems within and included as a part of the street or road drainage system and power lines when such are part of the roadway lighting system. For work performed in such cases, the Contractor shall include Washington State Retail Sales Taxes in the various unit bid item prices, or other contract amounts, including those that the Contractor pays on the purchase of the materials, equipment, or supplies used or consumed in doing the work.

1-07.2(2) State Sales Tax — Rule 170

WAC 458-20-170, and its related rules, apply to the constructing and repairing of new or existing buildings, or other structures, upon real property. This includes, but is not limited to, the construction of streets, roads, highways, etc., owned by the state of Washington; water

Provided to Builders Exchange of WA, Inc. For usage Conditions Agreement see www.bxwa.com - Always Verify Scal

mains and their appurtenances; sanitary sewers and sewage disposal systems unless such sewers and disposal systems are within, and a part of, a street or road drainage system; telephone, telegraph, electrical power distribution lines, or other conduits or lines in or above streets or roads, unless such power lines become a part of a street or road lighting system; and installing or attaching of any article of tangible personal property in or to real property, whether or not such personal property becomes a part of the realty by virtue of installation.

For work performed in such cases, the Contractor shall collect from the Contracting Agency, retail sales tax on the full contract price. The Contracting Agency will automatically add this sales tax to each payment to the Contractor. For this reason, the Contractor shall not include the retail sales tax in the unit bid item prices, or in any other contract amount subject to Rule 170, with the following exception.

Exception: The Contracting Agency will not add in sales tax for a payment the Contractor or a subcontractor makes on the purchase or rental of tools, machinery, equipment, or consumable supplies not integrated into the project. Such sales taxes shall be included in the unit bid item prices or in any other contract amount.

1-07.2(3) Services

The Contractor shall not collect retail sales tax from the Contracting Agency on any contract wholly for professional or other services (as defined in Washington State Department of Revenue Rules 138 and 244).

1-07.6 Permits and Licenses

Section 1-07.6 is supplemented with the following:

(COS GSP)

Business License

Contractor and subcontractors must obtain a City of Stanwood business license. The Contractor may apply for a city business license at https://stanwoodwa.org/488/Business-Licensing.

1-07.7 Load Limits

Section 1-07.7 is supplemented with the following:

(March 13, 1995 WSDOT GSP)

If the sources of materials provided by the Contractor necessitates hauling over roads other than State Highways, the Contractor shall, at the Contractor's expense, make all arrangements for the use of the haul routes.

1-07.8 High Visibility Apparel

1-07.8 (1) Traffic Control Personnel

Section 1-07.8(1) is revised to read:

(September 16, 2025 WSDOT GSP)

Provided to Builders Exchange of WA, Inc. For usage Conditions Agreement see www.bxwa.com - Always Verify Scal

All personnel performing the Work described in Section 2-04 (including traffic control supervisors, flaggers, and others performing traffic control labor of any kind) shall comply with the following:

1. During daylight hours with clear visibility, workers shall wear a high-visibility ANSI/ISEA 107 Type R Class 2 or 3 garment with background material that are fluorescent yellow-green, fluorescent orange-red, or fluorescent red in color; and a high visibility hardhat that is white, yellow, yellow-green, orange, or red in color; and

2. During hours of darkness (½ hour before sunset to ½ hour after sunrise) or other low-visibility conditions (snow, fog, etc.), workers shall wear a high-visibility ANSI/ISEA 107 Type R Class 2 or 3 garment with background material that are fluorescent yellow-green, fluorescent orange-red, or fluorescent red in color; a high-visibility lower garment meeting ANSI/ISEA 107 Class E, and a high visibility hardhat marked with at least 12 square inches of retroreflective material applied to provide 360 degrees of visibility.

1-07.9 Wages

1-07.9(5) Required Documents

(February 17, 2026 APWA GSP, Option B)

Revise this section to read:

All Statements of Intent to Pay Prevailing Wages and Affidavits of Wages Paid shall be submitted to the Engineer through the State L&I online Prevailing Wage Intent & Affidavit (PWIA) system. When apprenticeship is a requirement of the Contract, include all apprentices in PWIA.

1-07.11 Requirements for Nondiscrimination

1-07.11(2) Contractual Requirements

(November 25, 2024 APWA GSP)

Delete item 11 of the first paragraph of Section 1-07.11(2).

1-07.14 Responsibility for Damage

(COS GSP)

Section 1-07.14 is supplemented with the following:

The Contractor further agrees that it is waiving immunity under Industrial Insurance Law Title 51 RCW for any claims brought against the City by its employees. In the event Contractor fails, after receipt of timely notice from the City, to appear, defend, or pay as required by the first paragraph of this section, then in that event and in that event only, the City may in its sole discretion, deduct from the progress payments to the Contractor and pay any amount sufficient to pay any claim, of which the City may have knowledge and regardless of the informalities of notice of such claim, arising out of the performance of

Provided to Builders Exchange of WA, Inc. For usage Conditions Agreement see www.bxwa.com - Always Verify Scal

this contract, provided the City has theretofore given notice of receipt of such claim to the Contractor and the Contractor has failed to act thereon.

1-07.15 Temporary Water Pollution Prevention

(*COS GSP*)

Section 1-07.15 is revised as follows:

Temporary Water Pollution/Erosion Control work shall consist of temporary control measures as shown on the plans, specified in these Special Provisions and Standard Specifications, or as directed by the Engineer. This work is intended to provide prevention, control, and abatement of water pollution, and to minimize damage to adjacent properties and streams or other bodies of water.

Where directed by the Engineer and as shown on the plans, the Contractor shall construct inlet protection fabric over catch basins, filter fabric or silt fences to treat runoff prior to discharge from the work site.

Additional work as directed by the Engineer and not shown on the Plans shall be compensated as set forth in Standard Specifications Section 1-09.6.

Silt fence or filter fabric fence and inlet protection shall be constructed per the details provided in the plans and in accordance with Section 8-01 of the Standard Specifications. The Contractor shall be responsible for maintaining, removing, and disposing of all temporary Water Pollution/Erosion control items.

1-07.17 Utilities and Similar Facilities

The second sentence of the seventh paragraph is replaced with the following:

No additional compensation will be made to the Contractor for reason of delay caused by actions of any utility company and the Contractor shall consider such costs to be incidental to the other items of the contract.

Section 1-07.17 is further supplemented with the following:

Locations and dimensions shown in the Plans for existing facilities are in accordance with available information obtained without uncovering, measuring, or other verification.

The Contractor is alerted to the existence of Chapter 19.122 RCW, a law relating to underground utilities. Any cost to the Contractor incurred as a result of this law shall be at the Contractor's expense. No excavation shall begin until all known facilities in the vicinity of the excavation area have been located and marked.

The Contractor shall give advance notice to all utility companies involved where work is to take place and in all other respects comply with the provisions of Chapter 19.122 RCW. Notice shall include, but not be limited to, the following utility companies:

1. Water, sewer, storm, streets – minimum two working days in advance

Provided to Builders Exchange of WA, Inc. For usage Conditions Agreement see www.bxwa.com - Always Verify Scal

2. Power (Electric and Natural Gas) – minimum 48 hours in advance
3. Telephone – minimum 30 days in advance
4. Natural Gas – minimum 48 hours in advance
5. Cable Television – minimum 48 hours in advance
6. Transit – minimum 10 working days in advance

The following is a list of some utilities serving the Stanwood area. This is not intended or represented to be a complete list and is provided for the Contractor's convenience.

Utility	***Agency/ Company***	***Address***	***Contact***	***Phone***
Water/ Sanitary Sewer/ Storm Sewer	City of Stanwood	10220 270th Street NW Stanwood, WA 98292	Kevin Hushagen	(360) 629-9782
Natural Gas	Cascade Natural Gas	1520 South 2nd Street Mt. Vernon, WA 98273	Addam Sad	(360) 336-3866
Telephone	Frontier	13923 Smokey Point Blvd, Marysville, WA 98271	Wayne Wendell	(360) 757-3406
Telephone	Astound		Casey Kolling	(425) 754-6317
Power	Snohomish County PUD No. 1	9124 270th Street NW Stanwood, WA 98292	David Stunz	(360) 329-5713

Note that most utility companies may be contacted for locations through the "One Call" system, 1-800-424-5555. In the event of a gas emergency, call 911

The Contractor shall coordinate the Work with these utilities and shall notify the Engineer in advance of any conflicts affecting the Work schedule. The utility companies shall witness or perform all shutdowns, connections or disconnections.

Wherever in the course of the construction operation it becomes necessary to cause an outage of utilities, it shall be the Contractor's responsibility to notify the affected users not less than twenty-four (24) hours in advance of the creation of such outage. The Contractor shall make reasonable effort to minimize the duration of outages.

The Contractor shall be responsible for any breakage of utilities or services resulting from its operations and shall hold the Contracting Agency and its agents harmless from any claims resulting from disruption of, or damage to, same.

Provided to Builders Exchange of WA, Inc. For usage Conditions Agreement see www.bxwa.com - Always Verify Scal

Other Notifications

Service Area Turn Off: All service area turn off notices must be distributed to affected parties two working days in advance of any scheduled shut off. City to provide door hangers and affected service area map. The contractor shall fill in all required information prior to hanging door hanger.

Entry onto Private Property: Each property owner shall be given 48 hours advance written notice prior to entry by the Contractor.

1-07.17(2) Utility Construction, Removal or Relocation by Others

(COS GSP)

Section 1-07.17(2) is supplemented with the following:

> Under no circumstances will discrepancies in location or incompleteness in description of existing utilities or improvements, whether they are visible from the surface, buried, or otherwise obscured, be considered as a basis for additional compensation to the Contractor.

Potholing

Locations of possible conflicts at utility crossings can be seen on the Plans. Based on the actual location of utility markings, it may be necessary to uncover existing utilities and determine the exact locations.

After completing field marking of the existing utilities, the Contractor shall determine if an existing utility may be in conflict with the planned improvements. Should a conflict seem likely, the Contractor shall notify the City. If the City concurs that a conflict is likely, the Contractor will be directed to expose the location of the subject utility (pothole). When potholing is required by the City, the Contractor shall expose the location of the existing utility and record the size of pipe and horizontal and vertical location on the Contractor's Record Drawings. Upon receipt of this information, the Engineer will determine if a conflict exists. The City will notify the Contractor within seven full working days as to what design modifications, if any, are required to resolve the conflict.

Payment shall be made for the following Bid item when included in the Proposal:

"Potholing" shall be measured per each.

The unit contract price for "Potholing" shall be full compensation for all labor, tools, equipment, and materials necessary to expose the locations of existing utilities, record vertical and horizontal locations, backfill, and compact excavated areas per City of Stanwood Standard Details. For the purpose of establishing a common basis for evaluating bids, an arbitrary quantity has been shown on the bid form and does not necessarily represent the quantity, if any, of "Potholing" that may be necessary for project work. Therefore, the "significant change" provisions of Section 1-04.6 do not apply. Actual quantities will be determined in the field as work progresses. The Minor Change bid item will be used cover any delays encountered due to the results of potholing.

Provided to Builders Exchange of WA, Inc. For usage Conditions Agreement see www.bxwa.com - Always Verify Scal

1-07.18 Public Liability and Property Damage Insurance

Delete this section in its entirety, and replace it with the following:

1-07.18 Insurance

(February 17, 2026 APWA GSP)

1-07.18(1) General Requirements

A. The Contractor shall procure and maintain the insurance described in all subsections of section 1-07.18 of these Special Provisions, from insurers with a current A. M. Best rating of not less than A-: VII and licensed to do business in the State of Washington. The Contracting Agency reserves the right to approve or reject the insurance provided, based on the insurer's financial condition.

B. The Contractor shall keep this insurance in force without interruption from the commencement of the Contractor's Work through the term of the Contract and for thirty (30) days after the Physical Completion date, unless otherwise indicated below.

C. If any insurance policy is written on a claims-made form, its retroactive date, and that of all subsequent renewals, shall be no later than the effective date of this Contract. The policy shall state that coverage is claims made and state the retroactive date. Claims-made form coverage shall be maintained by the Contractor for a minimum of 36 months following the Completion Date or earlier termination of this Contract, and the Contractor shall annually provide the Contracting Agency with proof of renewal. If renewal of the claims made form of coverage becomes unavailable, or economically prohibitive, the Contractor shall purchase an extended reporting period ("tail") or execute another form of guarantee acceptable to the Contracting Agency to assure financial responsibility for liability for services performed.

D. The Contractor's Automobile Liability, Commercial General Liability and Excess or Umbrella Liability insurance policies shall be primary and non-contributory insurance as respects the Contracting Agency's insurance, self-insurance, or self-insured pool coverage. Any insurance, self-insurance, or self-insured pool coverage maintained by the Contracting Agency shall be excess of the Contractor's insurance and shall not contribute with it.

E. The Contractor shall provide the Contracting Agency and all additional insureds with written notice of any policy cancellation, within two business days of their receipt of such notice.

F. The Contractor shall not begin Work under the Contract until the required insurance has been obtained and approved by the Contracting Agency.

G. Failure on the part of the Contractor to maintain the insurance as required shall constitute a material breach of contract, upon which the Contracting Agency may, after giving five business days' notice to the Contractor to correct the breach, immediately terminate the Contract or, at its discretion, procure or renew such insurance and pay any and all premiums in connection therewith, with any sums so expended to be repaid to the Contracting Agency on demand, or at the sole discretion of the Contracting Agency, offset against funds due the Contractor from the Contracting Agency.

H. All costs for insurance shall be incidental to and included in the unit or lump sum prices of the Contract and no additional payment will be made.

Provided to Builders Exchange of WA, Inc. For usage Conditions Agreement see www.bxwa.com - Always Verify Scal

l. Under no circumstances shall a wrap up policy be obtained, for either initiating or maintaining coverage, to satisfy insurance requirements for any policy required under this Section. A "wrap up policy" is defined as an insurance agreement or arrangement under which all the parties working on a specified or designated project are insured under one policy for liability arising out of that specified or designated project.

1-07.18(2) Additional Insured

All insurance policies, with the exception of Workers Compensation, and of Professional Liability and Builder's Risk (if required by this Contract) shall name the following listed entities as additional insured(s) using the forms or endorsements required herein:

- the Contracting Agency and its officers, elected officials, employees, agents, and volunteers

The above-listed entities shall be additional insured(s) for the full available limits of liability maintained by the Contractor, irrespective of whether such limits maintained by the Contractor are greater than those required by this Contract, and irrespective of whether the Certificate of Insurance provided by the Contractor pursuant to 1-07.18(4) describes limits lower than those maintained by the Contractor.

For Commercial General Liability insurance coverage, the required additional insured endorsements shall be at least as broad as ISO forms CG 20 10 10 01 for ongoing operations and CG 20 37 10 01 for completed operations.

1-07.18(3) Subcontractors

The Contractor shall cause each subcontractor of every tier to provide insurance coverage that complies with all applicable requirements of the Contractor-provided insurance as set forth herein, except the Contractor shall have sole responsibility for determining the limits of coverage required to be obtained by subcontractors.

The Contractor shall ensure that all subcontractors of every tier add all entities listed in 1-07.18(2) as additional insureds, and provide proof of such on the policies as required by that section as detailed in 1-07.18(2) using an endorsement as least as broad as ISO CG 20 10 10 01 for ongoing operations and CG 20 37 10 01 for completed operations.

Upon request by the Contracting Agency, the Contractor shall forward to the Contracting Agency evidence of insurance and copies of the additional insured endorsements of each subcontractor of every tier as required in 1-07.18(4) Verification of Coverage.

1-07.18(4) Verification of Coverage

The Contractor shall deliver to the Contracting Agency a Certificate(s) of Insurance and endorsements for each policy of insurance meeting the requirements set forth herein when the Contractor delivers the signed Contract for the Work. Failure of Contracting Agency to demand such verification of coverage with these insurance requirements or failure of Contracting Agency to identify a deficiency from the insurance documentation provided shall not be construed as a waiver of Contractor's obligation to maintain such insurance.

Verification of coverage shall include:

1. An ACORD certificate or a form determined by the Contracting Agency to be equivalent.

Provided to Builders Exchange of WA, Inc. For usage Conditions Agreement see www.bxwa.com - Always Verify Scal

2. Copies of all endorsements naming Contracting Agency and all other entities listed in 1-07.18(2) as additional insured(s), showing the policy number. The Contractor may submit a copy of any blanket additional insured clause from its policies instead of a separate endorsement.

3. Any other amendatory endorsements to show the coverage required herein.

4. A notation of coverage enhancements on the Certificate of Insurance shall not satisfy these requirements – actual endorsements must be submitted.

5. All insurance coverage maintained or procured pursuant to this agreement shall be endorsed to waive subrogation against the Contracting Agency, its elected or appointed officers, agents, officials, employees, and volunteers or shall specifically allow the Contractor or others providing insurance evidence in compliance with these Specifications to waive their right of subrogation prior to a loss. The Contractor hereby waives its own right of subrogation against the Contracting Agency and shall require similar written express waivers and insurance clauses from each of its subcontractors.

Upon request by the Contracting Agency, the Contractor shall forward to the Contracting Agency a full and certified copy of the insurance policy(s). If Builders Risk insurance is required on this Project, a full and certified copy of that policy is required when the Contractor delivers the signed Contract for the Work.

1-07.18(5) Coverages and Limits

The insurance shall provide the minimum coverages and limits set forth below. Contractor's maintenance of insurance, its scope of coverage, and limits as required herein shall not be construed to limit the liability of the Contractor to the coverage provided by such insurance, or otherwise limit the Contracting Agency's recourse to any remedy available at law or in equity.

All deductibles and self-insured retentions must be disclosed and are subject to approval by the Contracting Agency. The cost of any claim payments falling within the deductible or self-insured retention shall be the responsibility of the Contractor. In the event an additional insured incurs a liability subject to any policy's deductibles or self-insured retention, said deductibles or self-insured retention shall be the responsibility of the Contractor.

1-07.18(5)A Commercial General Liability

Commercial General Liability insurance shall be written on coverage forms at least as broad as ISO occurrence form CG 00 01, including but not limited to liability arising from premises, operations, stop gap liability, independent contractors, products-completed operations, personal and advertising injury, and liability assumed under an insured contract. There shall be no exclusion for liability arising from explosion, collapse or underground property damage.

The Commercial General Liability insurance shall be endorsed to provide a per project general aggregate limit, using ISO form CG 25 03 05 09 or an equivalent endorsement.

Contractor shall maintain Commercial General Liability Insurance arising out of the Contractor's completed operations for at least three years following Substantial Completion of the Work.

Such policy must provide the following minimum limits:

$2,000,000 Each Occurrence

Provided to Builders Exchange of WA, Inc. For usage Conditions Agreement see www.bxwa.com - Always Verify Scal

$3,000,000	General Aggregate
$3,000,000	Products & Completed Operations Aggregate
$2,000,000	Personal & Advertising Injury each offence
$2,000,000	Stop Gap / Employers' Liability each accident

1-07.18(5)B Automobile Liability

Automobile Liability shall cover owned, non-owned, hired, and leased vehicles; and shall be written on a coverage form at least as broad as ISO form CA 00 01. If the Work involves the transport of pollutants, the automobile liability policy shall include MCS 90 and CA 99 48 endorsements.

Such policy must provide the following minimum limit:

$1,000,000	Combined single limit each accident

1-07.18(5)C Workers' Compensation

The Contractor shall comply with Workers' Compensation coverage as required by the Industrial Insurance laws of the State of Washington.

1-07.23 Public Convenience and Safety

(COS GSP)

Section 1-07.23 is supplemented with the following:

No road or street shall be closed to the public except as permitted in these plans and specifications or with the approval of the Engineer and proper governmental authority. Fire hydrants on or adjacent to the work shall be kept accessible to fire-fighting equipment at all times. Provision shall be made by the Contractor to ensure the proper functioning of all gutters, sewer inlets, drainage ditches and culverts, irrigation ditches and natural water courses, and storm sewer facilities throughout the project. Temporary interruption of service will be allowed only with the permission of the Engineer.

The Stanwood Police Department and North County Regional Fire Authority shall be notified at least four (4) hours in advance of any actions by the Contractor that may affect the functions of either the Police Department or Fire Department.

The Contractor shall conduct its work and take preventative measures so that dust or other particulate matter in the project area shall not become objectionable to the adjacent property owners or general public. Should the Owner determine the Contractor is not fulfilling its obligation in this regard; the Owner reserves the right to take such action as may be necessary to remedy the objectionable condition and to charge the Contractor with any cost that may be incurred in such remedial action. All work shall be carried on with due regard for the safety of the public. No driveway, whether public, commercial, or private, may be closed without prior approval of the Owner, project supervisor, or Engineer unless written authority has been given by the affected property owner. The Contractor shall be responsible for notifying the affected property owners 24 hours in advance of scheduled interruptions to access.

Provided to Builders Exchange of WA, Inc. For usage Conditions Agreement see www.bxwa.com - Always Verify Scal

1-07.24 Rights of Way

(April 22, 2025 APWA GSP)

Delete this section and replace it with the following:

Street Right of Way lines, limits of easements, and limits of construction permits are indicated in the Plans. The Contractor's construction activities shall be confined within these limits unless arrangements for use of private property are made as described below.

Generally, the Contracting Agency will have obtained, prior to bid opening, all rights of way and easements, both permanent and temporary, necessary for carrying out the work. Exceptions to this are noted in the Bid Documents or will be brought to the Contractor's attention by a duly issued Addendum.

Whenever any of the work is accomplished on or through property other than public Right of Way, the Contractor shall meet and fulfill all covenants and stipulations of any easement agreement obtained by the Contracting Agency from the owner of the private property. Copies of the easement agreements may be included in the Contract Provisions or made available to the Contractor as soon as practical after they have been obtained by the Engineer.

Whenever easements or rights of entry have not been acquired prior to advertising, these areas are so noted in the Plans. The Contractor shall not proceed with any portion of the work in areas where right of way, easements or rights of entry have not been acquired until the Engineer certifies to the Contractor that the right of way or easement is available or that the right of entry has been received. If the Contractor is delayed due to acts of omission on the part of the Contracting Agency in obtaining easements, rights of entry or right of way, the Contractor will be entitled to an extension of time. The Contractor agrees that such delay shall not be a breach of contract.

Each property owner shall be given 48 hours' notice prior to entry by the Contractor. This includes entry onto easements and private property where private improvements must be adjusted.

The Contractor shall be responsible for providing, without expense or liability to the Contracting Agency, any additional land and access thereto that the Contractor may desire for temporary construction facilities, storage of materials, or other Contractor needs. However, before using any private property, whether adjoining the work or not, the Contractor shall file with the Engineer a written permission of the private property owner, and, upon vacating the premises, a written release from the property owner of each property disturbed or otherwise interfered with by reasons of construction pursued under this contract. The statement shall be signed by the private property owner, or proper authority acting for the owner of the private property affected, stating that permission has been granted to use the property and all necessary permits have been obtained or, in the case of a release, that the restoration of the property has been satisfactorily accomplished. The statement shall include the parcel number, address, and date of signature. Written releases must be filed with the Engineer before the Completion Date will be established.

1-08 Prosecution and Progress

Add the following new section:

Provided to Builders Exchange of WA, Inc. For usage Conditions Agreement see www.bxwa.com - Always Verify Scal

1-08.0 Preliminary Matters

(May 25, 2006 APWA GSP)

Add the following new section:

1-08.0(1) Preconstruction Conference

(October 21, 2025 APWA GSP)

Prior to the Contractor beginning the work, a preconstruction conference will be held between the Contractor, the Engineer and such other interested parties as may be invited. The purpose of the preconstruction conference will be:

1. To review the initial progress schedule;
2. To establish a working understanding among the various parties associated or affected by the work;
3. To establish and review procedures for progress payment, notifications, approvals, submittals, etc.;
4. To review Training or Apprenticeship Plans, when applicable.
5. To discuss FSBE Goals when applicable.
6. To establish normal working hours for the work;
7. To review safety standards and traffic control; and
8. To discuss such other related items as may be pertinent to the work.

The Contractor shall prepare and submit at the preconstruction conference the following:

1. A breakdown of all lump sum items;
2. A preliminary schedule of working drawing submittals; and
3. A list of material sources for approval if applicable.

Add the following new section:

1-08.0(2) Hours of Work

(*****)

Except in the event of an emergency, no work shall be done between the hours of 6:00 p.m. and 7:00 a.m., on Fridays, on weekends, or on holidays observed by the City of Stanwood and identified in Section 1-08.5 of the Standard Specifications. If the proper and efficient prosecution of the work requires operations during the night, hours of operation more than 10 hours per day, or work weeks greater than 40 hours in duration, the written permission of the Owner shall be obtained before starting such items of the work and shall be in full compliance with terms therewith.

The Contractor shall provide a written request to the Owner at least five (5) business days in advance of working non-regular or extended hours. The request shall detail the dates, times, locations of work, and a description of the work to be performed, as well as the personnel and equipment that will be used during these times. No additional payment will be made for overtime costs incurred from working outside the normal working hours. The Contractor shall factor all possible overtime costs into his bid prices for the project. In general, nighttime work shall not be approved for this project; the request to work non-regular hours would involve earlier start times and later finish times and/or weekend work.

Provided to Builders Exchange of WA, Inc. For usage Conditions Agreement see www.bxwa.com - Always Verify Scal

Except in the case of emergency or unless otherwise approved by the Contracting Agency, the normal straight time working hours for the contract shall be any consecutive 10-hour period between 7:00 a.m. and 6:00 p.m. of a working day with a maximum 1-hour lunch break and a 4-day work week of Monday through Thursday. The normal straight time 10-hour working period for the contract shall be established at the preconstruction conference or prior to the Contractor commencing the work.

If a Contractor desires to perform work on holidays, Fridays, Saturdays, Sundays, or before 7:00 a.m. or after 6:00 p.m. on any day, the Contractor shall apply in writing to the Engineer for permission to work such times. Permission to work longer than an 8-hour period between 7:00 a.m. and 6:00 p.m. is not required. Such requests shall be submitted to the Engineer no later than noon on the working day prior to the day for which the Contractor is requesting permission to work.

Permission to work Fridays, Saturdays, Sundays, holidays or other than the agreed upon normal straight time working hours Monday through Thursday may be given subject to certain other conditions set forth by the Contracting Agency or Engineer. These conditions may include but are not limited to: requiring the Engineer or such assistants as the Engineer may deem necessary to be present during the work; requiring the Contractor to reimburse the Contracting Agency for the costs in excess of straight-time costs for Contracting Agency employees who worked during such times, on non-Federal aid projects; considering the work performed on Saturdays and holidays as working days with regards to the contract time; and considering multiple work shifts as multiple working days with respect to contract time even though the multiple shifts occur in a single 24-hour period. Assistants may include, but are not limited to, survey crews; personnel from the Contracting Agency's material testing lab; inspectors; and other Contracting Agency employees when in the opinion of the Engineer, such work necessitates their presence.

1-08.1 Subcontracting
(COS GSP)

Section 1-08.1 is supplemented with the following:

A Subcontractor or an Agent to the Subcontractor will not be permitted to perform any work under the contract until the following documents have been completed and submitted to the Engineer:

1. Request to Sublet Work (form 421-012).
2. Statement of Intent to Pay Prevailing Wages (Form 700-029-000).

The Contractor's records pertaining to the requirements of this Special Provision shall be open to inspection or audit by representatives of the Department during the life of the contract and for a period of not less than three years after the date of acceptance of the contract. The Contractor shall retain these records for that period. The Contractor shall also guarantee that these records of all Subcontractors and Agents shall be open to similar inspection or audit for the same period.

1-08.1(7)A Payment Reporting
(November 25, 2024 APWA GSP
Delete this section and replace it with the following:

Provided to Builders Exchange of WA, Inc. For usage Conditions Agreement see www.bxwa.com - Always Verify Scal

1-08.1(7)A VACANT

1-08.1(8)B Clauses Required in Subcontracts of All Tiers
(November 25, 2024 APWA GSP)

Delete item 8 of the second paragraph of Section 1-08.1(8)B.

1-08.3 Progress Schedule
(COS GSP)

Section 1-08.3 is supplemented with the following:

The order of work will be at the Contractor's option, in keeping with good construction practice and the terms of the contract. All work shall be carried out in accordance with the requirements of the City of Stanwood in compliance with the plans and specifications. However, the Contractor shall so schedule the work within the time constraints noted in the various contract documents, including any permits. The Contractor is cautioned to review said documents and permits and schedule the work appropriately as no additional compensation will be made to the Contractor due to the time constraints imposed by such documents.

1-08.3(2) Progress Schedule Types

1-08.3(2)A Type A Progress Schedule
(February 17, 2026 APWA GSP)

Revise this section to read:

The Contractor shall submit *** 5 *** copies of a Type A Progress Schedule no later than at the preconstruction conference, or some other mutually agreed upon submittal time. The schedule may be a critical path method (CPM) schedule, bar chart, or other standard schedule format. Regardless of which format is used, the schedule shall identify the critical path. The Engineer will evaluate the Type A Progress Schedule and accept or return the schedule for corrections within 15 calendar days of receiving the submittal.

1-08.4 Prosecution of Work

Delete this section and replace it with the following:

1-08.4 Notice to Proceed and Prosecution of Work
(February 17, 2026 APWA GSP)

Notice to Proceed will be given after the Contract has been executed and the contract bond and evidence of insurance have been approved and filed by the Contracting Agency. The Contractor shall not commence with the Work until the Notice to Proceed has been given by the Engineer. The Contractor shall commence construction activities on the project site within

Provided to Builders Exchange of WA, Inc. For usage Conditions Agreement see www.bxwa.com - Always Verify Scal

ten days of the Notice to Proceed Date, unless otherwise approved in writing. The Contractor shall diligently pursue the Work to the Physical Completion Date within the time specified in the Contract. Voluntary shutdown or slowing of operations by the Contractor shall not relieve the Contractor of the responsibility to complete the Work within the time(s) specified in the Contract.

When shown in the Plans, the first order of Work shall be the installation of high visibility fencing to delineate all areas for protection or restoration, as described in the Contract. Installation of high visibility fencing adjacent to the roadway shall occur after the placement of all necessary signs and traffic control devices in accordance with 2-04.3. Upon construction of the fencing, the Contractor shall request the Engineer to inspect the fence. No other Work shall be performed on the site until the Contracting Agency has accepted the installation of high visibility fencing, as described in the Contract.

1-08.5 Time for Completion

(February 17, 2026 APWA GSP, Option A)

Revise the third and fourth paragraphs to read:

Contract time shall begin on the first working day following the Notice to Proceed Date.

Each working day shall be charged to the Contract as it occurs, until the Contract Work is physically complete. If substantial completion has been granted and all the authorized working days have been used, charging of working days will cease. Each week the Engineer will provide the Contractor a statement that shows the number of working days: (1) charged to the Contract the week before; (2) specified for the physical completion of the Contract; and (3) remaining for the physical completion of the Contract. The statement will also show the nonworking days and all partial or whole days the Engineer declares as unworkable. The statement will be identified as a Written Determination by the Engineer. If the Contractor does not agree with the Written Determination of working days, the Contractor shall pursue the protest procedures in accordance with Section 1-04.5. By failing to follow the procedures of Section 1-04.5, the Contractor shall be deemed as having accepted the statement as correct. If the Contractor is approved to work 10 hours a day and 4 days a week (a 4-10 schedule) and the fifth day of the week in which a 4-10 shift is worked would ordinarily be charged as a working day then the fifth day of that week will be charged as a working day whether or not the Contractor works on that day.

Revise the sixth paragraph to read:

The Engineer will give the Contractor written notice of the Completion Date of the Contract after all the Contractor's obligations under the Contract have been performed by the Contractor. The following events must occur before the Completion Date can be established:

1. The physical Work on the project must be complete; and
2. The Contractor must furnish all documentation required by the Contract and required by law, to allow the Contracting Agency to process final acceptance of the Contract. The

Provided to Builders Exchange of WA, Inc. For usage Conditions Agreement see www.bxwa.com - Always Verify Scal

following documents must be received by the Engineer prior to establishing a completion date:

a. Certified Payrolls (per Section 1-07.9(5)).
b. Material Acceptance Certification Documents
c. Monthly Reports in DMCS of the amounts paid including the final payment confirmation to all firms required by Section 1-08.1(7)A if applicable
d. Final Contract Voucher Certification
e. Copies of the approved "Affidavit of Prevailing Wages Paid" for the Contractor and all subcontractors
f. A copy of the Notice of Termination sent to the Washington State Department of Ecology (Ecology); the elapse of 30 calendar days from the date of receipt of the Notice of Termination by Ecology; and no rejection of the Notice of Termination by Ecology. This requirement will not apply if the Construction Stormwater General Permit is transferred back to the Contracting Agency in accordance with Section 8-01.3(16).
g. Property owner releases per Section 1-07.24

Section 1-08.5 is supplemented with the following:

(COS GSP)
This project shall be physically completed in its entirety within *** 60 *** working days.

1-08.9 Liquidated Damages
(February 17, 2026 APWA GSP, Option B)

Revise the second and third paragraphs to read:

Accordingly, the Contractor agrees:

1. To pay (according to the following formula) liquidated damages for each working day beyond the number of working days established for Physical Completion, and

2. To authorize the Engineer to deduct these liquidated damages from any money due or coming due to the Contractor.

Liquidated Damages Formula

LD=0.15C/T

Where:

LD = liquidated damages per working day (rounded to the nearest dollar)
C = original Contract amount
T = original time for Physical Completion

When the Contract Work has progressed to Substantial Completion as defined in the Contract, the Engineer may determine the Contract Work is Substantially Complete. The Engineer will notify the Contractor in writing of the Substantial Completion Date. For

Provided to Builders Exchange of WA, Inc. For usage Conditions Agreement see www.bxwa.com - Always Verify Scal

overruns in Contract time occurring after the date so established, the formula for liquidated damages shown above will not apply. For overruns in Contract time occurring after the Substantial Completion Date, liquidated damages shall be assessed on the basis of direct engineering and related costs assignable to the project until the actual Physical Completion Date of all the Contract Work. The Contractor shall complete the remaining Work as promptly as possible. Upon request by the Engineer, the Contractor shall furnish a written schedule for completing the physical Work on the Contract.

1-09 Measurement and Payment

1-09.2(1) General Requirements for Weighing Equipment

(COS GSP)

The last paragraph of Section 1-09.2 is supplemented with the following:

Trucks and Tickets

All tickets shall, at a minimum, contain the following information:

1. Ticket serial number
2. Date and hour of weighing
3. Weigher's identification

Duplicate tally tickets shall be prepared to accompany each truckload of materials delivered to the project.

It is the responsibility of the Contractor to see that tickets are given to the Inspector on the project for each truckload of material delivered. Pay quantities will be prepared on the basis of said tally tickets, delivered to the Inspector at time of delivery of materials. Tickets not collected at the time of delivery will not be honored for payment.

1-09.2(5) Measurement

(December 30, 2022 APWA GSP)

Revise the first paragraph to read:

Scale Verification Checks – At the Engineer's discretion, the Engineer may perform verification checks on the accuracy of each batch, hopper, or platform scale used in weighing contract items of Work.

1-09.6 Force Account

(December 30, 2022 APWA GSP)

Supplement this section with the following:

The Contracting Agency has estimated and included in the Proposal, dollar amounts for all items to be paid per force account, only to provide a common proposal for Bidders. All such dollar amounts are to become a part of Contractor's total bid. However, the Contracting

Provided to Builders Exchange of WA, Inc. For usage Conditions Agreement see www.bxwa.com - Always Verify Scal

Agency does not warrant expressly or by implication, that the actual amount of work will correspond with those estimates. Payment will be made on the basis of the amount of work actually authorized by the Engineer.

1-09.9 Payments

(February 17, 2026 APWA GSP, Option B)

Delete the fourth paragraph and replace it with the following:

Progress payments for completed Work and material on hand will be based upon progress estimates prepared by the Engineer. A progress estimate cutoff date will be established at the preconstruction conference.

The initial progress estimate will be made not later than 30 days after the Contractor commences the Work, and successive progress estimates will be made every month thereafter until the Completion Date. Progress estimates made during progress of the Work are tentative, and made only for the purpose of determining progress payment. The progress estimates are subject to change at any time prior to the calculation of the Final Payment.

The value of the progress estimate will be the sum of the following:

1. Unit Price Items in the Bid Form — the approximate quantity of acceptable units of Work completed multiplied by the unit price.
2. Lump Sum Items in the Bid Form — based on the approved Contractor's lump sum breakdown for that item, or absent such a breakdown, based on the Engineer's determination.
3. Materials on Hand — 100 percent of invoiced cost of material delivered to Job site or other storage area approved by the Engineer.
4. Change Orders — entitlement for approved extra cost or completed extra Work as determined by the Engineer.

Progress payments will be made in accordance with the progress estimate less:

1. Retainage per Section 1-09.9(1), on non FHWA-funded projects;
2. The amount of Progress Payments previously made; and
3. Funds withheld by the Contracting Agency for disbursement in accordance with the Contract Documents.

Progress payments for Work performed shall not be evidence of acceptable performance or an admission by the Contracting Agency that any Work has been satisfactorily completed. The determination of payments under the Contract will be final in accordance with Section 1-05.1.

The sixth paragraph of Section 1-09.9 is deleted.

1-09.11 Disputes and Claims

1-09.11(3) Time Limitation and Jurisdiction

(December 30, 2022 APWA GSP)

Revise this section to read:

Provided to Builders Exchange of WA, Inc. For usage Conditions Agreement see www.bxwa.com - Always Verify Scal

For the convenience of the parties to the Contract it is mutually agreed by the parties that all claims or causes of action which the Contractor has against the Contracting Agency arising from the Contract shall be brought within 180 calendar days from the date of final acceptance (Section 1-05.12) of the Contract by the Contracting Agency; and it is further agreed that all such claims or causes of action shall be brought only in the Superior Court of the county where the Contracting Agency headquarters is located, provided that where an action is asserted against a county, RCW 36.01.050 shall control venue and jurisdiction. The parties understand and agree that the Contractor's failure to bring suit within the time period provided, shall be a complete bar to all such claims or causes of action. It is further mutually agreed by the parties that when claims or causes of action which the Contractor asserts against the Contracting Agency arising from the Contract are filed with the Contracting Agency or initiated in court, the Contractor shall permit the Contracting Agency to have timely access to all records deemed necessary by the Contracting Agency to assist in evaluating the claims or action.

1-09.13 Claims Resolution

1-09.13(3) Arbitration

1-09.13(3)A Arbitration General

(January 19, 2022 APWA GSP)

Revise the third paragraph to read:

The Contracting Agency and the Contractor mutually agree to be bound by the decision of the arbitrator, and judgment upon the award rendered by the arbitrator may be entered in the Superior Court of the county in which the Contracting Agency's headquarters is located, provided that where claims subject to arbitration are asserted against a county, RCW 36.01.050 shall control venue and jurisdiction of the Superior Court. The decision of the arbitrator and the specific basis for the decision shall be in writing. The arbitrator shall use the Contract as a basis for decisions.

1-09.13(4) Venue for Litigation

(December 30, 2022 APWA GSP)

Revise this section to read:

Litigation shall be brought in the Superior Court of the county in which the Contracting Agency's headquarters is located, provided that where claims are asserted against a county, RCW 36.01.050 shall control venue and jurisdiction of the Superior Court. It is mutually agreed by the parties that when litigation occurs, the Contractor shall permit the Contracting Agency to have timely access to all records deemed necessary by the Contracting Agency to assist in evaluating the claims or action.

END OF DIVISION 1

Provided to Builders Exchange of WA, Inc. For usage Conditions Agreement see www.bxwa.com - Always Verify Scal

Division 2
Temporary Features

2-01 Mobilization
(*COS GSP*)

Section 2-01 is supplemented with the following:

Payment will be made for the following bid item:

Mobilization	**Per Lump Sum**

Mobilization shall include, but not be limited to, the following items: the movement of the Contractor's personnel, equipment, supplies, and incidentals to the project site; the establishment of his office, buildings, and other facilities necessary for work on the project; providing sanitary facilities for the Contractor's personnel; obtaining permits or licenses required to complete the project not furnished by the City; and other work and operations which must be performed or costs that must be incurred.

2-03 Public Convenience and Safety

2-03.3 Construction Requirements

(November 4, 2024 WSDOT)
Lane, ramp, shoulder, and roadway closures are only permitted as follows:

Traffic control on 271st Street SW and 84th Avenue W must allow for one lane of traffic in each direction, unless otherwise approved by the Engineer.

If the Engineer determines the permitted closure hours adversely affect traffic, the Engineer may adjust the hours accordingly. The Engineer will notify the Contractor in writing of any change in the closure hours. Exceptions to these restrictions are listed below and when applicable take precedence over closures listed above. The Engineer may also consider on a case-by-case basis additional exceptions following a written request by the Contractor.

Lane, ramp, shoulder, and roadway closures are not allowed on any of the following:

1. A holiday,

2. A holiday weekend; holidays that occur on Friday, Saturday, Sunday or Monday are considered a holiday weekend. A holiday weekend includes Saturday, Sunday, and the holiday.

3. After *** 3:00 P.M. *** on the day prior to a holiday or holiday weekend, and

4. Before *** 8:00 A.M. *** on the day after the holiday or holiday weekend.

Provided to Builders Exchange of WA, Inc. For usage Conditions Agreement see www.bxwa.com - Always Verify Scal

Traffic Delays

When Automated Flagger Assistance Devices (AFADs) or flaggers are used to control traffic, traffic shall not be stopped for more than *** 5 *** minutes at any time. All traffic congestion shall be allowed to clear before traffic is delayed again.

If the delay becomes greater than *** 5 *** minutes, the Contractor shall immediately begin to take action to cease the operations that are causing the delays. If the *** 5 *** minute delay limit has been exceeded, as determined by the Engineer, the Contractor shall provide to the Engineer, a written proposal to revise their work operations to meet the *** 5 *** minute limit. This proposal shall be accepted by the Engineer prior to resuming any work requiring traffic control.

There shall be no delay to medical, fire, or other emergency vehicles. The Contractor shall alert all flaggers and personnel of this requirement.

General Restrictions

Construction vehicles using a closed traffic lane shall travel only in the normal direction of traffic flow unless expressly allowed in an accepted traffic control plan. Construction vehicles shall be equipped with flashing or rotating amber lights.

No two consecutive on-ramps, off-ramps, or intersections shall be closed at the same time and only one ramp at an interchange shall be closed, unless specifically shown in the Plans.

Roads or ramps that are designated as part of a detour shall not be closed or restricted during the implementation of that detour, unless specifically shown in the Plans.

Controlled Access

No special access or egress shall be allowed by the Contractor other than normal legal movements or as shown in the Plans.

Contractor's vehicles of 10,000 GVW or greater shall not exit or enter a lane open to public traffic except as follows:

Egress and ingress shall only occur during the hours of allowable lane closures, and:

1. For exiting an open lane of traffic, by decelerating in a lane that is closed during the allowable hours for lane closures.

2. For entering an open lane of traffic, by accelerating in a closed lane during the allowable hours for lane closures.

Traffic control vehicles are excluded from the gross vehicle weight requirement. If placing construction signs will restrict traveled lanes, then the work will be permitted during the hours of allowable lane closures.

Advance Notification

The Contractor shall notify the Engineer in writing of any traffic impacts related to lane closure, shoulder closure, sidewalk closure, or any combination for the week by 12:00 p.m. (noon) Wednesday the week prior to the stated impacts.

Provided to Builders Exchange of WA, Inc. For usage Conditions Agreement see www.bxwa.com - Always Verify Scal

The Contractor shall notify the Engineer in writing ten working days in advance of any traffic impacts related to full roadway closure, ramp closure, or both.

The Contractor shall notify the Engineer in writing of any changes to the stated traffic impacts a minimum of 48 hours prior to the traffic impacts.

Provided to Builders Exchange of WA, Inc. For usage Conditions Agreement see www.bxwa.com - Always Verify Scal

Division 3
Earthwork

3-01 Clearing, Grubbing, and Roadside Cleanup

3-01.1 Description

Section 3-01.1 is supplemented with the following:

"Tree removal" means removing and disposing of trees, including the roots and debris.

3-01.3 Construction Requirements

Section 3-01.3 is supplemented with the following:

Tree Removal

Trees identified for removal shall be completely removed, including the roots, unless the Engineer determines that complete removal is not necessary. In such cases, the trunk shall be cut at ground level and treated with an approved herbicide.

3-01.4 Measurement

Section 3-01.4 is supplemented with the following:

The removal of trees will be measured per each for each tree removed.

3-01.5 Payment

Section 3-01.5 is supplemented with the following:

"Tree Removal", per each.

The unit Contract price for each for "Tree Removal" shall be full compensation for performing the Work as specified, including property owner notifications and filling root/stump holes with topsoil, herbicide treatment, as well as all Work to process, mulch, prepare, and stockpile, as required.

3-02 Removal of Structures and Obstructions

3-02.1 Description

Section 3-02.1 is supplemented with the following:

The Work includes removal of curb, curb and gutter, and cement concrete sidewalk.

3-02.3 Construction Requirements

Section 3-02.3 is supplemented with the following:

3-02.3(3) Removal of Pavement, Sidewalks, Curbs, and Gutters

Section 3-02.3(3) is supplemented with the following:

All full-depth sawcuts shall be continuous, and shall be made with saws specifically equipped for the purpose. No skip cutting or jack hammering will be allowed unless specifically approved otherwise in writing by the Engineer. The location of all pavement cuts shall be where shown in the Plans or as approved by the Engineer in the field before cutting commences.

Provided to Builders Exchange of WA, Inc. For usage Conditions Agreement see www.bxwa.com - Always Verify Scal

The approximate thickness of the asphalt concrete pavement is

***
271st St NW – 6" to 10"
***

All sawcutting performed in the Contract shall provide for and include removal and disposal of slurry created from water cooling/lubrication, in accordance with the Washington State Department of Ecology regulations. Waste material (slurry) shall not be allowed to enter drainage systems, ditches, or streams.

Removal of Cement Concrete Curbs, Curbs and Gutters and Sidewalk
The Contractor shall use a sawcut to delineate concrete curbing, gutters, and sidewalk to be removed from curbs, gutters, and sidewalk to remain. The Contractor shall take care to avoid damaging adjacent curbs, gutters, and sidewalk to remain. Any damage caused to the curbs, gutters, and sidewalk to remain, as a result of the Contractor's operations, shall be repaired to the satisfaction of the Engineer at no additional cost to the Contracting Agency.

Removal of Drainage Structures and Pipes
Where shown in the Plans, or at other locations as determined by the Engineer, the Contractor shall remove catch basins, regardless of the size or type, and storm drain pipe. Each catch basin or storm drain pipe shall be removed in its entirety. Where pipe removal is not required for the construction of the new drainage system, the existing pipe may be abandoned in place. Locations of abandonment shall be confirmed by the Engineer.

Pipe removal shall include removal of caps, flanges, fittings, and associated components.

Voids left by catch basin or storm drain pipe removal shall be backfilled and compacted in accordance with Section 2-03.3(14)C.

All materials removed shall become the property of the Contractor and shall be disposed of outside the project limits.

Add the following new section:

3-02.3(4) Removal of Obstructions
The following miscellaneous Obstructions shall be removed and salvaged.

Item (Approx. Location)	*Quantity*
Stanwood Hospitality Sign (East side of site)	1 EA

During removal, care will be taken to salve sign for City storage and future use.

3-02.4 Measurement
Section 3-02.4 is supplemented with the following:

Removing cement concrete curb and gutter will be measured by the linear foot along the line and slope of the existing curb and gutter, if present, prior to removal.

Provided to Builders Exchange of WA, Inc. For usage Conditions Agreement see www.bxwa.com - Always Verify Scal

Removing cement concrete sidewalk will be measured by the square yard, exclusive of adjacent curbs and gutters and/or asphalt.

Removal of drainage Structures will be measured per each for each drainage Structure removed.

Sawcutting existing pavement will be measured by the linear foot. Measurement will occur once, regardless of the number of passes required to sawcut to the depth required to accomplish the removal.

3-02.5 Payment

Section 3-02.5 is supplemented with the following:

"Removing Cement Conc. Curb and Gutter", per linear foot.
The unit Contract price per linear foot for "Removing Cement Conc. Curb and Gutter" shall be full compensation for performing the Work as specified, including disposal.

"Removing Cement Conc. Sidewalk", per square yard.
The unit Contract price per linear foot for "Removing Cement Conc. Sidewalk" shall be full compensation for performing the Work as specified, including disposal.

"Removing Existing Drainage Structure", per each.
The unit Contract price per each for "Removing Drainage Structure" shall be full pay to perform the Work as specified, including completely removing items, furnishing and placing backfill material, compacting the voids, plugging and abandoning pipes, saw cutting, and disposing of the items.

"Sawcutting Existing Pavement", per linear foot.
The unit Contract price per linear foot for "Sawcutting Existing Pavement" shall be full pay for all labor, material, tools, and equipment necessary to satisfactorily complete the Work as defined in the Contract Plans and these Special Provisions. No measurement will be made for sawcutting when sawcutting is paid for as part of the unit price of other pay items or for additional cuts within the removal limits not shown in the Site Preparation and TESC Plans.

3-10 Protection/Adjustment of Existing Monitoring Wells

3-10.1 Description

This Section addresses protection of monitoring wells and adjusting wells for final grade.

Approximately 25 existing ground water monitoring wells are present throughout the project site, as shown in the Plans. All but one are completed with flush mount well monuments.

3-10.2 Vacant

3-10.3 Construction Requirements

3-10.3(1) General

The Contractor shall protect and preserve all existing ground water monitoring wells as shown in the Plans, from damage or covering during construction. Monitoring wells shall be

Provided to Builders Exchange of WA, Inc. For usage Conditions Agreement see www.bxwa.com - Always Verify Scal

made accessible for sampling by the Engineer during all project Work. The Contractor shall stake or otherwise mark well locations so they are locatable by visual means, and provide access to the Engineer to monitor or sample wells during construction.

3-10.3(2) Adjusting Monitoring Wells

For wells in embankment, fill, or cut, areas (i.e., grade changes) or areas to be paved (e.g., sidewalk) as shown in the Plans, the Contractor shall shorten or extend the well as needed, and install new flush mount completions (monuments) level with final grades or paved surfaces. No PVC solvent may be used to repair or extend monitoring wells; all connections must be made using box threaded joints or couplings with stainless steel rivets. The Contractor shall extend wells by adding box-threaded 2-inch schedule 40 PVC monitoring well riser pipe to the well riser pipe, surrounded by a 6 or 8-inch PVC or steel casing. New monuments must be flush mount, road-rated, rain-tight, bolt-secured, minimum 8-inch diameter monitoring well monuments set in concrete. All modifications to existing wells must be made by the Contractor in the presence of the Engineer. The Contractor shall not access or open any monitoring wells without authorization and monitoring by the Engineer.

The Contractor shall replace in-kind, at its own cost, all wells damaged or otherwise rendered unusable by the Contractor's activities or failure to protect. Replacement shall include drilling, installation, and development of a new monitoring well in accordance with Chapter 173-160 WAC Minimum Standards for Construction and Maintenance of Wells, by a drilling Contractor licensed under Chapter 173-162 WAC, Regulation and Licensing of Well Contractors and Operators at the same or nearby location, depth, and construction, under the full time observation of the Engineer. The Contractor shall bear the cost of well replacement, including the Engineer's time to monitor, log, develop, and prepare borehole logs for the new well(s).

3-10.4 Measurement

Adjust monitoring well to finished grade shall be per each monitoring well which is lengthened or shortened to match adjacent finished grade.

3-10.5 Payment

Payment will be made in accordance with Section 1-04.1, for the following Bid item when it is included in the Proposal:

"Adjust Monitoring Well to Finished Grade", per each.

The unit Contract price per each "Adjust Monitoring Well to Finished Grade" shall be full compensation for Work to adjust grade of monitoring wells to match adjacent finished grade as specified in the Plans and in these Provisions.

END OF DIVISION 3

Provided to Builders Exchange of WA, Inc. For usage Conditions Agreement see www.bxwa.com - Always Verify Scal

Division 5
Surface Treatments and Pavements

5-04 Hot Mix Asphalt

(December 12, 2025 APWA GSP)

Delete Section 5-04 and replace it with the following:

5-04.1 Description

This Work shall consist of providing and placing one or more layers of plant-mixed hot mix asphalt (HMA) on a prepared foundation or base in accordance with these Specifications and the lines, grades, thicknesses, and typical cross-sections shown in the Plans. The manufacture of HMA may include warm mix asphalt (WMA) processes in accordance with these Specifications. WMA processes include organic additives, chemical additives, and foaming.

HMA shall be composed of asphalt binder and mineral materials as may be required, mixed in the proportions specified to provide a homogeneous, stable, and workable mixture.

5-04.2 Materials

Materials shall meet the requirements of the following sections:

Asphalt Binder	9-02.1(4)
Cationic Emulsified Asphalt	9-02.1(6)
Anti-Stripping Additive	9-02.4
HMA Additive	9-02.5
Aggregates	9-03.8
Recycled Asphalt Pavement (RAP)	9-03.8(3)B, 9-03.21
Reclaimed Asphalt Shingles (RAS)	9-03.8(3)B, 9-03.21
Mineral Filler	9-03.8(5)
Recycled Material	9-03.21

The Contract documents may establish that the various mineral materials required for the manufacture of HMA will be furnished in whole or in part by the Contracting Agency. If the documents do not establish the furnishing of any of these mineral materials by the Contracting Agency, the Contractor shall be required to furnish such materials in the amounts required for the designated mix. Mineral materials include coarse and fine aggregates, and mineral filler.

The Contractor may choose to utilize recycled asphalt pavement (RAP) in the production of HMA. The RAP may be from pavements removed under the Contract, if any, or pavement material from an existing stockpile.

The Contractor may use up to 20 percent RAP by total weight of HMA with no additional sampling or testing of the RAP.

Provided to Builders Exchange of WA, Inc. For usage Conditions Agreement see www.bxwa.com - Always Verify Scal

If the Contractor wishes to utilize High RAP/Any RAS, the design must be listed on the WSDOT Qualified Products List (QPL).

The grade of asphalt binder shall be as required by the Contract. Blending of asphalt binder from different sources is not permitted.

The Contractor may only use warm mix asphalt (WMA) processes in the production of HMA with 20 percent or less RAP by total weight of HMA. The Contractor shall submit to the Engineer for approval the process that is proposed and how it will be used in the manufacture of HMA.

Production of aggregates shall comply with the requirements of Section 3-01. Preparation of stockpile site, the stockpiling of aggregates, and the removal of aggregates from stockpiles shall comply with the requirements of Section 3-02.

5-04.2(1) How to Get an HMA Mix Design on the QPL

If the Contractor wishes to submit a mix design for inclusion in the Qualified Products List (QPL), please follow the WSDOT process outlined in Standard Specification 5-04.2(1).

5-04.2(1)A Vacant

5-04.2(2) Mix Design - Obtaining Project Approval

No paving shall begin prior to the approval of the mix design by the Engineer.

Nonstatistical evaluation will be used for all HMA not designated as Commercial HMA in the Contract documents.

Commercial evaluation will be used for Commercial HMA and for other classes of HMA in the following applications: sidewalks, road approaches, ditches, slopes, paths, trails, gores, prelevel, temporary pavement, and pavement repair. Other nonstructural applications of HMA accepted by commercial evaluation shall be as approved by the Project Engineer. Sampling and testing of HMA accepted by commercial evaluation will be at the option of the Project Engineer. The Proposal quantity of HMA that is accepted by commercial evaluation will be excluded from the quantities used in the determination of nonstatistical evaluation.

Nonstatistical Mix Design. Fifteen days prior to the first day of paving the Contractor shall provide one of the following mix design verification certifications for Contracting Agency review;

- The WSDOT Mix Design Evaluation Report from the current WSDOT QPL, or one of the mix design verification certifications listed below.
- The proposed HMA mix design on WSDOT Form 350-042 with the seal and certification (stamp & signature) of a valid licensed Washington State Professional Engineer. * (see below)
- The Mix Design Report for the proposed HMA mix design developed by a qualified City or County laboratory that is within one year of the approval date. * (see below)

Provided to Builders Exchange of WA, Inc. For usage Conditions Agreement see www.bxwa.com - Always Verify Scal

The mix design shall be performed by a lab accredited by a national authority such as Laboratory Accreditation Bureau, L-A-B for Construction Materials Testing, The Construction Materials Engineering Council (CMEC's) ISO 17025 or AASHTO Accreditation Program (AAP) and shall supply evidence of participation in the AASHTO: resource proficiency sample program.

Mix designs for HMA accepted by Nonstatistical evaluation shall:

- Be designed for ***$$1$$*** million equivalent single axle loads (ESALs).
- Have the aggregate structure and asphalt binder content determined in accordance with WSDOT Standard Operating Procedure 732 and meet the requirements of Sections 9-03.8(2), except that Hamburg testing for ruts and stripping are at the discretion of the Engineer, and 9-03.8(6).
- Have anti-strip requirements, if required, for the proposed mix design determined in accordance with AASHTO T 283 or T 324 or based on historic anti-strip and aggregate source compatibility from previous WSDOT lab testing.

* At the discretion of the Engineer, agencies may accept verified mix designs older than 12 months from the original verification date with a certification from the Contractor that the materials and sources are the same as those shown on the original mix design.

Commercial Evaluation Mix Design. Approval of a mix design for "Commercial Evaluation" will be based on a review of the Contractor's submittal of WSDOT Form 350-042 (for commercial mixes, AASHTO T 324 evaluation is not required) or a Mix Design from the current WSDOT QPL or from one of the processes allowed by this section. Testing of the HMA by the Contracting Agency for mix design approval is not required.

For the Bid Item Commercial HMA, the Contractor shall select a class of HMA and design level of ESALs appropriate for the required use.

5-04.2(2)B Using Warm Mix Asphalt Processes

The Contractor may elect to use additives that reduce the optimum mixing temperature or serve as a compaction aid for producing HMA. Additives include organic additives, chemical additives and foaming processes. The use of Additives is subject to the following:

- Do not use additives that reduce the mixing temperature more than allowed in Section 5-04.3(6) in the production of mixtures.
- Before using additives, obtain the Engineer's approval using WSDOT Form 350-076 to describe the proposed additive and process.

5-04.3 Construction Requirements

5-04.3(1) Weather Limitations

Do not place HMA for wearing course on any Traveled Way beginning October 1st through March 31st of the following year without written concurrence from the Engineer.

Provided to Builders Exchange of WA, Inc. For usage Conditions Agreement see www.bxwa.com - Always Verify Scal

Do not place HMA on any wet surface, or when the average surface temperatures are less than those specified below, or when weather conditions otherwise prevent the proper handling or finishing of the HMA.

Minimum Surface Temperature for Paving

Compacted Thickness (Feet)	Wearing Course	Other Courses
Less than 0.10	55°F	45°F
0.10 to .20	45°F	35°F
More than 0.20	35°F	35°F

5-04.3(2) Paving Under Traffic

When the Roadway being paved is open to traffic, the requirements of this Section shall apply.

The Contractor shall keep intersections open to traffic at all times except when paving the intersection or paving across the intersection. During such time, and provided that there has been an advance warning to the public, the intersection may be closed for the minimum time required to place and compact the mixture. In hot weather, the Engineer may require the application of water to the pavement to accelerate the finish rolling of the pavement and to shorten the time required before reopening to traffic.

Before closing an intersection, advance warning signs shall be placed, and signs shall also be placed marking the detour or alternate route.

During paving operations, temporary pavement markings shall be maintained throughout the project. Temporary pavement markings shall be installed on the Roadway prior to opening to traffic. Temporary pavement markings shall be in accordance with Section 8-23.

All costs in connection with performing the Work in accordance with these requirements, except the cost of temporary pavement markings, shall be included in the unit Contract prices for the various Bid items involved in the Contract.

5-04.3(3) Equipment

5-04.3(3)A Mixing Plant

Plants used for the preparation of HMA shall conform to the following requirements:

1. **Equipment for Preparation of Asphalt Binder** – Tanks for the storage of asphalt binder shall be equipped to heat and hold the material at the required temperatures. The heating shall be accomplished by steam coils, electricity, or other approved means so that no flame shall be in contact with the storage tank. The circulating system for the

Provided to Builders Exchange of WA, Inc. For usage Conditions Agreement see www.bxwa.com - Always Verify Scal

asphalt binder shall be designed to ensure proper and continuous circulation during the operating period. A valve for the purpose of sampling the asphalt binder shall be placed in either the storage tank or in the supply line to the mixer.

2. **Thermometric Equipment** – An armored thermometer, capable of detecting temperature ranges expected in the HMA mix, shall be fixed in the asphalt binder feed line at a location near the charging valve at the mixer unit. The thermometer location shall be convenient and safe for access by Inspectors. The plant shall also be equipped with an approved dial-scale thermometer, a mercury actuated thermometer, an electric pyrometer, or another approved thermometric instrument placed at the discharge chute of the drier to automatically register or indicate the temperature of the heated aggregates. This device shall be in full view of the plant operator.

3. **Heating of Asphalt Binder** – The temperature of the asphalt binder shall not exceed the maximum recommended by the asphalt binder manufacturer nor shall it be below the minimum temperature required to maintain the asphalt binder in a homogeneous state. The asphalt binder shall be heated in a manner that will avoid local variations in heating. The heating method shall provide a continuous supply of asphalt binder to the mixer at a uniform average temperature with no individual variations exceeding 25°F. Also, when a WMA additive is included in the asphalt binder, the temperature of the asphalt binder shall not exceed the maximum recommended by the manufacturer of the WMA additive.

4. **Sampling and Testing of Mineral Materials** – The HMA plant shall be equipped with a mechanical sampler for the sampling of the mineral materials. The mechanical sampler shall meet the requirements of Section 1-05.6 for the crushing and screening operation. The Contractor shall provide for the setup and operation of the field-testing facilities of the Contracting Agency as provided for in Section 3-01.2(2).

5. **Sampling HMA** – The HMA plant shall provide for sampling HMA by one of the following methods:

    a. A mechanical sampling device attached to the HMA plant.

    b. Platforms or devices to enable sampling from the hauling vehicle without entering the hauling vehicle.

5-04.3(3)B Hauling Equipment

Trucks used for hauling HMA shall have tight, clean, smooth metal beds and shall have a cover of canvas or other suitable material of sufficient size to protect the mixture from adverse weather. Whenever the weather conditions during the work shift include, or are forecast to include precipitation or an air temperature less than 45°F or when time from loading to unloading exceeds 30 minutes, the cover shall be securely attached to protect the HMA.

The Contractor shall provide an environmentally benign means to prevent the HMA mixture from adhering to the hauling equipment. Excess release agent shall be drained prior to filling hauling equipment with HMA. Petroleum derivatives or other coating material that

Provided to Builders Exchange of WA, Inc. For usage Conditions Agreement see www.bxwa.com - Always Verify Scal

contaminate or alter the characteristics of the HMA shall not be used. For live bed trucks, the conveyer shall be in operation during the process of applying the release agent.

5-04.3(3)C Pavers

HMA pavers shall be self-contained, power-propelled units, provided with an internally heated vibratory screed and shall be capable of spreading and finishing courses of HMA plant mix material in lane widths required by the paving section shown in the Plans.

The HMA paver shall be in good condition and shall have the most current equipment available from the manufacturer for the prevention of segregation of the HMA mixture installed, in good condition, and in working order. The equipment certification shall list the make, model, and year of the paver and any equipment that has been retrofitted.

The screed shall be operated in accordance with the manufacturer's recommendations and shall effectively produce a finished surface of the required evenness and texture without tearing, shoving, segregating, or gouging the mixture. A copy of the manufacturer's recommendations shall be provided upon request by the Contracting Agency. Extensions will be allowed provided they produce the same results, including ride, density, and surface texture as obtained by the primary screed. Extensions without augers and an internally heated vibratory screed shall not be used in the Traveled Way.

When specified in the Contract, reference lines for vertical control will be required. Lines shall be placed on both outer edges of the Traveled Way of each Roadway. Horizontal control utilizing the reference line will be permitted. The grade and slope for intermediate lanes shall be controlled automatically from reference lines or by means of a mat referencing device and a slope control device. When the finish of the grade prepared for paving is superior to the established tolerances and when, in the opinion of the Engineer, further improvement to the line, grade, cross-section, and smoothness can best be achieved without the use of the reference line, a mat referencing device may be substituted for the reference line. Substitution of the device will be subject to the continued approval of the Engineer. A joint matcher may be used subject to the approval of the Engineer. The reference line may be removed after the completion of the first course of HMA when approved by the Engineer. Whenever the Engineer determines that any of these methods are failing to provide the necessary vertical control, the reference lines will be reinstalled by the Contractor.

The Contractor shall furnish and install all pins, brackets, tensioning devices, wire, and accessories necessary for satisfactory operation of the automatic control equipment.

If the paving machine in use is not providing the required finish, the Engineer may suspend Work as allowed by Section 1-08.6. Any cleaning or solvent type liquids spilled on the pavement shall be thoroughly removed before paving proceeds.

5-04.3(3)D Material Transfer Device or Material Transfer Vehicle

A Material Transfer Device/Vehicle (MTD/V) shall only be used with the Engineer's approval, unless otherwise required by the Contract.

Provided to Builders Exchange of WA, Inc. For usage Conditions Agreement see www.bxwa.com - Always Verify Scal

Where an MTD/V is required by the Contract, the Engineer may approve paving without an MTD/V, at the request of the Contractor. The Engineer will determine if an equitable adjustment in cost or time is due.

When used, the MTD/V shall mix the HMA after delivery by the hauling equipment and prior to placement by the paving machine. Mixing of the HMA shall be sufficient to obtain a uniform temperature throughout the mixture. If a windrow elevator is used, the length of the windrow may be limited in urban areas or through intersections, at the discretion of the Engineer.

To be approved for use, an MTV:

1. Shall be self-propelled vehicle, separate from the hauling vehicle or paver.

2. Shall not be connected to the hauling vehicle or paver.

3. May accept HMA directly from the haul vehicle or pick up HMA from a windrow.

4. Shall mix the HMA after delivery by the hauling equipment and prior to placement into the paving machine.

5. Shall mix the HMA sufficiently to obtain a uniform temperature throughout the mixture.

To be approved for use, an MTD:

1. Shall be positively connected to the paver.

2. May accept HMA directly from the haul vehicle or pick up HMA from a windrow.

3. Shall mix the HMA after delivery by the hauling equipment and prior to placement into the paving machine.

4. Shall mix the HMA sufficiently to obtain a uniform temperature throughout the mixture.

5-04.3(3)E Rollers

Rollers shall be of the steel wheel, vibratory, oscillatory, or pneumatic tire type, in good condition and capable of reversing without backlash. Operation of the roller shall be in accordance with the manufacturer's recommendations. When ordered by the Engineer for any roller planned for use on the project, the Contractor shall provide a copy of the manufacturer's recommendation for the use of that roller for compaction of HMA. The number and weight of rollers shall be sufficient to compact the mixture in compliance with the requirements of Section 5-04.3(10). The use of equipment that results in crushing of the

Provided to Builders Exchange of WA, Inc. For usage Conditions Agreement see www.bxwa.com - Always Verify Scal

aggregate will not be permitted. Rollers producing pickup, washboard, uneven compaction of the surface, displacement of the mixture or other undesirable results shall not be used.

5-04.3(4) Preparation of Existing Paved Surfaces

When the surface of the existing pavement or old base is irregular, the Contractor shall bring it to a uniform grade and cross-section as shown on the Plans or approved by the Engineer.

Preleveling of uneven or broken surfaces over which HMA is to be placed may be accomplished by using an asphalt paver, a motor patrol grader, or by hand raking, as approved by the Engineer.

Compaction of preleveling HMA shall be to the satisfaction of the Engineer and may require the use of small steel wheel rollers, plate compactors, or pneumatic rollers to avoid bridging across preleveled areas by the compaction equipment. Equipment used for the compaction of preleveling HMA shall be approved by the Engineer.

Before construction of HMA on an existing paved surface, the entire surface of the pavement shall be clean. All fatty asphalt patches, grease drippings, and other objectionable matter shall be entirely removed from the existing pavement. All pavements or bituminous surfaces shall be thoroughly cleaned of dust, soil, pavement grindings, and other foreign matter. All holes and small depressions shall be filled with an appropriate class of HMA. The surface of the patched area shall be leveled and compacted thoroughly. Prior to the application of tack coat, or paving, the condition of the surface shall be approved by the Engineer.

A tack coat of asphalt shall be applied to all paved surfaces on which any course of HMA is to be placed or abutted; except that tack coat may be omitted from clean, newly paved surfaces at the discretion of the Engineer. Tack coat shall be uniformly applied to cover the existing pavement with a thin film of residual asphalt free of streaks and bare spots at a rate between 0.02 and 0.10 gallons per square yard of retained asphalt. The rate of application shall be approved by the Engineer. A heavy application of tack coat shall be applied to all joints. For Roadways open to traffic, the application of tack coat shall be limited to surfaces that will be paved during the same working shift. The spreading equipment shall be equipped with a thermometer to indicate the temperature of the tack coat material.

Equipment shall not operate on tacked surfaces until the tack has broken and cured. If the Contractor's operation damages the tack coat it shall be repaired prior to placement of the HMA.

The tack coat shall be CSS-1, or CSS-1h emulsified asphalt. The CSS-1 and CSS-1h emulsified asphalt may be diluted once with water at a rate not to exceed one-part water to one-part emulsified asphalt. The tack coat shall have sufficient temperature such that it may be applied uniformly at the specified rate of application and shall not exceed the maximum temperature recommended by the emulsified asphalt manufacturer. PG grade asphalt or non-tracking tack formulas may be used upon approval of the Engineer.

Provided to Builders Exchange of WA, Inc. For usage Conditions Agreement see www.bxwa.com - Always Verify Scal

5-04.3(4)A Crack Sealing

When the Proposal includes a pay item for crack sealing, seal cracks in accordance with Section 5-03.

5-04.3(4)B Vacant

5-04.3(4)C Pavement Repair

The Contractor shall excavate pavement repair areas and shall backfill these with HMA in accordance with the details shown in the Plans and as marked in the field. The Contractor shall conduct the excavation operations in a manner that will protect the pavement that is to remain. Pavement not designated to be removed that is damaged as a result of the Contractor's operations shall be repaired by the Contractor to the satisfaction of the Engineer at no cost to the Contracting Agency. The Contractor shall excavate only within one lane at a time unless approved otherwise by the Engineer. The Contractor shall not excavate more area than can be completely finished during the same shift, unless approved by the Engineer.

Unless otherwise shown in the Plans or determined by the Engineer, excavate to a depth of 1.0 feet. The Engineer will make the final determination of the excavation depth required. The minimum width of any pavement repair area shall be 40 inches unless shown otherwise in the Plans. Before any excavation, the existing pavement shall be sawcut or shall be removed by a pavement grinder. Excavated materials will become the property of the Contractor and shall be disposed of in a Contractor-provided site off the Right of Way or used in accordance with Sections 2-02.3(3) or 9-03.21.

Asphalt for tack coat shall be required as specified in Section 5-04.3(4). A heavy application of tack coat shall be applied to all surfaces of existing pavement in the pavement repair area.

Placement of the HMA backfill shall be accomplished in lifts not to exceed 0.35-foot compacted depth. Lifts that exceed 0.35-foot of compacted depth may be accomplished with the approval of the Engineer. Each lift shall be thoroughly compacted by a mechanical tamper or a roller.

5-04.3(5) Producing/Stockpiling Aggregates and RAP

Aggregates and RAP shall be stockpiled according to the requirements of Section 3-02. Sufficient storage space shall be provided for each size of aggregate and RAP. Materials shall be removed from stockpile(s) in a manner to ensure minimal segregation when being moved to the HMA plant for processing into the final mixture. Different aggregate sizes shall be kept separated until they have been delivered to the HMA plant.

5-04.3(5)A Vacant

5-04.3(6) Mixing

After the required amount of mineral materials, asphalt binder, recycling agent and anti-stripping additives have been introduced into the mixer the HMA shall be mixed until

Provided to Builders Exchange of WA, Inc. For usage Conditions Agreement see www.bxwa.com - Always Verify Scal

complete and uniform coating of the particles and thorough distribution of the asphalt binder throughout the mineral materials is ensured.

When discharged, the temperature of the HMA shall not exceed the optimum mixing temperature by more than 25°F as shown on the reference mix design report or as approved by the Engineer. Also, when a WMA additive is included in the manufacture of HMA, the discharge temperature of the HMA shall not exceed the maximum recommended by the manufacturer of the WMA additive. A maximum water content of 2 percent in the mix, at discharge, will be allowed providing the water causes no problems with handling, stripping, or flushing. If the water in the HMA causes any of these problems, the moisture content shall be reduced as directed by the Engineer.

Storing or holding of the HMA in approved storage facilities will be permitted with approval of the Engineer, but in no event shall the HMA be held for more than 24 hours. HMA held for more than 24 hours after mixing shall be rejected. Rejected HMA shall be disposed of by the Contractor at no expense to the Contracting Agency. The storage facility shall have an accessible device located at the top of the cone or about the third point. The device shall indicate the amount of material in storage. No HMA shall be accepted from the storage facility when the HMA in storage is below the top of the cone of the storage facility, except as the storage facility is being emptied at the end of the working shift.

Recycled asphalt pavement (RAP) utilized in the production of HMA shall be sized prior to entering the mixer so that a uniform and thoroughly mixed HMA is produced. If there is evidence of the recycled asphalt pavement not breaking down during the heating and mixing of the HMA, the Contractor shall immediately suspend the use of the RAP until changes have been approved by the Engineer. After the required amount of mineral materials, RAP, new asphalt binder and asphalt rejuvenator have been introduced into the mixer the HMA shall be mixed until complete and uniform coating of the particles and thorough distribution of the asphalt binder throughout the mineral materials, and RAP is ensured.

5-04.3(7) Spreading and Finishing

The mixture shall be placed upon an approved surface, spread, and struck off to the grade and elevation established. HMA pavers complying with Section 5-04.3(3) shall be used to distribute the mixture. Unless otherwise directed by the Engineer, the nominal compacted depth of any layer of any course shall not exceed the following:

HMA Class 1”		0.35 feet
HMA Class ¾” and HMA Class ½”		
	wearing course	0.30 feet
	other courses	0.35 feet
HMA Class ⅜”		0.15 feet

On areas where irregularities or unavoidable obstacles make the use of mechanical spreading and finishing equipment impractical, the paving may be done with other equipment or by hand.

Provided to Builders Exchange of WA, Inc. For usage Conditions Agreement see www.bxwa.com - Always Verify Scal

When more than one JMF is being utilized to produce HMA, the material produced for each JMF shall be placed by separate spreading and compacting equipment. The intermingling of HMA produced from more than one JMF is prohibited. Each strip of HMA placed during a work shift shall conform to a single JMF established for the class of HMA specified unless there is a need to make an adjustment in the JMF.

5-04.3(8) Aggregate Acceptance Prior to Incorporation in HMA

For HMA accepted by nonstatistical evaluation, the aggregate properties of sand equivalent, uncompacted void content, and fracture will be evaluated in accordance with Section 3-04. Sampling and testing of aggregates for HMA accepted by commercial evaluation will be at the option of the Engineer.

5-04.3(9) HMA Mixture Acceptance

Acceptance of HMA shall be as provided under nonstatistical, or commercial evaluation.

Nonstatistical evaluation will be used for the acceptance of HMA unless Commercial Evaluation is specified.

Commercial evaluation will be used for Commercial HMA and for other classes of HMA in the following applications: sidewalks, road approaches, ditches, slopes, paths, trails, gores, prelevel, temporary pavement, and pavement repair. Other nonstructural applications of HMA accepted by commercial evaluation shall be as approved by the Engineer. Sampling and testing of HMA accepted by commercial evaluation will be at the option of the Engineer.

The mix design will be the initial JMF for the class of HMA. The Contractor may request a change in the JMF. Any adjustments to the JMF will require the approval of the Engineer and may be made in accordance with this section.

HMA Tolerances and Adjustments

1. **Job Mix Formula Tolerances –** The constituents of the mixture at the time of acceptance shall be within tolerance. The tolerance limits will be established as follows:

   For Asphalt Binder and Air Voids (Va), the acceptance limits are determined by adding the tolerances below to the approved JMF values. These values will also be the Upper Specification Limit (USL) and Lower Specification Limit (LSL) required in Section 1-06.2(2)D2

Property	Non-Statistical Evaluation	Commercial Evaluation
Asphalt Binder	+/- 0.5%	+/- 0.7%
Air Voids, Va	2.5% min. and 5.5% max	N/A

   For Aggregates in the mixture:

   a. First, determine preliminary upper and lower acceptance limits by applying the following tolerances to the approved JMF.

Provided to Builders Exchange of WA, Inc. For usage Conditions Agreement see www.bxwa.com - Always Verify Scal

Aggregate Percent Passing	Non-Statistical Evaluation	Commercial Evaluation
1", ¾", ½", and 3/8" sieves	+/- 6%	+/- 8%
No. 4 sieve	+/-6%	+/- 8%
No. 8 Sieve	+/- 6%	+/-8%
No. 200 sieve	+/- 2.0%	+/- 3.0%

b. Second, adjust the preliminary upper and lower acceptance limits determined from step (a) the minimum amount necessary so that none of the aggregate properties are outside the control points in Section 9-03.8(6), except as specified below in (c). The resulting values will be the upper and lower acceptance limits for aggregates, as well as the USL and LSL required in Section 1-06.2(2)D2.

c. These tolerances and specification limits constitute the allowable limits as described in Section 1-06.2. The tolerance limit for aggregate shall not exceed the limits of the control points, except the No. 8 tolerance is +/- 6% from the JMF, the No. 200 tolerance is +/- 2.0% from the JMF with a minimum of 2% and a maximum of 8.0% passing the No. 200 sieve. Other tolerance limits for sieves designated as 100 percent passing will be 99-100

2. **Job Mix Formula Adjustments** – An adjustment to the aggregate gradation or asphalt binder content of the JMF requires approval of the Engineer. Adjustments to the JMF will only be considered if the change produces material of equal or better quality and may require the development of a new mix design if the adjustment exceeds the amounts listed below.

a. **Aggregates** –2 percent for the aggregate passing the 1½″, 1″, ¾″, ½″, ⅜″, and the No. 4 sieves, 1 percent for aggregate passing the No. 8 sieve, and 0.5 percent for the aggregate passing the No. 200 sieve. The adjusted JMF shall be within the range of the control points in Section 9-03.8(6).

b. **Asphalt Binder Content** – The Engineer may order or approve changes to asphalt binder content. The maximum adjustment from the approved mix design for the asphalt binder content shall be 0.3 percent.

5-04.3(9)A Vacant

5-04.3(9)B Vacant

5-04.3(9)C Mixture Acceptance – Nonstatistical Evaluation

HMA mixture which is accepted by Nonstatistical Evaluation will be evaluated by the Contracting Agency by dividing the HMA tonnage into lots.

Provided to Builders Exchange of WA, Inc. For usage Conditions Agreement see www.bxwa.com - Always Verify Scal

5-04.3(9)C1 Mixture Nonstatistical Evaluation – Lots and Sublots

A lot is represented by randomly selected samples of the same mix design that will be tested for acceptance. A lot is defined as the total quantity of material or work produced for each Job Mix Formula placed. Only one lot per JMF is expected. A sublot shall be equal to one day's production or 800 tons, whichever is less except that the final sublot will be a minimum of 400 tons and may be increased to 1200 tons.

All of the test results obtained from the acceptance samples from a given lot shall be evaluated collectively. If the Contractor requests a change to the JMF that is approved, the material produced after the change will be evaluated on the basis of the new JMF for the remaining sublots in the current lot and for acceptance of subsequent lots. For a lot in progress with a CPF less than 0.75, a new lot will begin at the Contractor's request after the Engineer is satisfied that material conforming to the Specifications can be produced.

Sampling and testing for evaluation shall be performed on the frequency of one sample per sublot.

5-04.3(9)C2 Mixture Nonstatistical Evaluation Sampling

Samples for acceptance testing shall be obtained by the Contractor when ordered by the Engineer. The Contractor shall sample the HMA mixture in the presence of the Engineer and in accordance with AASHTO T 168. A minimum of three samples should be taken for each class of HMA placed on a project. If used in a structural application, at least one of the three samples shall be tested.

Sampling and testing HMA in a structural application where quantities are less than 400 tons is at the discretion of the Engineer.

For HMA used in a structural application and with a total project quantity less than 800 tons but more than 400 tons, a minimum of one acceptance test shall be performed. In all cases, a minimum of 3 samples will be obtained at the point of acceptance, a minimum of one of the three samples will be tested for conformance to the JMF:

- If the test results are found to be within specification requirements, additional testing will be at the Engineer's discretion.

- If test results are found not to be within specification requirements, additional testing of the remaining samples to determine a CPF shall be performed.

5-04.3(9)C3 Mixture Nonstatistical Evaluation – Acceptance Testing

Testing of HMA for compliance of V_a will at the option of the Contracting Agency. If tested, compliance of V_a will use WSDOT SOP 731.

Testing for compliance of asphalt binder content will be by WSDOT FOP for AASHTO T 308.

Provided to Builders Exchange of WA, Inc. For usage Conditions Agreement see www.bxwa.com - Always Verify Scal

Testing for compliance of gradation will be by FOP for WAQTC T 27/T 11.

5-04.3(9)C4 Mixture Nonstatistical Evaluation – Pay Factors

For each lot of material falling outside the tolerance limits in 5-04.3(9), the Contracting Agency will determine a CPF using the following price adjustment factors:

Table of Price Adjustment Factors	
Constituent	**Factor "f"**
All aggregate passing: 1½", 1", ¾", ½", ⅜" and No.4 sieves	2
All aggregate passing No. 8 sieve	15
All aggregate passing No. 200 sieve	20
Asphalt binder	40
Air Voids (Va) (where applicable)	20

Each lot of HMA produced under Nonstatistical Evaluation and having all constituents falling within the tolerance limits of the job mix formula shall be accepted at the unit Contract price with no further evaluation. When one or more constituents fall outside the nonstatistical tolerance limits in the Job Mix Formula shown in Table of Price Adjustment Factors, the lot shall be evaluated in accordance with Section 1-06.2 to determine the appropriate CPF. The nonstatistical tolerance limits will be used in the calculation of the CPF and the maximum CPF shall be 1.00. When less than three sublots exist, backup samples of the existing sublots or samples from the Roadway shall be tested to provide a minimum of three sets of results for evaluation.

5-04.3(9)C5 Vacant

5-04.3(9)C6 Mixture Nonstatistical Evaluation – Price Adjustments

For each lot of HMA mix produced under Nonstatistical Evaluation when the calculated CPF is less than 1.00, a Nonconforming Mix Factor (NCMF) will be determined. The NCMF equals the algebraic difference of CPF minus 1.00 multiplied by 60 percent. The total job mix compliance price adjustment will be calculated as the product of the NCMF, the quantity of HMA in the lot in tons, and the unit Contract price per ton of mix.

If a constituent is not measured in accordance with these Specifications, its individual pay factor will be considered 1.00 in calculating the CPF.

5-04.3(9)C7 Mixture Nonstatistical Evaluation - Retests

The Contractor may request a sublot be retested. To request a retest, the Contractor shall submit a written request within 7 calendar days after the specific test results have been received. A split of the original acceptance sample will be retested. The split of the sample will not be tested with the same tester that ran the original acceptance test. The sample will

Provided to Builders Exchange of WA, Inc. For usage Conditions Agreement see www.bxwa.com - Always Verify Scal

be tested for a complete gradation analysis, asphalt binder content, and, at the option of the agency, V_a. The results of the retest will be used for the acceptance of the HMA in place of the original sublot sample test results. The cost of testing will be deducted from any monies due or that may come due the Contractor under the Contract at the rate of $500 per sample.

5-04.3(9)D Mixture Acceptance – Commercial Evaluation

If sampled and tested, HMA produced under Commercial Evaluation and having all constituents falling within the tolerance limits of the job mix formula shall be accepted at the unit Contract price with no further evaluation. When one or more constituents fall outside the commercial tolerance limits in the Job Mix Formula shown in 5-04.3(9), the lot shall be evaluated in accordance with Section 1-06.2 to determine the appropriate CPF. The commercial tolerance limits will be used in the calculation of the CPF and the maximum CPF shall be 1.00. When less than three sublots exist, backup samples of the existing sublots or samples from the street shall be tested to provide a minimum of three sets of results for evaluation.

For each lot of HMA mix produced and tested under Commercial Evaluation when the calculated CPF is less than 1.00, a Nonconforming Mix Factor (NCMF) will be determined. The NCMF equals the algebraic difference of CPF minus 1.00 multiplied by 60 percent. The Job Mix Compliance Price Adjustment will be calculated as the product of the NCMF, the quantity of HMA in the lot in tons, and the unit Contract price per ton of mix.

If a constituent is not measured in accordance with these Specifications, its individual pay factor will be considered 1.00 in calculating the CPF.

5-04.3(10) HMA Compaction Acceptance

HMA mixture accepted by nonstatistical evaluation that is used in traffic lanes, including lanes for intersections, ramps, truck climbing, weaving, and speed change, and having a specified compacted course thickness greater than 0.10-foot, shall be compacted to a specified level of relative density. The specified level of relative density shall be a CPF of not less than 0.75 when evaluated in accordance with Section 1-06.2, using a LSL of 92.0 (minimum of 92 percent of the maximum density). The maximum density shall be determined by WSDOT FOP for AASHTO T 729. The specified level of density attained will be determined by the evaluation of the density of the pavement. The density of the pavement shall be determined in accordance with WSDOT FOP for WAQTC TM 8, except that gauge correlation will be at the discretion of the Engineer, when using the nuclear density gauge and WSDOT SOP 736 when using cores to determine density.

Tests for the determination of the pavement density will be taken in accordance with the required procedures for measurement by a nuclear density gauge or Roadway cores after completion of the finish rolling.

If the Contracting Agency uses a nuclear density gauge to determine density the test procedures FOP for WAQTC TM 8 and WSDOT SOP T 729 will be used on the day the mix is placed and prior to opening to traffic.

Provided to Builders Exchange of WA, Inc. For usage Conditions Agreement see www.bxwa.com - Always Verify Scal

Roadway cores for density may be obtained by either the Contracting Agency or the Contractor in accordance with WSDOT SOP 734. The core diameter shall be 4-inches minimum, unless otherwise approved by the Engineer. Roadway cores will be tested by the Contracting Agency in accordance with WSDOT FOP for AASHTO T 166.

If the Contract includes the Bid item "Roadway Core", the cores shall be obtained by the Contractor in the presence of the Engineer on the same day the mix is placed and at locations designated by the Engineer. If the Contract does not include the Bid item "Roadway Core", the Contracting Agency will obtain the cores.

For a lot in progress with a CPF less than 0.75, a new lot will begin at the Contractor's request after the Engineer is satisfied that material conforming to the Specifications can be produced.

HMA mixture accepted by commercial evaluation and HMA constructed under conditions other than those listed above shall be compacted on the basis of a test point evaluation of the compaction train. The test point evaluation shall be performed in accordance with instructions from the Engineer. The number of passes with an approved compaction train, required to attain the maximum test point density, shall be used on all subsequent paving.

HMA for preleveling shall be thoroughly compacted. HMA that is used for preleveling wheel rutting shall be compacted with a pneumatic tire roller unless otherwise approved by the Engineer.

Test Results

For a sublot that has been tested with a nuclear density gauge that did not meet the minimum of 92 percent of the reference maximum density in a compaction lot with a CPF below 1.00 and thus subject to a price reduction or rejection, the Contractor may request that a core be used for determination of the relative density of the sublot. The relative density of the core will replace the relative density determined by the nuclear density gauge for the sublot and will be used for calculation of the CPF and acceptance of HMA compaction lot.

When cores are taken by the Contracting Agency at the request of the Contractor, they shall be requested by noon of the next workday after the test results for the sublot have been provided or made available to the Contractor. Core locations shall be outside of wheel paths and as determined by the Engineer. Traffic control shall be provided by the Contractor as requested by the Engineer. Failure by the Contractor to provide the requested traffic control will result in forfeiture of the request for cores. When the CPF for the lot based on the results of the HMA cores is less than 1.00, the cost for the coring will be deducted from any monies due or that may become due the Contractor under the Contract at the rate of $200 per core and the Contractor shall pay for the cost of the traffic control.

5-04.3(10)A HMA Compaction – General Compaction Requirements

Compaction shall take place when the mixture is in the proper condition so that no undue displacement, cracking, or shoving occurs. Areas inaccessible to large compaction equipment shall be compacted by other mechanical means. Any HMA that becomes loose,

Provided to Builders Exchange of WA, Inc. For usage Conditions Agreement see www.bxwa.com - Always Verify Scal

broken, contaminated, shows an excess or deficiency of asphalt, or is in any way defective, shall be removed and replaced with new hot mix that shall be immediately compacted to conform to the surrounding area.

The type of rollers to be used and their relative position in the compaction sequence shall generally be the Contractor's option, provided the specified densities are attained. Unless the Engineer has approved otherwise, rollers shall only be operated in the static mode when the internal temperature of the mix is less than 175°F. Regardless of mix temperature, a roller shall not be operated in a mode that results in checking or cracking of the mat. Rollers shall only be operated in static mode on bridge decks.

5-04.3(10)B HMA Compaction - Cyclic Density

Low cyclic density areas are defined as spots or streaks in the pavement that are less than 90 percent of the theoretical maximum density. At the Engineer's discretion, the Engineer may evaluate the HMA pavement for low cyclic density, and when doing so will follow WSDOT SOP 733. A $1500 Cyclic Density Price Adjustment will be assessed for any 500-foot section with two or more density readings below 90 percent of the theoretical maximum density.

5-04.3(10)C Vacant

5-04.3(10)D HMA Nonstatistical Compaction

5-04.3(10)D1 HMA Nonstatistical Compaction - Lots and Sublots

HMA compaction which is accepted by nonstatistical evaluation will be based on acceptance testing performed by the Contracting Agency dividing the project into compaction lots.

A lot is represented by randomly selected samples of the same mix design that will be tested for acceptance. A lot is defined as the total quantity of material or work produced for each Job Mix Formula placed. Only one lot per JMF is expected. A sublot shall be equal to one day's production or 400 tons, whichever is less except that the final sublot will be a minimum of 200 tons and may be increased to 800 tons. Testing for compaction will be at the rate of 5 tests per sublot per WSDOT T 738.

The sublot locations within each density lot will be determined by the Engineer. For a lot in progress with a CPF less than 0.75, a new lot will begin at the Contractor's request after the Engineer is satisfied that material conforming to the Specifications can be produced.

HMA mixture accepted by commercial evaluation and HMA constructed under conditions other than those listed above shall be compacted on the basis of a test point evaluation of the compaction train. The test point evaluation shall be performed in accordance with instructions from the Engineer. The number of passes with an approved compaction train, required to attain the maximum test point density, shall be used on all subsequent paving.

HMA for preleveling shall be thoroughly compacted. HMA that is used to prelevel wheel ruts shall be compacted with a pneumatic tire roller unless otherwise approved by the Engineer.

Provided to Builders Exchange of WA, Inc. For usage Conditions Agreement see www.bxwa.com - Always Verify Scal

5-04.3(10)D2 HMA Compaction Nonstatistical Evaluation – Acceptance Testing

The location of the HMA compaction acceptance tests will be randomly selected by the Engineer from within each sublot, with one test per sublot.

5-04.3(10)D3 HMA Nonstatistical Compaction – Price Adjustments

For each compaction lot with one or two sublots, having all sublots attain a relative density that is 92 percent of the reference maximum density the HMA shall be accepted at the unit Contract price with no further evaluation. When a sublot does not attain a relative density that is 92 percent of the reference maximum density, the lot shall be evaluated in accordance with Section 1-06.2 to determine the appropriate CPF. The maximum CPF shall be 1.00, however, lots with a calculated CPF in excess of 1.00 will be used to offset lots with CPF values below 1.00 but greater than 0.90. Lots with CPF lower than 0.90 will be evaluated for compliance per 5-04.3(11). Additional testing by either a nuclear moisture-density gauge or cores will be completed as required to provide a minimum of three tests for evaluation.

For compaction below the required 92%, a Non-Conforming Compaction Factor (NCCF) will be determined. The NCCF equals the algebraic difference of CPF minus 1.00 multiplied by 40 percent. The Compaction Price Adjustment will be calculated as the product of CPF, the quantity of HMA in the compaction control lot in tons, and the unit Contract price per ton of mix.

5-04.3(11) Reject Work

5-04.3(11)A Reject Work General

Work that is defective or does not conform to Contract requirements shall be rejected. The Contractor may propose, in writing, alternatives to removal and replacement of rejected material. Acceptability of such alternative proposals will be determined at the sole discretion of the Engineer. HMA that has been rejected is subject to the requirements in Section 1-06.2(2) and this specification, and the Contractor shall submit a corrective action proposal to the Engineer for approval.

5-04.3(11)B Rejection by Contractor

The Contractor may, prior to sampling, elect to remove any defective material and replace it with new material. Any such new material will be sampled, tested, and evaluated for acceptance.

5-04.3(11)C Rejection Without Testing (Mixture or Compaction)

The Engineer may, without sampling, reject any batch, load, or section of Roadway that appears defective. Material rejected before placement shall not be incorporated into the pavement. Any rejected section of Roadway shall be removed.

No payment will be made for the rejected materials or the removal of the materials unless the Contractor requests that the rejected material be tested. If the Contractor elects to have the rejected material tested, a minimum of three representative samples will be obtained

Provided to Builders Exchange of WA, Inc. For usage Conditions Agreement see www.bxwa.com - Always Verify Scal

and tested. Acceptance of rejected material will be based on conformance with the nonstatistical acceptance Specification. If the CPF for the rejected material is less than 0.75, no payment will be made for the rejected material; in addition, the cost of sampling and testing shall be borne by the Contractor. If the CPF is greater than or equal to 0.75, the cost of sampling and testing will be borne by the Contracting Agency. If the material is rejected before placement and the CPF is greater than or equal to 0.75, compensation for the rejected material will be at a CPF of 0.75. If rejection occurs after placement and the CPF is greater than or equal to 0.75, compensation for the rejected material will be at the calculated CPF with an addition of 25 percent of the unit Contract price added for the cost of removal and disposal.

5-04.3(11)D Rejection - A Partial Sublot

In addition to the random acceptance sampling and testing, the Engineer may also isolate from a normal sublot any material that is suspected of being defective in relative density, gradation or asphalt binder content. Such isolated material will not include an original sample location. A minimum of three random samples of the suspect material will be obtained and tested. The material will then be statistically evaluated as an independent lot in accordance with Section 1-06.2(2).

5-04.3(11)E Rejection - An Entire Sublot

An entire sublot that is suspected of being defective may be rejected. When a sublot is rejected a minimum of two additional random samples from this sublot will be obtained. These additional samples and the original sublot will be evaluated as an independent lot in accordance with Section 1-06.2(2).

5-04.3(11)F Rejection - A Lot in Progress

The Contractor shall shut down operations and shall not resume HMA placement until such time as the Engineer is satisfied that material conforming to the Specifications can be produced:

1. When the CPF of a lot in progress drops below 1.00 and the Contractor is taking no corrective action, or
2. When the Pay Factor (PF) for any constituent of a lot in progress drops below 0.95 and the Contractor is taking no corrective action, or
3. When either the PF for any constituent or the CPF of a lot in progress is less than 0.75.

5-04.3(11)G Rejection - An Entire Lot (Mixture or Compaction)

An entire lot with a CPF of less than 0.75 will be rejected.

Provided to Builders Exchange of WA, Inc. For usage Conditions Agreement see www.bxwa.com - Always Verify Scal

5-04.3(12) Joints

5-04.3(12)A HMA Joints

5-04.3(12)A1 Transverse Joints

The Contractor shall conduct operations such that the placing of the top or wearing course is a continuous operation or as close to continuous as possible. Unscheduled transverse joints will be allowed, and the roller may pass over the unprotected end of the freshly placed mixture only when the placement of the course must be discontinued for such a length of time that the mixture will cool below compaction temperature. When the Work is resumed, the previously compacted mixture shall be cut back to produce a slightly beveled edge for the full thickness of the course.

A temporary wedge of HMA constructed on a 20H:1V shall be constructed where a transverse joint as a result of paving or planing is open to traffic. The HMA in the temporary wedge shall be separated from the permanent HMA by strips of heavy wrapping paper or other methods approved by the Engineer. The wrapping paper shall be removed and the joint trimmed to a slightly beveled edge for the full thickness of the course prior to resumption of paving.

The material that is cut away shall be wasted and new mix shall be placed against the cut. Rollers or tamping irons shall be used to seal the joint.

5-04.3(12)A2 Longitudinal Joints

The longitudinal joint in any one course shall be offset from the course immediately below by not more than 6 inches nor less than 2 inches. All longitudinal joints constructed in the wearing course shall be located at a lane line or an edge line of the Traveled Way. A notched wedge joint shall be constructed along all longitudinal joints in the wearing surface of new HMA unless otherwise approved by the Engineer. The notched wedge joint shall have a vertical edge of not less than the maximum aggregate size or more than ½ of the compacted lift thickness and then taper down on a slope not steeper than 4H:1V. The sloped portion of the HMA notched wedge joint shall be uniformly compacted.

5-04.3(12)B Bridge Paving Joint Seals

Bridge Paving Joint Seals shall be in accordance with Section 5-03.

5-04.3(13) Surface Smoothness

The completed surface of all courses shall be of uniform texture, smooth, uniform as to crown and grade, and free from defects of all kinds. The completed surface of the wearing course shall not vary more than ⅛ inch from the lower edge of a 10-foot straightedge placed on the surface parallel to the centerline. The transverse slope of the completed surface of the wearing course shall vary not more than ¼ inch in 10 feet from the rate of transverse slope shown in the Plans.

When deviations in excess of the above tolerances are found that result from a high place in the HMA, the pavement surface shall be corrected by one of the following methods:

Provided to Builders Exchange of WA, Inc. For usage Conditions Agreement see www.bxwa.com - Always Verify Scal

1. Removal of material from high places by grinding with an approved grinding machine, or

2. Removal and replacement of the wearing course of HMA, or

3. By other method approved by the Engineer.

Correction of defects shall be carried out until there are no deviations anywhere greater than the allowable tolerances.

Deviations in excess of the above tolerances that result from a low place in the HMA and deviations resulting from a high place where corrective action, in the opinion of the Engineer, will not produce satisfactory results will be accepted with a price adjustment. The Engineer shall deduct from monies due or that may become due to the Contractor the sum of $1500.00 for each and every section of single traffic lane 100 feet in length in which any excessive deviations described above are found.

When utility appurtenances such as manhole covers and valve boxes are located in the traveled way, the utility appurtenances shall be adjusted to the finished grade prior to paving. This requirement may be waived when requested by the Contractor, at the discretion of the Engineer or when the adjustment details provided in the project plan or specifications call for utility appurtenance adjustments after the completion of paving.

Utility appurtenance adjustment discussions will be included in the Pre-Paving and Pre-Planing Briefing (5-04.3(14)B3). Submit a written request to waive this requirement to the Engineer prior to the start of paving.

5-04.3(14) Planing (Milling) Bituminous Pavement

The planing plan must be approved by the Engineer and a pre-planing meeting must be held prior to the start of any planing. See Section 5-04.3(14)B2 for information on planing submittals.

Where planing an existing pavement is specified in the Contract, the Contractor must remove existing surfacing material and to reshape the surface to remove irregularities. The finished product must be a prepared surface acceptable for receiving an HMA overlay.

Use the cold milling method for planing unless otherwise specified in the Contract. Do not use the planer on the final wearing course of new HMA.

Conduct planing operations in a manner that does not tear, break, burn, or otherwise damage the surface which is to remain. The finished planed surface must be slightly grooved or roughened and must be free from gouges, deep grooves, ridges, or other imperfections. The Contractor must repair any damage to the surface by the Contractor's planing equipment, using an Engineer approved method.

Provided to Builders Exchange of WA, Inc. For usage Conditions Agreement see www.bxwa.com - Always Verify Scal

Repair or replace any metal castings and other surface improvements damaged by planing, as determined by the Engineer.

A tapered wedge cut must be planed longitudinally along curb lines sufficient to provide a minimum of 4 inches of curb reveal after placement and compaction of the final wearing course. The dimensions of the wedge must be as shown on the Drawings or as specified by the Engineer.

A tapered wedge cut must also be made at transitions to adjoining pavement surfaces (meet lines) where butt joints are shown on the Drawings. Cut butt joints in a straight line with vertical faces 2 inches or more in height, producing a smooth transition to the existing adjoining pavement.

After planing is complete, planed surfaces must be swept, cleaned, and if required by the Contract, patched and preleveled.

The Engineer may direct additional depth planing. Before performing this additional depth planing, the Contractor must conduct a hidden metal in pavement detection survey as specified in Section 5-04.3(14)A.

5-04.3(14)A Pre-Planing Metal Detection Check

Before starting planing of pavements, and before any additional depth planing required by the Engineer, the Contractor must conduct a physical survey of existing pavement to be planed with equipment that can identify hidden metal objects.

Should such metal be identified, promptly notify the Engineer.

See Section 1-07.16(1) regarding the protection of survey monumentation that may be hidden in pavement.

The Contractor is solely responsible for any damage to equipment resulting from the Contractor's failure to conduct a pre-planing metal detection survey, or from the Contractor's failure to notify the Engineer of any hidden metal that is detected.

5-04.3(14)B Paving and Planing Under Traffic

5-04.3(14)B1 General

In addition, the requirements of Section 1-07.23 and the traffic controls required in Section 1-10, and unless the Contract specifies otherwise or the Engineer approves, the Contractor must comply with the following:

1. Intersections:

Provided to Builders Exchange of WA, Inc. For usage Conditions Agreement see www.bxwa.com - Always Verify Scal

a. Keep intersections open to traffic at all times, except when paving or planing operations through an intersection requires closure. Such closure must be kept to the minimum time required to place and compact the HMA mixture, or plane as appropriate. For paving, schedule such closure to individual lanes or portions thereof that allows the traffic volumes and schedule of traffic volumes required in the approved traffic control plan. Schedule work so that adjacent intersections are not impacted at the same time and comply with the traffic control restrictions required by the Traffic Engineer. Each individual intersection closure or partial closure must be addressed in the traffic control plan, which must be submitted to and accepted by the Engineer, see Section 1-10.2(2).

b. When planing or paving and related construction must occur in an intersection, consider scheduling and sequencing such work into quarters of the intersection, or half or more of an intersection with side street detours. Be prepared to sequence the work to individual lanes or portions thereof.

c. Should closure of the intersection in its entirety be necessary, and no trolley service is impacted, keep such closure to the minimum time required to place and compact the HMA mixture, plane, remove asphalt, tack coat, and as needed.

d. Any work in an intersection requires advance warning in both signage and a number of Working Days advance notice as determined by the Engineer, to alert traffic and emergency services of the intersection closure or partial closure.

e. Allow new compacted HMA asphalt to cool to ambient temperature before any traffic is allowed on it. Traffic is not allowed on newly placed asphalt until approval has been obtained from the Engineer.

2. Temporary centerline marking, post-paving temporary marking, temporary stop bars, and maintaining temporary pavement marking must comply with Section 8-23.

3. Permanent pavement marking must comply with Section 8-22.

5-04.3(14)B2 Submittals - Planing Plan and HMA Paving Plan

The Contractor must submit a separate planing plan and a separate paving plan to the Engineer at least 5 Working Days in advance of each operation's activity start date. These plans must show how the moving operation and traffic control are coordinated, as they will be discussed at the pre-planing briefing and pre-paving briefing. When requested by the Engineer, the Contractor must provide each operation's traffic control plan on 24 x 36 inch or larger size Shop Drawings with a scale showing both the area of operation and sufficient detail of traffic beyond the area of operation where detour traffic may be required. The scale on the Shop Drawings is 1 inch = 20 feet, which may be changed if the Engineer agrees sufficient detail is shown.

The planing operation and the paving operation include, but are not limited to, metal detection, removal of asphalt and temporary asphalt of any kind, tack coat and drying,

Provided to Builders Exchange of WA, Inc. For usage Conditions Agreement see www.bxwa.com - Always Verify Scal

staging of supply trucks, paving trains, rolling, scheduling, and as may be discussed at the briefing.

When intersections will be partially or totally blocked, provide adequately sized and noticeable signage alerting traffic of closures to come, a minimum 2 Working Days in advance. The traffic control plan must show where police officers will be stationed when signalization is or may be, countermanded, and show areas where flaggers are proposed.

At a minimum, the planing and the paving plan must include:

1. A copy of the accepted traffic control plan, see Section 1-10.2(2), detailing each day's traffic control as it relates to the specific requirements of that day's planing and paving. Briefly describe the sequencing of traffic control consistent with the proposed planing and paving sequence, and scheduling of placement of temporary pavement markings and channelizing devices after each day's planing, and paving.

2. A copy of each intersection's traffic control plan.

3. Haul routes from supplier facilities, and locations of temporary parking and staging areas, including return routes. Describe the complete round trip as it relates to the sequencing of paving operations.

4. Names and locations of HMA supplier facilities to be used.

5. List of all equipment to be used for paving.

6. List of personnel and associated job classification assigned to each piece of paving equipment.

7. Description (geometric or narrative) of the scheduled sequence of planing and of paving and intended area of planing and of paving for each day's work, must include the directions of proposed planing and of proposed paving, sequence of adjacent lane paving, sequence of skipped lane paving, intersection planing and paving scheduling and sequencing, and proposed notifications and coordinations to be timely made. The plan must show HMA joints relative to the final pavement marking lane lines.

8. Names, job titles, and contact information for field, office, and plant supervisory personnel.

9. A copy of the approved Mix Designs.

10. Tonnage of HMA to be placed each day.

11. Approximate times and days for starting and ending daily operations.

Provided to Builders Exchange of WA, Inc. For usage Conditions Agreement see www.bxwa.com - Always Verify Scal

5-04.3(14)B3 Pre-Paving and Pre-Planing Briefing

At least 2 Working Days before the first paving operation and the first planing operation, or as scheduled by the Engineer for future paving and planing operations to ensure the Contractor has adequately prepared for notifying and coordinating as required in the Contract, the Contractor must be prepared to discuss that day's operations as they relate to other entities and to public safety and convenience, including driveway and business access, garbage truck operations, transit operations and working around energized overhead wires, school and nursing home and hospital and other accesses, other Contractors who may be operating in the area, pedestrian and bicycle traffic, and emergency services. The Contractor, and Subcontractors that may be part of that day's operations, must meet with the Engineer and discuss the proposed operation as it relates to the submitted planing plan and paving plan, approved traffic control plan, and public convenience and safety. Such discussion includes, but is not limited to:

1. General for both the Paving and Planing:

a. The actual times of starting and ending daily operations.

b. In intersections, how to break up the intersection, and address traffic control and signalization for that operation, including use of peace officers.

c. The sequencing and scheduling of paving operations and of planing operations, as applicable, as it relates to traffic control, public convenience and safety, and other Contractors who may operate in the Project limits.

d. Notifications required of Contractor activities and coordinating with other entities and the public as necessary.

e. Description of the sequencing of installation and types of temporary pavement markings as it relates to planing and paving.

f. Description of the sequencing of installation of, and the removal of, temporary pavement patch material around exposed castings and as may be needed.

g. Description of procedures and equipment to identify hidden metal in the pavement, such as survey monumentation, monitoring wells, streetcar rail, and castings, before planing as per Section 5-04.3(14)B2.

h. Description of how flaggers will be coordinated with the planing, paving, and related operations.

i. Description of sequencing of traffic controls for the process of rigid pavement base repairs.

Provided to Builders Exchange of WA, Inc. For usage Conditions Agreement see www.bxwa.com - Always Verify Scal

j. Other items the Engineer deems necessary to address.

2. Paving – additional topics:

a. When to start applying tack and coordinating with paving.

b. Types of equipment and numbers of each type of equipment to be used. If more pieces of equipment than personnel are proposed, describe the sequencing of the personnel operating the types of equipment. Discuss the continuance of operator personnel for each type of equipment as it relates to meeting Specification requirements.

c. Number of JMFs to be placed, and if more than one JMF is used, how the Contractor will ensure different JMFs are distinguished, how pavers and how MTVs are distinguished, and how pavers and MTVs are cleaned so that one JMF does not adversely influence the other JMF.

d. Description of contingency plans for that day's operations such as equipment breakdown, rain out, and supplier shutdown of operations.

e. Number of sublots to be placed, sequencing of density testing, and other sampling and testing.

5-04.3(15) Sealing Pavement Surfaces

Apply a fog seal where shown in the plans. Construct the fog seal in accordance with Section 5-02.3. Unless otherwise approved by the Engineer, apply the fog seal prior to opening to traffic.

5-04.3(16) HMA Road Approaches

Construct HMA approaches at the locations shown in the Plans or where staked by the Engineer, in accordance with Section 5-04.

5-04.4 Measurement

HMA Cl. ___ PG ___, HMA for ___ Cl. ___ PG ___, and Commercial HMA will be measured by the ton in accordance with Section 1-09.2, with no deduction being made for the weight of asphalt binder, mineral filler, or any other component of the mixture. If the Contractor elects to remove and replace mix as allowed by Section 5-04.3(11), the material removed will not be measured.

Roadway cores will be measured per each for the number of cores taken.

Pavement repair excavation will be measured by the square yard of surface marked prior to excavation.

Provided to Builders Exchange of WA, Inc. For usage Conditions Agreement see www.bxwa.com - Always Verify Scal

Planing bituminous pavement will be measured by the square yard.

5-04.5 Payment

Payment will be made for each of the following Bid items that are included in the Proposal:

"HMA Cl. ___ PG ___", per ton.
"HMA for Approach Cl. ___ PG ___", per ton.
"HMA for Preleveling Cl. ___ PG ___", per ton.
"HMA for Pavement Repair Cl. ___ PG ___", per ton.
"Commercial HMA", per ton.
The unit Contract price per ton for "HMA Cl. ___ PG ___", "HMA for Approach Cl. ___ PG ___", "HMA for Preleveling Cl. ___ PG ___", "HMA for Pavement Repair Cl. ___ PG ___", and "Commercial HMA" shall be full compensation for all costs, including anti-stripping additive, incurred to carry out the requirements of Section 5-04 except for those costs included in other items which are included in this Subsection and which are included in the Proposal.

"Pavement Repair Excavation Incl. Haul", per square yard.
The unit Contract price per square yard for "Pavement Repair Excavation Incl. Haul" shall be full payment for all costs incurred to perform the Work described in Section 5-04.3(4) with the exception, however, that all costs involved in the placement of HMA shall be included in the unit Contract price per ton for "HMA for Pavement Repair Cl. ___ PG ___", per ton.

"Planing Bituminous Pavement", per square yard.
The unit Contract price per square yard for "Planing Bituminous Pavement" shall be full payment for all costs incurred to perform the Work described in Section 5-04.3(14).

"Job Mix Compliance Price Adjustment", by calculation.
"Job Mix Compliance Price Adjustment" will be calculated and paid for as described in Section 5-04.3(9)C6.

"Compaction Price Adjustment", by calculation.
"Compaction Price Adjustment" will be calculated and paid for as described in Section 5-04.3(10)D3.

"Roadway Core", per each.
The Contractor's costs for all Work associated with the coring (e.g., traffic control) shall be incidental and included in the unit Bid price per each.

"Cyclic Density Price Adjustment", by calculation.
"Cyclic Density Price Adjustment" will be calculated and paid for as described in Section 5-04.3(10)B.

5-05 Cement Concrete Pavement

5-05.1 Description

Section 5-05.1 is supplemented with the following:

Provided to Builders Exchange of WA, Inc. For usage Conditions Agreement see www.bxwa.com - Always Verify Scal

This work consists of constructing pigmented cement concrete pavement with a sand finish. This work also consists of jointing and aesthetic sawcut scoring lines, at the locations to be identified in the Contractor-provided jointing plan for approval.

5-05.2 Materials

Section 5-05.2 is supplemented with the following:

Pigment color for cement conc. pavement shall be:

Davis Colors, Light Gray 860.

The Contractor may propose any brand of equal color for review and approval by the Engineer.

5-05.3 Construction Requirements

Section 5-05.3 is supplemented with the following:

(August 6, 2012 WSDOT GSP)
Pigmented Cement Concrete
Curing shall be in accordance with Section 5-05.3(13) and be applied to the surface in accordance with the manufacturer's recommendations. If liquid membrane-forming concrete curing compound is used it shall meet the requirements of ASTM C 309 Type 1-D.

A minimum of fourteen (14) days prior to the start of this element of work, the Contractor shall provide a 2 foot by 2 foot sample panel, that has been cured a minimum seven days, showing the color of cement concrete to the Engineer for acceptance before placing any pigmented cement concrete pavement.

5-05.3(5) Mixing Concrete

Section 5-05.3(5) is supplemented with the following:

Mixing Concrete (For Colored Stamped Concrete Pavement)
Mix specified integral color into concrete mix as directed by manufacturer.

5-05.3(7) Placing, Spreading, and Compacting Concrete

Section 5-05.3(7) is supplemented with the following:

Placing, Spreading, and Compacting Concrete (For Colored stamped Concrete Pavement)
The concrete shall be placed and screeded to the finished grade, and floated to a uniform surface using standard finishing techniques.

5-05.3(8) Joints

Section 5-05.3(8) is supplemented with the following:

Where cement concrete pavement is used in park plaza, the Contractor shall submit a detailed Jointing to the Engineer for review and approval. The jointing

Provided to Builders Exchange of WA, Inc. For usage Conditions Agreement see www.bxwa.com - Always Verify Scal

plan shall be submitted ten (10) working days in advance of beginning of the cement concrete forms being set. The Jointing Plan shall include jointing around Structures. For the roadway, the jointing plan shall include specific identification and location of construction joints, contraction joints, isolation joints, and the aesthetic sawcut score lines. The Jointing Plan shall also include the Contractor's crack control methods.

5-05.3(11) Finishing

Section 5-05.3(11) is supplemented with the following:

Finishing (For Pigmented Cement Conc. Pavement)

Aesthetic scoring lines shall be sawcut at a 1-inch depth. Sawcutting shall occur no sooner than 48 hours after the cement concrete has been placed.

5-05.4 Measurement

Section 5-05.4 is supplemented with the following:

Pigmented cement concrete pavement will be measured by the square yard for the completed pavement.

5-05.5 Payment

Section 5-05.5 is supplemented with the following:

"Pigmented Cement Conc. Pavement", per square yard.
The unit Contract price per square yard for "Pigmented Cement Conc. Pavement" shall be full compensation for all costs incurred to carry out the applicable requirements of Section 5-05, including pigment, jointing, and scoring.

END OF DIVISION 5

Provided to Builders Exchange of WA, Inc. For usage Conditions Agreement see www.bxwa.com - Always Verify Scal

Division 6
Structures

6-04 Timber Structures

6-04.2 Construction Requirements

Section 6-04.2 is deleted and replaced with the following:

Materials shall meet the requirements as noted and detailed on drawings numbered S1.1 through S1.3 in the Contract Plans.

6-04.4 Measurement

Section 6-04.4 is supplemented with the following:

Gazebo structure will be paid by lump sum.

6-04.5 Payment

Section 6-04.5 is deleted and replaced with the following:

"Gazebo Structure", lump sum.
The lump sum Contract price for "Gazebo Structure" shall be full pay for the construction of the complete gazebo structure and foundation pad. All additional materials and labor not shown in the Plans which are required to complete the construction of the gazebo structure and foundation pad shall be included in the lump sum Contract price.

Provided to Builders Exchange of WA, Inc. For usage Conditions Agreement see www.bxwa.com - Always Verify Scal

Division 7
Drainage Structures, Storm Sewers, Sanitary Sewers, Water Mains, and Conduits

7-01 Drains

7-01.1 Description

Section 7-01.1 is supplemented with the following:

This Work includes furnishing and constructing storm drain cleanouts in accordance with these Specifications and as detailed in the Plans.

7-01.2 Materials

Section 7-01.2 is supplemented with the following:

Storm drain cleanout materials shall meet the requirements of Section 9-05.1(5), PVC Drain Pipe, Couplings, and Fittings.

7-01.3 Construction Requirements

Section 7-01.3 is supplemented with the following:

A cleanout shall be provided at the locations shown in the Plans, for each total change of 90 degrees of grade or alignment.

All cleanouts shall be extended to grade. When extended to grade, cleanouts shall be extended to a point not less than 4 inches nor more than 6 inches below the finished ground surface and shall be plugged with a removable stopper, which will prevent passage of dirt or water. An access box shall be installed at the finished ground surface of each storm drain cleanout.

Storm drain cleanouts shall include #10 wire to serve as a magnetic location finder.

7-01.4 Measurement

Section 7-01.4 is supplemented with the following:

Storm drain cleanouts will be measured per each.

7-01.5 Payment

Section 7-01.5 is supplemented with the following:

"Storm Drain Cleanout 8 In. Diam.", per each.
The unit Contract price per each for "Storm Drain Cleanout 8 In. Diam." shall be full pay to perform the Work as specified including PVC cleanout elements, removable stopper, access box and cover, wire, excavation, and backfill.

7-04 Storm Sewers

Provided to Builders Exchange of WA, Inc. For usage Conditions Agreement see www.bxwa.com - Always Verify Scal

7-04.5 Payment

Section 7-04.5 is supplemented with the following:

(******)

The unit Contract price per linear foot for storm sewer pipe of any kind and size specified shall include furnishing and installing tracer/locator tape.

7-05 Manholes, Inlets, Catch Basins, and Drywells

7-05.3 Construction Requirements

7-05.3(1) Adjusting Catch Basins and Manholes to Grade

Section 7-05.3(1) is supplemented with the following:

(******)

All manholes and catch basins shall be adjusted to finished grade after paving operations are complete. The Contractor shall adjust the drainage structure using concrete risers or adjustment rings, or by other necessary means approved by the Engineer, in accordance with Contracting Agency standards, to the satisfaction of the Engineer. If brick risers are present, they shall be replaced with concrete.

All catch basins and manholes for storm sewers shall be grouted water tight, including under frames, rims, manhole barrel, riser sections, and pipe collars.

7-05.4 Measurement

The third paragraph of Section 7-05.4 is revised to read as follows:

(******)

Adjustment of manholes, catch basins, and inlets will be made separately per each structure after raising to finished grade.

7-05.5 Payment

Section 7-05.5 is supplemented with the following:

"Adjust Drainage Structure to Finished Grade", per each.

The unit Contract price per each for "Adjust Drainage Structure to Finished Grade" shall be full pay for all costs necessary make the raising adjustment, including restoration of adjacent areas, in a manner acceptable to the Engineer, including removal and replacement of existing risers; including, but not limited to existing concrete or brick risers. For the purpose of this pay item, the term "Drainage Structure" is intended to include storm sewer catch basins and inlets.

END OF DIVISION 7

Provided to Builders Exchange of WA, Inc. For usage Conditions Agreement see www.bxwa.com - Always Verify Scal

Division 8
Miscellaneous Construction

8-01 Erosion Control and Water Pollution Control

8-01.1 Description

Section 8-01.1 is supplemented with the following:

This Work shall consist of preparing and implementing a Stormwater Pollution Prevention Plan (SWPPP).

8-01.3 Construction Requirements

8-01.3(1) General

8-01.3(1)A Submittals

Section 8-01.3(1)A is supplemented with the following:

Prior to beginning Work, the Contractor shall prepare a Stormwater Pollution Prevention Plan (SWPPP) as part of the TESC Plan, meeting the requirements of the 2005 Washington State Department of Ecology's *Stormwater Management Manual for Western Washington Volume II – Construction Stormwater Pollution Prevention*, and the Department of Ecology's *Construction Stormwater General Permit*. These documents are available here:

Stormwater Manual:
https://apps.ecology.wa.gov/publications/documents/0510029.pdf

General Permit:
http://www.ecy.wa.gov/programs/wq/Stormwater/construction/resourcesguidance.html

The Contractor shall obtain the Engineer's approval of the SWPPP for implementation before any Work begins. The SWPPP shall cover all areas that the Contractor's Work may affect inside and outside the limits of the project, and shall include all necessary measures to comply with the Construction Stormwater General Permit's conditions.

The Contractor shall include a copy of the SWPPP document and subsequent SWPPP revisions made during the project in inspection documentation recorded by the ESC Lead.

8-01.5 Payment

Section 8-01.5 is supplemented with the following:

"Erosion Control and Water Pollution Prevention", per lump sum, shall also include all Work and materials necessary to develop and implement the SWPPP. All erosion control measures are included in "Erosion Control and Water Pollution Prevention", per lump sum, except as otherwise noted in the Contract Documents.

Provided to Builders Exchange of WA, Inc. For usage Conditions Agreement see www.bxwa.com - Always Verify Scal

8-02 Roadside Restoration

8-02.3 Construction Requirements

8-02.3(4) Topsoil

8-02.3(4)A Topsoil Type A

Section 8-02.3(4)A is supplemented with the following:

Topsoil Type A shall be a commercially available three-way mix.

8-04 Curbs, Gutters, and Spillways

8-04.3 Construction Requirements

8-04.3(1) Cement Concrete Curbs, Gutters, and Spillways

Section 8-04.3(1) is supplemented with the following:

Cement Conc. Valley Gutter shall be constructed in accordance with the details shown in the Plans.

Cement concrete banding shall be constructed where shown and as detailed in the Plans.

8-04.4 Measurement

Section 8-04.4 is supplemented with the following:

Cement Conc. Traffic Curb and Gutter – 4 In. Height will be measured by the linear foot along the line of the completed curb.

Cement Conc. Valley Gutter shall be measured by the linear foot of valley gutter installed.

Cement Conc. Banding will be measured by the linear foot along the line of the completed banding.

8-04.5 Payment

Section 8-04.5 is supplemented with the following:

"Cement Conc. Traffic Curb and Gutter – 4 In. Height", per linear foot.
The unit Contract price per linear foot for "Cement Conc. Traffic Curb and Gutter – 4 In. Height" shall be full compensation for all labor, equipment, materials, forms, and incidentals necessary to perform the Work.

"Cement Conc. Valley Gutter", per linear foot.
The unit Contract price per linear foot for "Cement Conc. Valley Gutter" shall be full compensation for all labor, equipment, materials, forms, and incidentals necessary to perform the Work.

"Cement Conc. Banding", per linear foot.

Provided to Builders Exchange of WA, Inc. For usage Conditions Agreement see www.bxwa.com - Always Verify Scal

The unit Contract price per linear foot for "Cement Conc. Banding" shall be full compensation for all labor, equipment, materials, forms, and incidentals necessary to perform the Work.

8-14 Cement Concrete Sidewalks

8-14.3 Construction Requirements

Section 8-14.3 is supplemented with the following:

(October 3, 2022 WSDOT GSP)

The Contractor shall request a pre-construction meeting with the Engineer to be held two to five working days before any work can start on cement concrete sidewalks, curb ramps or other pedestrian access routes to discuss construction requirements. Those attending shall include:

1. The Contractor and subcontractor in charge of constructing forms, and placing, and finishing the cement concrete.

2. Engineer (or representative) and Project Inspectors for the cement concrete sidewalk, curb ramp or pedestrian access route Work.

Items to be discussed in this meeting shall include, at a minimum, the following:

1. Slopes shown on the Plans.

2. Inspection

3. Traffic control

4. Pedestrian control, access routes and delineation

5. Accommodating utilities

6. Form work

7. Installation of detectable warning surfaces

8. Contractor ADA survey and ADA Feature as-built requirements

9. Cold Weather Protection

(January 7, 2019 WSDOT GSP)

Timing Restrictions

Curb ramps shall be constructed on one leg of the intersection at a time. The curb ramps shall be completed and open to traffic within five calendar days before construction can begin on another leg of the intersection unless otherwise allowed by the Engineer.

Unless otherwise allowed by the Engineer, the five calendar day time restriction begins when an existing curb ramp for the quadrant or traffic island/median is closed to pedestrian use

Provided to Builders Exchange of WA, Inc. For usage Conditions Agreement see www.bxwa.com - Always Verify Scal

and ends when the quadrant or traffic island/median is fully functional and open for pedestrian access.

(January 7, 2019 WSDOT GSP)

Layout and Conformance to Grades

Using the information provided in the Contract documents, the Contractor shall lay out, grade, and form each new curb ramp, sidewalk, and curb and gutter.

8-14.3(3) Placing and Finishing Concrete

Section 8-14.3(3) is supplemented with the following:

Sidewalk and curb and gutter cannot be poured monolithically. An expansion joint will be required when concrete sidewalk is surrounded by other hard surfaces (for example driveways) or as directed by the Engineer.

8-14.3(6) Documentation

Section 8-14.3(6) is added as follows:

The Contractor shall perform as-constructed ADA compliance field checks for all new sidewalk and curb ramps constructed on the project and provide documentation to the Engineer for approval, certifying that all slopes along sidewalks and ramps meet the slope criteria set forth in the Plans and the PROWAG. The Contractor shall verify the as-constructed slopes of the sidewalks and curb ramps with readings of a 4-foot long "smart level" placed along all fall lines of sidewalks and curb ramps, and include the readings in the provided documentation.

8-14.4 Measurement

Section 8-14.4 is supplemented with the following:

Cement concrete curb ramps will be measured by the square yard of completed curb ramp installed includes the installation of the detectable warning surface.

8-14.5 Payment

Section 8-14.5 is supplemented with the following:

"Cement Conc. Curb Ramp Type _____", per square yard.
The unit Contract price per square yard for "Cement Conc. Curb Ramp Type _____" shall be full pay for installing the curb ramp as specified, including the installation of the detectable warning surface.

Payment for "Cement Conc. Sidewalk", and "Cement Conc. Curb Ramp Type ___" as specified, shall be contingent upon finished concrete meeting the requirements as detailed in the Plans, including, but not limited to all slopes, lines, grades, widths, and lengths in compliance with the Contract documents. All Work not in compliance with the Contract documents shall be considered defective and shall be removed and replaced solely at the Contractor's expense. At the discretion of the Engineer, any damage done to existing sidewalk or curb ramps noted to remain as a result of the Contractor's Work, shall be repaired to the satisfaction of the Engineer, at no additional expense to the Contracting Agency.

Payment for documentation requirements as specified shall be considered as incidental to the "Cement Conc. Sidewalk" and "Cement Conc. Curb Ramp Type ___" Bid items.

Provided to Builders Exchange of WA, Inc. For usage Conditions Agreement see www.bxwa.com - Always Verify Scal

8-19 Vacant

Section 8-19, including title, is replaced with the following:

8-19 Concrete Unit Pavers

8-19.1 Description

This Work consists of constructing concrete unit pavers in accordance with details shown in the Plans and these Specifications, and in conformity to the lines and grades shown in the Plans or as established by the Engineer.

8-19.2 Materials

Materials shall meet the requirements of the following Sections:

Concrete Unit Pavers	9-38.1
Bedding Sand	9-38.2
Joint Sand	9-38.3

8-19.3 Construction Requirements

8-19.3(1) General

Comply with the following Specifications:

American Society for Testing and Materials (ASTM), Latest Edition

Interlocking Concrete Pavement Institute (ICPI), Latest Edition

The Contractor shall comply with environmental agencies, building codes, and other local requirements that are more stringent than above.

Before proceeding with any Work, the Contractor shall inspect the site, carefully check all grades, and verify all dimensions and conditions affecting the Work. The Contractor shall establish all necessary elevations and grade stakes to provide a smooth and even surface. The Contractor shall verify the accuracy of Work layout and grading. The Contractor shall immediately notify the Engineer of any discrepancy on line and level. Extra Work arising from failure to do so shall be completed at the Contractor's expense. The Engineer reserves the right to make minor changes in line or level to suit existing or developed conditions at no additional cost to the Contracting Agency.

The Contractor shall obtain each material from a single source and maintain a high degree of consistency in workmanship throughout the project.

The Contractor shall protect new Work and work-in-progress from vandalism and damage that might be incurred by construction traffic, equipment, property, and persons.

8-19.3(2) Submittals

As part of Contractor approval to perform concrete unit paver Work, the paver Contractor or Subcontractor shall submit a list of minimum five (5) completed projects of similar size

Provided to Builders Exchange of WA, Inc. For usage Conditions Agreement see www.bxwa.com - Always Verify Scal

and complexity for Local or State agencies including the date of the installation, a contact name and phone number for each project. Agency satisfaction of Work for the submitted projects will be taken into account in the consideration of Subcontractor approval.

Prior to placing pavers, the Contractor shall submit for review and acceptance the following product data and manufacturer's instructions for installation:

- Concrete unit paver with manufacturer Specifications, and operations and maintenance manuals. The Contractor shall provide supplemental operations and maintenance input.
- Sieve analysis for crushed surfacing top course, bedding sand, and joint sand.
- Method of performing the Work and equipment to be used for the paver installation

The following information shall be provided to the Engineer a minimum of two (2) working days in advance of construction. The Contractor shall submit for review and acceptability full size concrete unit paver sample(s) in the shape and color of each type specified.

The Contractor shall also provide a minimum four (4) foot square concrete unit paver area mock-up for review and acceptance by the Engineer prior to construction, for each type of paver application and transition between paver colors. The paver area mock-up(s) shall be constructed using equipment, tools, and methods proposed for this project. The paver area mock-up(s) shall be maintained on-site in a secure location and shall not be demolished or removed from the site until all concrete paver Work has been completed and accepted. Paver area mock-ups shall be removed and disposed of when no longer needed.

The Contractor shall affix permanent identification to each concrete unit paver area mock-up, including an assigned number, the date of mock-up construction, and name of company and personnel completing the mock-up.

The mock-up area may remain as part of the installed Work at the end of the project provided that it remains in good condition and meets all the conditions of these Specifications.

Concrete unit paver area mock-ups shall be provided for the Engineer's review a minimum of two (2) working days in advance of paver construction.

8-19.3(3) Delivery, Storage and Handling

The pavers shall be delivered and stored in accordance with the manufacturer or supplier's written recommendations.

The Contractor shall also deliver one (1) extra pallet of pavers of each shape, size, and color to the Contracting Agency at a facility location to be determined. Notify Engineer at least two (2) working days prior to delivery.

Joint sand shall be stored as to prevent exposure to rain, snow, and wind. Sand shall also be protected against soilage or contamination from earth and other materials.

Provided to Builders Exchange of WA, Inc. For usage Conditions Agreement see www.bxwa.com - Always Verify Scal

8-19.3(4) Subgrade Preparation

The Subgrade preparation shall extend to the rear face of concrete curb or 6" beyond the edge limits of outer paver.

All curbing, and electrical conduits shall be completed prior to Subgrade preparation. Prior to placing concrete unit paver underlying materials, the Subgrade shall be compacted, uniform, and even. Organic materials, roots, debris, rocks, and water-saturated soils in Subgrade shall be removed and disposed of and replace with clean compacted backfill material. The Subgrade shall be compacted to a maximum 95 percent of maximum density as specified in Section 2-03.3(14)D. Construction of paver underlying materials shall not proceed until the Subgrade is inspected by the Engineer to determine acceptability.

8-19.3(5) Base

CSTC shall be placed over prepared Subgrade, and compacted to the thickness of material indicated in the Plans. Compaction shall be to 95 percent density per Section 2-03.3(14)D. Moisten, spread and screed the Bedding Sand to the thickness of material indicated in the Plans.

Special attention must be given to achieve required compaction standards adjacent to edge restraints, tree grates, sidewalks, and concrete curbs.

8-19.3(6) Paver Installation

The pavers shall be installed in a Herringbone pattern.

The top of edge restraints and other Structures shall be adjusted to grade prior to placing pavers.

The Contractor shall not install underlying paver materials or pavers during heavy rain, freezing temperature, or snowfall. The Contractor shall not install underlying paver materials or pavers on frozen Subgrade or snowfall.

Pavers shall be placed in the pattern as shown in the Plans for Engineer acceptance. Layout pattern and create markings for directional references of joints and string-lines shall be established prior to paver placement. Pavers shall be aligned to maintain correct lines and patterns.

The Contractor shall field verify and coordinate the layout of concrete pavers to minimize cutting of pavers. The Engineer shall be notified of any discrepancies prior to beginning paver installation. The Contractor shall receive Engineer approval prior to the start of concrete paver placement.

The Contractor shall ensure that pavers are free of foreign materials before installation. During placement, pavers shall be mixed from several pallets as they are installed to produce a uniform blend of color.

Gaps at the unit pavement edges shall be filled with standard edge pavers or pavers cut to fit. Cutting shall be performed with a motor-driven masonry saw to provide clean and unchipped edges. Hammer cutting or block splitting is not acceptable. No pieces shall

Provided to Builders Exchange of WA, Inc. For usage Conditions Agreement see www.bxwa.com - Always Verify Scal

be smaller than one-fourth (1/4) of a full paver unless otherwise accepted by Engineer prior to beginning construction.

After concrete unit paver installation, distribute paver jointing sand evenly across the surface. Sweep the paver jointing sand into joints until full. Compact as necessary to minimize voids in sanded joints. Sweep additional sand into joints as necessary. Sweep away with a broom or use a leaf blower to remove excess sand.

Unit paver paving shall be protected from damage until final acceptance of Work. Vehicular and pedestrian traffic on concrete unit pavers shall not be allowed until the paver installations are accepted by the Engineer and approved for vehicular and pedestrian traffic. Sweep paver pavement and wash free of stains, discoloration, dirt and other foreign material just prior to final acceptance.

8-19.3(7) Acceptance

The pavement grade and surface elevations in the finished condition shall not deviate more than 3/8-inch from specified elevations. Bond or joint lines shall not vary 1/2-inch over fifty (50) feet from taut string lines. The surface elevation of the pavers shall be 1/8-inch above adjacent curb.

Broken or defective pavers that are loose, chipped, broken, stained, or otherwise damaged as determined by the Engineer shall be removed and replaced. New pavers shall be provided to match adjoining units and install in the same manner as original pavers, with same joint treatment to eliminate evidence of replacement.

8-19.4 Measurement

Concrete unit pavers will be measured by the square foot, finished in place.

Bedding sand and joint sand will not be measured, and will be considered incidental to the concrete unit pavers.

8-19.5 Payment

Payment will be made for each of the following Bid items that are included in the Proposal:

"Concrete Unit Pavers", per square foot.

The unit Contract price for "Concrete Unit Pavers" shall be full pay for all Work to furnish and install concrete unit pavers of the type specified, in the pattern specified, including all required submittals, and all Work to furnish and install bedding sand and joint sand.

8-20 Illumination, Traffic Signal Systems, Intelligent Transportation Systems, and Electrical

8-20.1 Description

Section 8-20.1 is supplemented with the following:

The Work involves the procurement and installation of the following equipment:

- Overhead string lighting system within the sunshade canopy system
- Service cabinet and foundation at the northeast corner of the park

Provided to Builders Exchange of WA, Inc. For usage Conditions Agreement see www.bxwa.com - Always Verify Scal

- Recessed lighting system in the concrete seat walls
- Outlets at the gazebo structure
- Recessed outlet at the southern raised seat wall
- All associated conduits, junction boxes, and wiring

8-20.2 Materials

Materials shall meet the requirements of the following Sections:

Junction Boxes, Cable Vaults, and Pull Boxes	9-29.2 Special Provisions
Overhead String Lighting and Outlets	9-29.5 Special Provisions
Service Cabinets	9-29.24 Special Provisions

8-20.5 Payment

Section 8-20.5 is supplemented with the following:

The lump sum Contract price for "Illumination and Electrical System" shall include all costs associated with installing the overhead string lights, service cabinet and foundation, recessed lighting system, and recessed outlets, in accordance with the manufacturer's recommendations and all applicable details and Special Provisions of the Contract Documents and the Standard Specifications. Work includes but is not limited to any required excavation and backfill, wiring and conduit, junction boxes, splicing, electrical grounding, concrete foundations, as-builts, and all necessary anchors and fasteners in accordance with the details and Special Provisions of the Contract Documents and all applicable Standard Specifications.

8-21 Permanent Signing

8-21.2 Materials

Section 8-21.2 is supplemented with the following:

Wayfinding Sign	9-37.1 Special Provisions and Appendix B
Historic Board Sign	9-37.2 Special Provisions and Appendix B

8-21.3 Construction Requirements

Section 8-21.3 is supplemented with the following:

The Contractor shall provide a final wayfinding sign specification sheets from the manufacturer for review and verification of the sign layout by the Engineer prior to construction.

The Contractor shall install wayfinding signs of the type specified in the Contract Plans according to manufacturers' recommendations. Wayfinding signs shall be installed where indicated in the Plans. The Contractor shall provide at least one (1) working day advance notice to the Engineer, prior to placement of proposed wayfinding sign locations for verification.

Provided to Builders Exchange of WA, Inc. For usage Conditions Agreement see www.bxwa.com - Always Verify Scal

All wayfinding signs shall be laid out in the field and approved prior to installation. The Contractor shall coordinate with site Work and other appropriate Sections of the Specifications to maintain proper provisions of the Work specified.

8-21.4 Measurement

Section 8-21.4 is supplemented with the following:

Wayfinding sign will be measured per each unit permanently installed and accepted in place.

Historic Board Sign will be measured per each unit permanently installed and accepted in place.

8-21.5 Payment

Section 8-21.5 is supplemented with the following:

"Wayfinding Sign", per each.
The unit Contract price per each for "Wayfinding Sign" shall be full pay for all labor, equipment, and materials necessary for furnishing and installing wayfinding signs, hardware, and footings, and all required submittals.

"Historic Board Sign", per each.
The unit Contract price per each for "Historic Board Sign" shall be full pay for all labor, equipment, and materials necessary for furnishing and installing historic board signs, hardware, and footings, and all required submittals.

8-26 Vacant

Section 8-26, including title, is replaced with the following:

8-26 Bench Swing

8-26.1 Description

This Work consists of providing labor, equipment, supplies, material, transportation, handling, and storage, and performing all operations in connection with furnishing and installing the bench swing, footings and anchors in accordance with the Plans, and these Specifications.

8-26.2 Materials

Bench Swing	9-37.3 Special Provisions and Appendix C

8-26.3 Construction Requirements

The Contractor shall install the bench swing of the type specified in the Contract Plans according to manufacturers' recommendations. The bench swing shall be installed where indicated in the Plans. The Contractor shall provide at least one (1) working day advance notice to the Engineer, prior to placement of proposed bench swing location for verification.

Provided to Builders Exchange of WA, Inc. For usage Conditions Agreement see www.bxwa.com - Always Verify Scal

The bench swing shall be laid out in the field and approved prior to installation. The Contractor shall coordinate with site Work and other appropriate Sections of the Specifications to maintain proper provisions of the Work specified.

8-26.4 Measurement

Bench swing will be measured per each unit permanently installed and accepted in place.

8-26.5 Payment

"Bench Swing", per each.

The unit Contract price per each for "Bench Swing" shall be full pay for all labor, equipment, and materials necessary for furnishing and installing bench swings, hardware, and footings, and all required submittals.

8-27 Vacant

Section 8-27, including title, is replaced with the following:

8-27 Water Fountain

8-27.1 Description

This Work consists of providing labor, equipment, supplies, material, transportation, handling, and storage, and performing all operations in connection with furnishing and installing the water fountain and required utility connections, in accordance with the Plans, and these Specifications.

8-27.2 Materials

Materials shall meet the requirements of the following sections:

Water Fountain	9-37.4 Special Provisions

8-27.3 Construction Requirements

The Contractor shall install the bench swing of the type specified in the Contract Plans according to manufacturers' recommendations. The bench swing shall be installed where indicated in the Plans. The Contractor shall provide at least one (1) working day advance notice to the Engineer, prior to placement of proposed bench swing location for verification.

The bench swing shall be laid out in the field and approved prior to installation. The Contractor shall coordinate with site Work and other appropriate Sections of the Specifications to maintain proper provisions of the Work specified.

8-27.4 Measurement

Water fountain will be measured per each unit permanently installed and accepted in place.

Provided to Builders Exchange of WA, Inc. For usage Conditions Agreement see www.bxwa.com - Always Verify Scal

8-27.5 Payment

"Water Fountain", per each.

The unit Contract price per each for "Water Fountain" shall be full pay for all labor, equipment, and materials necessary for furnishing and installing the water fountain, including the fountain, hardware, connection to the stormwater system, connection to the water meter, and all required submittals.

8-28 Vacant

Section 8-28, including title, is replaced with the following:

8-28 Sunshade Canopy System

8-28.1 Description

This Work consists of providing labor, equipment, supplies, material, transportation, handling, and storage, and performing all operations in connection with furnishing and installing sunshade canopies, footings and anchors in accordance with the Plans, and these Specifications.

8-28.2 Materials

Materials shall meet the requirements of the following sections:

Sunshade Canopy System	9-37.5 Special Provisions and Appendix E

8-28.3 Construction Requirements

The Contractor shall install the sunshade canopy system as specified in the Contract Plans, Appendix E, and according to manufacturers' recommendations. The sunshade canopy system shall be installed where indicated in the Plans. The Contractor shall provide at least one (1) working day advance notice to the Engineer, prior to placement of proposed sunshade canopy system for verification.

The sunshade canopy system shall be laid out in the field and approved prior to installation. The Contractor shall coordinate with site Work and other appropriate Sections of the Specifications to maintain proper provisions of the Work specified.

8-28.4 Measurement

Sunshade Canopy System will be measured per lump sum.

8-28.5 Payment

"Sunshade Canopy System", per lump sum.

The unit Contract price per each for "Sunshade Canopy System" shall be full pay for all labor, equipment, and materials necessary for furnishing and installing the sunshade canopy system, including the foundations, poles, shades, hardware, and all required submittals.

Provided to Builders Exchange of WA, Inc. For usage Conditions Agreement see www.bxwa.com - Always Verify Scal

8-29 Vacant

Section 8-28, including title, is replaced with the following:

8-29 Site Furniture

8-29.1 Description

This Work consists of providing labor, equipment, supplies, material, transportation, handling, and storage, and performing all operations in connection with furnishing and installing tables and chairs in accordance with the Plans, and these Specifications.

8-29.2 Materials

Materials shall meet the requirements of the following sections:

Table	9-37.6 Special Provisions
Chair	9-37.6 Special Provisions

8-29.3 Construction Requirements

The Contractor shall furnish and install the tables and chairs as specified in the Contract Plans, these Specifications, and according to manufacturers' recommendations.

8-29.4 Measurement

Tables will be measured per each.

Chairs will be measured per each.

8-29.5 Payment

"Table", per each.
The unit Contract price per each for "Table" shall be full pay for all labor, equipment, and materials necessary for furnishing and installing the tables in accordance with the Plans, and these Specifications.

"Chair", per each.
The unit Contract price per each for "Chair" shall be full pay for all labor, equipment, and materials necessary for furnishing and installing the chair in accordance with the Plans, and these Specifications.

Section 8-30 is added as follows:

8-30 Raised Seat Walls

8-30.1 Description

This Work consists of all Work required to furnish and install raised seat walls as shown in the Plans, and these Specifications.

8-30.2 Materials

Materials shall conform to the requirement of the following sections:

Provided to Builders Exchange of WA, Inc. For usage Conditions Agreement see www.bxwa.com - Always Verify Scal

Cement Concrete Class 3000	6-02.3(1) Standard Specifications
Portland Cement	9-01 Standard Specifications
Aggregate for Portland Cement Concrete	9-03.1 Standard Specifications
Steel Reinforcing Bars	9-07 Standard Specifications
Concrete Curing Materials and Admixtures	9-23 Standard Specifications
Water	9-25 Standard Specifications

8-30.3 Construction Requirements

8-30.3(1) Submittals

The Contractor shall submit the following information to the Engineer at least 14 days prior to beginning construction of the planters:

1. The concrete mix design with compressive strength test results.
2. All formwork plans for raised planter walls to the Engineer for approval.
3. Method and Equipment used to finish and cure the face.
4. Documentation of the experience of the concrete installers and finishers: Minimum of 5 years experience with cast in place concrete construction. Installers and finishers must submit evidence of a successful installation history with comparable materials and designs specified.

The Contractor shall not begin construction of the planter walls until receiving the Engineer's approval of the above submittals.

8-30.3(2) Excavation and Foundation Preparation

Excavation shall conform to Section 3-03, and to the limits and construction stages shown in the Plans.

8-30.3(3) Cast-In-Place Concrete Construction

Cast-in-place concrete for concrete planter walls shall be formed, reinforced, cast, cured, and finishes in accordance with Section 6-02, and the details shown in the Plans and Standard Plans. Raised seat wall concrete shall be Class A3 3000 PSI compressive strength at 28-days with maximum aggregate size of 1.2 inches.

8-30.3(4) Production of Concrete

Ready Mix: Ready-mixed concrete shall conform to ASTM C94 except as otherwise specified.

Concrete shall be mixed, conveyed and placed in accordance with ACI 304.

8-30.3(5) Preparation for Placing

Formwork shall be complete and mortar tight. Temporary access ramps and walkways, as necessary, shall be constructed to allow safe and expeditious access for concrete placement and workers. Standing water, loose particles, debris and foreign matter shall be removed. Reinforcement shall be secured in place; joints, anchors and other embedded items shall be positioned. All equipment needed to place and consolidate the concrete shall be at the placement site and in good operating condition. Spare vibrators shall be available. The entire preparation shall be accepted by the Engineer in writing prior to placement.

Provided to Builders Exchange of WA, Inc. For usage Conditions Agreement see www.bxwa.com - Always Verify Scal

8-30.3(6) Placing

Concrete placement will not be permitted when weather conditions prevent proper placement and consolidation. In hot weather (above 85 degrees F), concrete shall be placed in accordance with ACI 305R. In cold weather (below 40 degrees F for more than three consecutive days), concrete shall be placed in accordance with ACI 306R. Concrete shall be placed in accordance with ACI 304. Concrete shall be conveyed from the mixer to the forms as rapidly as practicable, by methods which prevent segregation or loss of ingredients. Concrete shall be in place within 15 minutes after discharge from the mixer. Concrete shall be deposited as close as possible to its final position in the forms. The placement shall be carried on at such a rate that the formation of cold joints will be prevented. Each layer of concrete (18 inches maximum thickness) shall be consolidated by internal vibrating equipment. Vibration shall be systematically accomplished by inserting the vibrator through the fresh concrete into the layer below at a uniform spacing over the entire area of placement. The distance between insertions shall be approximately 1-1/2 times the radius of action of the vibrator and overlay the adjacent, just vibrated area by a few inches. The vibrator shall penetrate rapidly to the bottom of the layer and at least 6 inches into the layer below if such exists. The vibrator shall be held stationary until the concrete is consolidated (normally 4 to 6 seconds but some mixes may require more time) and then withdrawn slowly.

8-30.3(7) Finishing

General: No finishing or repairs will be done when either the concrete or the ambient temperature is below 50 degrees F.

Finishing Horizontal Surfaces: Tops of walls and similar unformed surfaces occurring adjacent to formed surfaces shall be struck smooth after concrete is placed and shall be floated to a texture reasonably consistent with that of the adjacent formed surfaces. Final treatment of formed surfaces shall continue uniformly across the unformed surfaces.

Finishing Formed Surfaces: Beginning no more than 24 hours after form removal, all fins and loose materials shall be removed and surface defects including tie holes shall be filled. All honeycomb and other defects shall be repaired. All unsound concrete shall be removed from areas to be repaired. Surface defects greater than ½ inch in diameter and holes left by removal of tie rods in all surfaces not to receive additional concrete shall be reamed or chipped and filed with repair mortar. Areas to be repaired shall be dampened, brush-coated with a bonding grout and filled with Portland cement repair mortar. The cement used in mortar or concrete for repairs to all surfaces permanently exposed to view shall be such that the final color when cured will be the same as adjacent concrete.

Provide ½-inch troweled radius on all exposed corners.

Provide joint sealer on all exposed joints.

8-30.3(8) Curing and Protection:

Curing shall be in accordance with ACI 308. Beginning immediately after placement, and continuing for at least 7 days all concrete shall be cured and protected from premature drying, extremes in temperature, rapid temperature change, freezing, mechanical damage and exposure to rain or flowing water. All materials and equipment needed for adequate curing and protection shall be available and at the site of the placement prior to start of concrete

Provided to Builders Exchange of WA, Inc. For usage Conditions Agreement see www.bxwa.com - Always Verify Scal

placement. Preservation of moisture for concrete surfaces not in contact with forms shall be accomplished by one of the following methods:

a. Application of absorptive mats or fabrics kept continuously wet.
b. Application of impervious sheet materials.
c. Application of membrane forming curing compound, applied in accordance with manufacturer's instructions.

The preservation of moisture for concrete surfaces placed against wooden forms shall be accomplished by keeping the forms continuously wet for 7 days. If forms are removed prior to 7 days other curing methods shall be used for the balance of the 7-day period.

Form Removal: Forms may be removed when concrete has reached 80 percent of the required compressive strength but no less than 5 days.

8-30.4 Measurement

Raised seat walls shall be measured per linear foot of wall installed and accepted in place.

8-30.5 Payment

Payment will be made for the following Bid item when included in the Proposal:

"Raised Seat Wall", per linear foot.
The unit Contract price per linear foot for "Raised Seat Wall" shall include all costs for the Work and materials required to furnish and install the completed wall, including required excavation, gravel, and reinforcement.

END OF DIVISION 8

Provided to Builders Exchange of WA, Inc. For usage Conditions Agreement see www.bxwa.com - Always Verify Scal

Division 9
Materials

9-29 Illumination, Signal, Electrical

9-29.2 Junction Boxes, Cable Vaults, and Pull Boxes

Section 9-29.2 is supplemented with the following:

(September 3, 2019 WSDOT GSP)

Slip-Resistant Surfacing for Junction Boxes, Cable Vaults, and Pull Boxes

Where slip-resistant junction boxes, cable vaults, or pull boxes are required, each box or vault shall have slip-resistant surfacing material applied to the steel lid and frame of the box or vault. Where the exposed portion of the frame is ½ inch wide or less, slip-resistant surfacing material may be omitted from that portion of the frame.

Slip-resistant surfacing material shall be identified with a permanent marking on the underside of each box or vault lid where it is applied. The permanent marking shall be formed with a mild steel weld bead, with a line thickness of at least 1/8 inch. The marking shall include a two character identification code for the type of material used and the year of manufacture or application. The following materials are approved for application as slip-resistant material, and shall use the associated identification codes:

1. Harsco Industrial IKG, Mebac #1 - Steel: **M1**
2. W. S. Molnar Co., SlipNOT Grade 3 – Coarse: **S3**
3. Thermion, SafTrax TH604 Grade #1 – Coarse: **T1**

9-29.5 Vacant

Section 9-29.5 including title, is deleted and replaced with the following:

9-29.5 Overhead String Lighting, Recessed Lighting, and Outlets

Overhead string lighting to be installed under the sunshade canopy system shall be as specified below, or an approved equal.

A5-ZOZO-STN-12”-27K-GSF-WET by Aluz

Recessed outlet to be installed in the southern raised seat wall shall be as specific below, or an approved equal.

QB-1-SP by Lew Electric Fittings Company

Recessed lighting to be installed within the raised seat walls shall be as specified below, or an approved equal.

RD2-LS1252-09D 827 DY 09_BL by Reed

Provided to Builders Exchange of WA, Inc. For usage Conditions Agreement see www.bxwa.com - Always Verify Scal

9-29.24 Service Cabinets

Item 3 of Section 9-29.24 is supplemented with the following:

(February 6, 2023 WSDOT GSP)
Removable Door Handles

Service cabinet doors shall be provided with a $\frac{5}{8}$-inch hex key socket in place of a handle for customer sections of the service cabinet. The hex socket and locking cam shall rotate on a ½-inch minimum diameter shaft. The socket assembly shall either be:

1. Flush with the face of the door, such that no portion of the socket assembly extends beyond the face of the door, and it cannot be rotated by locking pliers or a similar gripping device; or

2. Protected by a ring of 6061-T6 aluminum tubing. The tubing shall have a minimum wall thickness of 0.125 inches. The ring shall extend at least 0.15 inches beyond the end of the socket and shall provide no more than 0.07 inches of clearance from the socket such that the socket cannot be gripped by pliers or a similar gripping device. The ring shall be attached to the door using three ½-inch fillet welds, each ¾-inch long, evenly spaced around the outer circumference of the tube.

One hex key door handle shall be provided with each cabinet.

9-37 Vacant

Section 9-37, including title, is replaced with the following:

9-37 Site Furnishings

9-37.1 Wayfinding Signs

The wayfinding sign shall be manufactured by Meyer Sign per details included in Appendix B.

9-37.2 Historic Board Sign

The historic board sign shall be manufactured by Meyer Sign per details included in Appendix B.

9-37.3 Bench Swing

The bench swing shall be Thomas Steele, Product: LABS-6-RPC-IG-P, per details included in Appendix C. Pergola and bench shall be Recycled Plastic Cedar, and the remaining elements shall be power coated black.

Provided to Builders Exchange of WA, Inc. For usage Conditions Agreement see www.bxwa.com - Always Verify Scal

9-37.4 Water Fountain

The water fountain shall be Barco, Model 05WB4030, Black color.

9-37.5 Sunshade Canopy System

The sunshade canopy shall be Custom Canopies, Model TSB-33X11X8-10, per details included in Appendix E. Colors of the canopies shall be Aquatic Blue (quantity 2), Orange (quantity 2), and Bright Green (quantity 2). The poles shall be powder coated black.

9-37.6 Site Furniture

The tables shall be Fermob, Bistro Table 28 x 28 In., Liquorice color.

The chairs shall be Fermob, Bistro Metal Chair, Liquorice color.

9-38 Vacant

Section 9-38, including title, is replaced with the following:

9-38 Concrete Unit Pavers

9-38.1 Concrete Unit Pavers

Concrete unit pavers shall conform to ASTM C902, *Standard Specification for Solid Concrete Interlocking Paver Units.*

The concrete unit pavers shall be Mutual Materials, Holland Paver, Rustic Blend Color. The paver shall be 2-3/8 inches thick x 3-15/16 inches wide x 7-7/8 inches long. The block shall be interlocking with no gaps or joints larger than 1/16 inch.

9-38.2 Bedding Sand

Bedding Sand shall meet the following requirements for grading and quality when placed in hauling vehicles for delivery to the project site, or during manufacture and placement into a temporary stockpile. The exact point of acceptance will be determined by the Engineer.

ASTM C33	
Sieve Size	**Percent Passing**
3/8”	100
No. 4	95 - 100
No. 8	80 - 100
No. 16	50 - 85
No. 30	25 - 60
No. 50	5 - 30
No. 100	0 - 10
No. 200	0 - 1

Provided to Builders Exchange of WA, Inc. For usage Conditions Agreement see www.bxwa.com - Always Verify Scal

Bedding Sand shall be washed, clean, non-plastic, free from deleterious or foreign matter, symmetrically shaped, natural or manufactured from crushed rock. Limestone screenings, stone dust, or sand material that does not conform to the grading requirements of ASTM C33, *Standard Specification for Concrete Aggregates*, shall not be used. Mason sand or sand conforming to ASTM C144, Standard Specification for Aggregate for Masonry Mortar, shall not be used. Sand as hard as practically available shall be used where concrete pavers are subject to vehicular traffic. Sieving shall be performed in accordance with ASTM C136, *Standard Test Method for Sieve Analysis of Fine and Coarse Aggregates*.

9-38.3 Joint Sand

Joint Sand shall meet the following requirements for grading and quality when placed in hauling vehicles for delivery to the project site, or during manufacture and placement into a temporary stockpile. The exact point of acceptance will be determined by the Engineer.

ASTM C144 – Natural Sand		ASTM C144 – Manufactured	
Sieve Size	**Percent Passing**	**Sieve Size**	**Percent Passing**
No. 4	100	No. 4	100
No. 8	95 - 100	No. 8	95 - 100
No. 16	70 - 100	No. 16	70 - 100
No. 30	40 - 75	No. 30	40 - 100
No. 50	10 - 35	No. 50	20 - 40
No. 100	2 - 15	No. 100	10 - 25
No. 200	0 - 1	No. 200	0 - 5

Joint Sand shall be washed, clean, non-plastic, free from deleterious or foreign matter, symmetrically shaped, natural or manufactured from crushed rock. Sand as hard as practically available shall be used where concrete pavers are subject to vehicular traffic. Sieving shall be performed in accordance with ASTM C136, *Standard Test Method for Sieve Analysis of Fine and Coarse Aggregates*.

END OF DIVISION 9

Provided to Builders Exchange of WA, Inc. For usage Conditions Agreement see www.bxwa.com - Always Verify Scal

Appendices
(January 2, 2012)

The following appendices are attached and made a part of this contract:

***

APPENDIX A:
Prevailing Wage Rates

APPENDIX B:
Wayfinding and Historic Board Sign Details

APPENDIX C:
Pergola Bench Swing Details

APPENDIX D:
Water Fountain Details

APPENDIX E:
Sunshade Canopy System Details

APPENDIX F:
Site Clean up Report

APPENDIX G:
Illumination Details

APPENDIX H:
Standard Plans

***

Standard Plans
(November 4, 2024 WSDOT GSP)

The Washington State Department of Transportation *Standard Plans* M21-01, published September 2024, is made a part of this Contract with the following revisions:

A-10.30
RISER RING detail (Including SECTION view and RISER RING DIMENSIONS table): The RISER RING detail is deleted from the plan.

INSTALLATION detail, SECTION A: The “1/4”” callout is revised to read “+/- 1/4" (SEE CONTRACT ~ Note: The + 1/4" installation is shown in the Section A view)”

A-40.20
Sheet 1, NOTES 1, 2, 3, and 4 are replaced with the following:

Provided to Builders Exchange of WA, Inc. For usage Conditions Agreement see www.bxwa.com - Always Verify Scal

1. Use the ½ inch joint details for bridges with expansion length less than 100 feet and for bridges with L type abutments. Use the 1 inch joint details for other applications.

2. Use detail 5, 6, 7 on steel trusses and timber bridges with concrete bridge deck panels.

3. For details 1, 2, 3, and 4, the item "HMA Joint Seal at Bridge End" shall be used for payment. For details 5 and 6, the item "HMA Joint Seal at Bridge Deck Panel Joint" shall be used for payment. For detail 7, the item "Clean and Seal Bridge Deck Panel Joint" shall be used for payment.

Sheet 2, Detail 8 reference to "6-09.3(6)" is revised to read "6-21.3(7)".

A-50.40
Sheet 1, Plan View: The callout "BEAM GUARDRAIL TYPE 31 TRANSITION SECTION TYPE 21 OR TYPE 24 (SEE STANDARD PLAN C-25.20 OR C-25.30)" is revised to read "BEAM GUARDRAIL TYPE 31 TRANSITION SECTION TYPE 21, 24, OR 25 (SEE STANDARD PLAN C-25.20, C-25.30, OR C-25.32)"

A-60.40
Note 2 reference to "6-09.3(6)" is revised to read "6-21.3(7)".

B-90.40
Valve Detail – DELETED

C-23.70
Sheet 2, ANCHOR BRACKET ASSEMBLY DETAIL, dimension, "R. 5/16" is revised to read; R. 15/16"
ANCHOR PLATE DETAIL, weld callout (fillet), 1/4" is revised to read; 3/16"

C-60.20
Sheet 1, Plan view, callout – "1/2" (IN) DIAMETER X 6 1/2" (IN) LONG ANCHOR BOLT ~ PER STD. SPEC. SECT. 9-06.5(4) (TYPICAL) (SEE NOTE 7)" is revised to read: "5/8" DIAMETER x 6 1/2" (IN) LONG ANCHOR BOLT ~ PER STD. SPEC. SECT. 9-06.5(4) (TYPICAL) (SEE NOTE 7)"

C-81.15
Sheet 1, General Notes, Add Note 7, to read;"7. The concrete class for the moment slab shall be class 4000 typically and class 4000A when the top of the slab is used as the roadway, or sidewalk, surface. The concrete class for the barrier is defined in Standard Specification Section 6-10.3."

C-85.11
On Section B, the callout "3" EXPANDED POLYSTYRENE AROUND COLUMN (TYP.)" is revised to read "3" EXPANDED POLYSTYRENE OR POLYETHYLENE FOAM AROUND COLUMN (TYP.)"

D-3.09
Sheet 1, Geosynthetic Wall with 2 FT Traffic Surcharge detail, callout – "BARRIER ON WALL ~ SEE Standard Plan D-3.15 or D-3.16" is revised to read: "BARRIER ON WALL ~ SEE Standard Plan C-81.10 and/or C-81.15"

Provided to Builders Exchange of WA, Inc. For usage Conditions Agreement see www.bxwa.com - Always Verify Scal

D-3.10
Sheet 1, Typical Section, callout – "FOR WALLS WITH SINGLE SLOPE TRAFFIC BARRIER. USE THE DETAILS ABOVE THE MATCH LINE ON STANDARD PLAN D-3.15" is revised to read; "FOR WALLS WITH SINGLE SLOPE TRAFFIC BARRIER, SEE CONTRACT PLANS"
Sheet 1, Typical Section, callout – "FOR WALLS WITH F-SHAPE TRAFFIC BARRIER. USE THE DETAILS ABOVE THE MATCH LINE ON STANDARD PLAN D-3.16" is revised to read; "FOR WALLS WITH F-SHAPE TRAFFIC BARRIER, SEE CONTRACT PLANS"

D-3.11
Sheet 1, Typical Section, callout – ""B" BRIDGE APPROACH SLAB (SEE BRIDGE PLANS) OR PERMANENT GEOSYNTHETIC WALL BARRIER ~ SEE STANDARD PLANS D-3.15 OR D-3.16" is revised to read; "B" BRIDGE APPROACH SLAB OR MOMENT SLAB (SEE CONTRACT PLANS)
Sheet 1, Typical Section, callout – "TYPICAL BARRIER ON BRIDGE APPROACH SLAB (SEE BRIDGE PLANS) OR PERMANENT GEOSYNTHETIC WALL BARRIER ~ SEE STANDARD PLANS D-3.15 OR D-3.16" is revised to read; "TYPICAL BARRIER ON BRIDGE APPROACH SLAB OR MOMENT SLAB (SEE CONTRACT PLANS)

D-10.10
Note 7, "If Traffic Barriers are required, See Standard Plans D-15.10, D-15.20 and D-15.30" is revised to read "Traffic Barriers shall not be structurally connected to the Reinforced Concrete Retaining Wall Type 1 and 1SW".

D-10.15
Note 7, "If Traffic Barriers are required, See Standard Plans D-15.10, D-15.20 and D-15.30" is revised to read "Traffic Barriers shall not be structurally connected to the Reinforced Concrete Retaining Wall Type 2 and 2SW".

D-10.30
Wall Type 5 may be used in all cases.

D-10.35
Wall Type 6 may be used in all cases.

D-10.40
Note 5, "If Traffic Barriers are required, See Standard Plans D-15.10, D-15.20 and D-15.30" is revised to read "Traffic Barriers shall not be structurally connected to the Reinforced Concrete Retaining Wall Type 7".

D-10.45
Note 5, "If Traffic Barriers are required, See Standard Plans D-15.10, D-15.20 and D-15.30" is revised to read "Traffic Barriers shall not be structurally connected to the Reinforced Concrete Retaining Wall Type 8".

F-10.18
General Note 1; "Construct curb joints at concrete pavement transverse joint locations. If all adjacent pavement is HMA, see Standard Plam F-30.10 for Curb Expansion and Contraction Joint Spacing." Is revised to read – "See Standard Plan F-30.10 and Standard Specification Section 8-04.3 for Curb Expansion and Contraction Joint details and spacing."

Provided to Builders Exchange of WA, Inc. For usage Conditions Agreement see www.bxwa.com - Always Verify Scal

F-30.10

All five instances of the “2.0% MAX.” are replaced with “2.1% MAX.”

F-40.12

The one instance of “2.0% MAX.” is replaced with “2.1% MAX.”

Note 7 is replaced with the following:

7. The running slope of curb ramps shall not exceed 8.3% maximum except as noted herein. If the 8.3% running slope creates a ramp that exceeds 15ft, see contract plans for details. Use a single constant slope from bottom of ramp to top of ramp to match into the landing. Do not include the abutting landing in the Curb Ramp length measurement. When a ramp is constructed on a radius, the Curb Ramp length is measured on the inside radius along the back of the walkway.

Section B is amended as follows:

Delete: “15’ – 0” MAX. (TYP.)”

Section C is amended as follows:

Delete: “15’ – 0” MAX. (TYP.)”

F-40.14

The one instance of “2.0% MAX.” is replaced with “2.1% MAX.”

Note 7 is replaced with the following:

7. The running slope of curb ramps shall not exceed 8.3% maximum except as noted herein. If the 8.3% running slope creates a ramp that exceeds 15ft, see contract plans for details. Use a single constant slope from bottom of ramp to top of ramp to match into the landing. Do not include the abutting landing in the Curb Ramp length measurement. When a ramp is constructed on a radius, the Curb Ramp length is measured on the inside radius along the back of the walkway.

Section A is amended as follows:

Delete: “15’ – 0” MAX. (TYP.)”

Section C is amended as follows:

Delete: “15’ – 0” MAX. (TYP.)”

F-40.15

The one instance of “2.0% MAX.” is replaced with “2.1% MAX.”

Note 7 is replaced with the following:

7. The running slope of curb ramps shall not exceed 8.3% maximum except as noted herein. If the 8.3% running slope creates a ramp that exceeds 15ft, see contract plans for details. Use a single constant slope from bottom of ramp to top of ramp to match into the landing. Do not include the abutting landing in the Curb Ramp length measurement.

Section A is amended as follows:

Delete: “15’ – 0” MAX. (TYP.)”

F-40.16

The one instance of “2.0% MAX.” is replaced with “2.1% MAX.”

Note 8 is replaced with the following:

7. The running slope of curb ramps shall not exceed 8.3% maximum except as noted herein. If the 8.3% running slope creates a ramp that exceeds 15ft, see contract plans for details. Use a single constant slope from bottom of ramp to top of ramp to match into the landing. Do not include the abutting landing in the Curb Ramp length measurement.

Section A is amended as follows:

Delete: “15’ – 0” MAX. (TYP.)”

Section B is amended as follows:

Provided to Builders Exchange of WA, Inc. For usage Conditions Agreement see www.bxwa.com - Always Verify Scal

Delete: “15’ – 0” MAX. (TYP.)”

F-80.10

The one instance of “2.0% MAX.” is replaced with “2.1% MAX.”

Note 6 is replaced with the following:

The running slope of the Pedestrian Ramp shall not exceed 8.3% maximum except as noted herein. If the 8.3% running slope creates a ramp that exceeds 15ft, see contract plans for details. Use a single constant slope from bottom of ramp to top of ramp to match into the sidewalk.

Section A is amended as follows:

Delete: “15” Max.”

J-10.10

Sheet 4 of 6, “Foundation Size Reference Table”, PAD WIDTH column, Type 33xD=6’ – 3” is revised to read: 7’ – 3”. Type 342LX / NEMA P44=5’ – 10” is revised to read: 6’ – 10”

Sheet 5 of 6, Plan View, “FOR EXAMPLE PAD SHOWN HERE:, “first bullet” item, “-SPACE BETWEEN TYPE B MOD. CABINET AND 33x CABINET IS 6” (IN)” IS REVISED TO READ: “SPACE BETWEEN TYPE B MOD. CABINET (BACK OF ALL CHANNEL STEEL) AND 33x CABINET IS 6” (IN) (CHANNEL STEEL ADDS ABOUT 5” (IN)”

J-10.16

Key Note 1, Standard Plan J-10.30 revised to Standard Plan J-10.14

J-10.17

Key Note 1, Standard Plan J-10.30 revised to Standard Plan J-10.14

J-10.18

Key Note 1, Standard Plan J-10.30 revised to Standard Plan J-10.14

J-20.10

DELETED

J-20.11

DELETED

J-20.26

Add Note 1, “1. One accessible pedestrian pushbutton station per pedestrian pushbutton post.”

Add General Note 2, to read: “Signs shown are for locations with pedestrian signal displays (Accessible Pedestrian Signals/APS). Accessible information device (AID) pushbuttons signs not shown.”

Revise View Titles (Both Sheets) to read: “ACCESSIBLE PEDESTRIAN PUSHBUTTON ASSEMBLY”

J-20.16

View A, callout, was – LOCK NIPPLE, is revised to read; CHASE NIPPLE

J-21.10

Sheet 1, Anchor Bolt Template, callout; “9” (IN) BOLT CIRCLE” is revised to read: “9” (IN) DIA.BOLT CIRCLE”

Provided to Builders Exchange of WA, Inc. For usage Conditions Agreement see www.bxwa.com - Always Verify Scal

Base Plate Detail, callout; “3/4” (IN) STEEL PLATE WITH HOLE = POLE BASE + 1/6” (IN)” IS REVISED TO READ; “3/4” (IN) STEEL PLATE WITH HOLE = POLE BASE + 1/16” (IN)”
Flat Foundation Detail – Elevation, callout; “ANCHOR BOLTS ~ ¾” (IN) x 30” (IN) FULL THREAD ~ THREE REQ’D. PER ASSEMBLY” is revised to read; “ANCHOR BOLTS ~ ¾” (IN) x 30” (IN) FULL THREAD ~ FOUR REQ’D. PER ASSEMBLY”
Flat Foundation Detail – Elevation, dimension; 4’ – 0” is revised to read; “4’ – 0” ROUND OR 3’ – 0” SQUARE”

J-21.15
Partial View, callout, was – LOCK NIPPLE ~ 1 ½” DIAM., is revised to read; CHASE NIPPLE ~ 1 ½” (IN) DIAM.

J-28.30
General Note 13 – “See Standard Plans C-8b and C-85.14 for steel light standards on traffic barrier” is revised to read; “See Standard Plan C-85.15 for steel light standards on traffic barrier.”

J-40.10
Sheet 2 of 2, Detail F, callout, “12 – 13 x 1 ½” S.S. PENTA HEAD BOLT AND 12” S. S. FLAT WASHER” is revised to read; “12 – 13 x 1 ½” S.S. PENTA HEAD BOLT AND 1/2” (IN) S. S. FLAT WASHER”

J-40.36
Note 1, second sentence; ”Finish shall be # 2B for backbox and # 4 for the cover.” Is revised to read; ”Finish shall be # 2B for barrier box and HRAP (Hot Rolled Annealed and Pickled) for the cover.

J-40.37
Note 1, second sentence; ”Finish shall be # 2B for backbox and # 4 for the cover.” Is revised to read; ”Finish shall be # 2B for barrier box and HRAP (Hot Rolled Annealed and Pickled) for the cover.

J-75.20
Key Notes, note 16, second bullet point, was: “1/2” (IN) x 0.45” (IN) Stainless Steel Bands”, add the following to the end of the note: “Alternate: Stainless steel cable with stainless steel ends, nuts, bolts, and washers may be used in place of stainless steel bands and associated hardware.”

J-75.55
Notes, Note A1, Revise reference, was – G-90.29, should be – G-90.20.

L-5.10
Add new general Note 9 on sheet 1 – “9. The top of wall in Section A on Sheet 1 shall be located as follows: 1) flush with the finished grade when placed within the deflection distance of the long span guardrail system (Std. Plan C-20.40), 2) Two inches maximum above finished grade when placed behind a box culvert guardrail steel post system (Std. Plan C-20.41 or C-20.43), 3) Six inches minimum for all other applications. The bottom rail shall be located at mid height between the top rail and the top of structure.”

M-20.30

Provided to Builders Exchange of WA, Inc. For usage Conditions Agreement see www.bxwa.com - Always Verify Scal

Wide Dotted Lane Line Detail, reference below title, (SEE NOTE 6) is revised to read: (SEE NOTE 5)

M-40.10
Guide Post Type ~ Reflective Sheeting Applications Table, remove reference - "(SEE NOTE 5)"

The following are the Standard Plan numbers applicable at the time this project was advertised. The date shown with each plan number is the publication approval date shown in the lower right-hand corner of that plan. Standard Plans showing different dates shall not be used in this contract.

A-10.10-00 ..... 8/7/07	A-30.35-00 ..... 10/12/07	A-50.10-02 ..... 7/18/24
A-10.20-00 ..... 10/5/07	A-40.00-01 ..... 7/6/22	A-50.40-01 ..... 8/17/21
A-10.30-00 ..... 10/5/07	A-40.10-04 ..... 7/31/19	A-60.10-03 ..... 12/23/14
A-20.10-00 ..... 8/31/07	A-40.15-00 ..... 8/11/09	A-60.20-03 ..... 12/23/14
A-30.10-00 ..... 11/8/07	A-40.20-04 ..... 1/18/17	A-60.30-01 ..... 6/28/18
A-30.30-01 ..... 6/16/11	A-40.50-03 ..... 9/12/23	A-60.40-00 ..... 8/31/07

B-5.20-03 ..... 9/9/20	B-30.50-03 ..... 2/27/18	B-75.20-03 ..... 8/17/21
B-5.40-02 ..... 1/26/17	B-30.60-00 ..... 9/9/20	B-75.50-02 ..... 3/15/22
B-5.60-02 ..... 1/26/17	B-30.40-03 ..... 2/27/18	B-70.60-01 ..... 1/26/17
B-10.20-03 ..... 8/23/23	B-30.70-04 ..... 2/27/18	B-75.60-00 ..... 6/8/06
B-10.40-02 ..... 8/17/21	B-30.80-01 ..... 2/27/18	B-80.20-00 ..... 6/8/06
B-10.70-03 ..... 8/23/23	B-30.90-02 ..... 1/26/17	B-80.40-00 ..... 6/1/06
B-15.20-01 ..... 2/7/12	B-35.20-00 ..... 6/8/06	B-85.10-01 ..... 6/10/08
B-15.40-01 ..... 2/7/12	B-35.40-01 ..... 8/23/23	B-85.20-00 ..... 6/1/06
B-15.60-02 ..... 1/26/17	B-40.20-00 ..... 6/1/06	B-85.30-00 ..... 6/1/06
B-20.20-02 ..... 3/16/12	B-40.40-02 ..... 1/26/17	B-85.40-00 ..... 6/8/06
B-20.40-04 ..... 2/27/18	B-45.20-01 ..... 7/11/17	B-85.50-01 ..... 6/10/08
B-20.60-03 ..... 3/15/12	B-45.40-01 ..... 7/21/17	B-90.10-00 ..... 6/8/06
B-25.20-02 ..... 2/27/18	B-50.20-00 ..... 6/1/06	B-90.20-00 ..... 6/8/06
B-25.60-03 ..... 8/23/23	B-55.20-03 ..... 8/17/21	B-90.30-00 ..... 6/8/06
B-30.05-00 ..... 9/9/20	B-60.20-02 ..... 9/9/20	B-90.40-01 ..... 1/26/17
B-30.10-03 ..... 2/27/18	B-60.40-01 ..... 2/27/18	B-90.50-00 ..... 6/8/06
B-30.15-00 ..... 2/27/18	B-65.20-01 ..... 4/26/12	B-95.20-02 ..... 8/17/21
B-30.20-04 ..... 2/27/18	B-65.40-00 ..... 6/1/06	B-95.40-01 ..... 6/28/18
B-30.30-03 ..... 2/27/18	B-70.20-01 ..... 3/15/22	

C-1 ..... 9/8/22	C-23.70-01 ..... 10/16/23	C-70.10-04 ..... 10/16/23
C-1b 10/12/23	C.24.10-05 ..... 7/21/24	C-70.15-01 ..... 7/21/24
C-1d 10/31/03	C-24.15-00 ..... 3/15/22	C-75.10-02 ..... 9/16/20
C-6a 9/8/22	C-25.20-07 ..... 8/20/21	C-75.20-03 ..... 8/20/21
C-7 ..... 9/8/22	C-25.22-06 ..... 8/20/21	C-75.30-03 ..... 8/20/21
C-7a 9/8/22	C-25.26-05 ..... 8/20/21	C-80.10-03 ..... 10/16/23
C-20.10-09 ..... 10/12/23	C-25.30-01 ..... 8/20/21	C-80.20-01 ..... 6/11/14
C-20.14-05 ..... 9/8/22	C-25.32-00 ..... 7/29/24	C-80.30-02 ..... 8/20/21
C-20.15-03 ..... 10/12/23	C-25.80-05 ..... 8/12/19	C-80.40-01 ..... 6/11/14
C-20.18-04 ..... 9/8/22	C-60.10-04 ..... 7/21/24	C-85.10-00 ..... 4/8/12
C-20.40-10 ..... 10/12/23	C-60.15-01 ..... 7/21/24	C-85.11-01 ..... 9/16/20
C-20.41-05 ..... 7/18/24	C-60.20-01 ..... 9/8/22	C-85.15-03 ..... 10/17/23

Provided to Builders Exchange of WA, Inc. For usage Conditions Agreement see www.bxwa.com - Always Verify Scal

C-20.43-01 ..... 7/18/24
C-20.44-00 ..... 8/13/24
C-20.45-03 ..... 9/8/22
C-20.55-00 ..... 7/30/24
C-22.16-08 ..... 10/17/23
C-22.40-11 ..... 7/21/24
C-22.45-07 ..... 7/21/24
C-60.30-02..... 7/21/24
C-60.40-01..... 7/21/24
C-60.45-01..... 7/21/24
C-60.50-01..... 7/21/24
C-60.60-01..... 7/21/24
C-60.70-01..... 9/8/22
C-60.80-02..... 7/21/24
C-85-18-03 .....9/8/22
C-81.10-00 .....9/12/23
C-81.15-00 .....9/12/23

1

D-2.36-03..... 6/11/14
D-2.46-02..... 8/13/21
D-2.84-00..... 11/10/05
D-2.92-01..... 4/26/22
D-3.09-00..... 5/17/12
D-3.10-01..... 5/29/13
D-3.11-03.....6/11/14
D-4.....12/11/98
D-6..... 6/19/98
D-10.10-01..... 12/2/08
D-10.15-01..... 12/2/08
D-10.20-01..... 8/7/19
D-10.25-01 .....8/7/19
D-10.30-00 .....7/8/08
D-10.35-00 .....7/8/08
D-10.40-01 .....12/2/08
D-10.45-01 .....12/2/08
D-20.10-00 .....10/9/23

2

E-1 ..... 2/21/07
E-2 ..... 5/29/98
E-4..... 8/27/03
E-4a 8/27/03
E-20.10-00.....9/12/23
E-20.20-00.....10/4/23

3

F-10.12-04 ..... 9/24/20
F-10.16-00 ..... 12/20/06
F-10.18-04 ..... 6/28/24
F-10.40-04 ..... 9/24/20
F-10.42-00 ..... 1/23/07
F-10.62-02 ..... 4/22/14
F-10.64-03 ..... 4/22/14
F-30.10-04 ..... 9/25/20
F-40.12-03 ..... 6/29/16
F-40.14-03 ..... 6/29/16
F-40.15-04.....9/25/20
F-40.16-03.....6/29/16
F-45.10-05.....6/4/24
F-80.10-04.....7/15/16

4

G-10.10-00..... 9/20/07
G-20.10-03..... 8/20/21
G-22.10-04..... 6/28/18
G-24.10-00..... 11/8/07
G-24.20-01..... 2/7/12
G-24.30-02..... 6/28/18
G-24.40-07..... 6/28/18
G-24.50-05 ..... 8/7/19
G-24.60-05 ..... 6/28/18
G-25.10-05 ..... 9/16/20
G-26.10-00 ..... 7/31/19
G-30.10-04 ..... 6/23/15
G-50.10-03 ..... 6/28/18
G-90.10-03 ..... 7/11/17
G-90.20-05 ..... 7/11/17
G-90.30-04 ..... 7/11/17
G-95.10-02 .....6/28/18
G-95.20-03 .....6/28/18
G-95.30-03 .....6/28/18

5

H-10.10-01 ..... 6/2/24
H-10.11-00 ..... 6/2/24
H-10.15-01 ..... 6/2/24
H-10.16-00 ..... 6/2/24
H-30.10-00.....10/12/07
H-32.10-00..... 9/20/07
H-60.10-01..... 7/3/08
H-60.20-01..... 7/3/08
H-70.10-02 .....8/17/21
H-70.20-02 .....8/17/21

6

I-10.10-01..... 8/11/09
I-30.10-02..... 3/22/13
I-30.15-02..... 3/22/13
I-30.16-01..... 7/11/19
I-30.17-01..... 6/12/19
I-30.20-00 ..... 9/20/07
I-30.30-02 ..... 6/12/19
I-30.40-02 ..... 6/12/19
I-30.60-02 ..... 6/12/19
I-40.10-00 ..... 9/20/07
I-40.20-00 .....9/20/07
I-50.20-02 .....7/6/22
I-60.10-01 .....6/10/13
I-60.20-01 .....6/10/13
I-80.10-02 .....7/15/16

7

J-05.50-00..... 8/30/22
J-10..... 7/18/97
J-10.10-04..... 9/16/20
J-10.12-00..... 9/16/20
J-10.14-00..... 9/16/20
J-10.15-01..... 6/11/14
J-10.16-02..... 8/18/21
J-10.17-02..... 8/18/21
J-26.10-03 ..... 7/21/16
J-26.15-01 ..... 5/17/12
J-26.20-01 ..... 6/28/18
J-27.10-01 ..... 7/21/16
J-27.15-00 ..... 3/15/12
J-28.01-00 ..... 8/30/22
J-28.10-02 ..... 8/7/19
J-28.22-00 ..... 8/07/07
J-50.05-00 .....7/21/17
J-50.10-01 .....7/31/19
J-50.11-02.....7/31/19
J-50.12-02 .....8/7/19
J-50.13-01 .....8/30/22
J-50.15-01 .....7/21/17
J-50.16-01 .....3/22/13
J-50.18-00 .....8/7/19

Provided to Builders Exchange of WA, Inc. For usage Conditions Agreement see www.bxwa.com - Always Verify Scal

J-10.18-02 ..... 8/18/21
J-10.20-04 ..... 8/18/21
J-10.21-02 ..... 8/18/21
J-10.22-03 ..... 10/4/23
J-10.25-01 ..... 6/21/24
J-10.26-00 ..... .8/30/22
J-12.15-00 ..... 6/28/18
J-12.16-00 ..... 6/28/18
J-15.10-01 ..... 6/11/14
J-15.15-02 ..... 7/10/15
J-20.01-01 ..... .6/21/24
J-20.05-00 ..... 6/21/24
J-20.10-05 ..... 10/4/23
J-20.11-03 ..... 7/31/19
J-20.15-04 ..... 6/21/24
J-20.16-02 ..... 6/30/14
J-20.20-02 ..... 5/20/13
J-20.26-01 ..... 7/12/12
J-21.10-05 ..... 6/21/24
J-21.15-01 ..... 6/10/13
J-21.16-02 ..... 6/21/24
J-21.17-01 ..... 6/10/13
J-21.20-01 ..... 6/10/13
J-22.15-03 ..... 6/21/24
J-22.16-03 ..... 7/10/15
J-22.17-00 ..... 6/21/24
J-28.24-02 ..... 9/16/20
J-28.26-01 .....12/02/08
J-28.30-04 ..... 6/18/24
J-28.40-02 .....6/11/14
J-28.42-01 .....6/11/14
J-28.43-01 ..... 6/28/18
J-28.45-03 ..... 7/21/16
J-28.50-03 ..... 7/21/16
J-28.60-03 ..... 8/27/21
J-28.70-04 ..... 8/30/22
J-29.10-02 ..... 8/26/22
J-29.15-01 ..... 7/21/16
J-29.16-02 ..... 7/21/16
J-30.10-01 ..... 8/26/22
J-40.01-00 ..... 8/30/22
J-40.05-00 ..... 7/21/16
J-40.10-04 ..... 4/28/16
J-40.20-03 ..... 4/28/16
J-40.30-04 ..... 4/28/16
J-40.35-01 ..... 5/29/13
J-40.36-02 ..... 7/21/17
J-40.37-02 ..... 7/21/17
J-40.38-01 ..... 5/20/13
J-40.39-00 ..... 5/20/13
J-40.40-02 ..... 7/31/19
J-45.36-00 ..... 7/21/17
J-50.19-00 .....8/7/19
J-50.20-00 .....6/3/11
J-50.25-00 .....6/3/11
J-50.30-00 .....6/3/11
J-60.05-01 .....7/21/16
J-60.11-00.....5/20/13
J-60.12-00 .....5/20/13
J-60.13-00 .....6/16/10
J-60.14-01 .....7/31/19
J-75.10-02 .....7/10/15
J-75.20-01 .....7/10/15
J-75.30-02 .....7/10/15
J-75.50-00 .....8/30/22
J-75.55-00 .....8/30/22
J-80.05-00 .....8/30/22
J-80.10-01 .....8/18/21
J-80.12-00 .....8/18/21
J-80.15-00 .....6/28/18
J-81.10-02 .....8/18/21
J-81.12-00 .....9/3/21
J-84.05-00 .....8/30/22
J-86.10-00 .....6/28/18
J-90.10-03 .....6/28/18
J-90.20-03 .....6/28/18
J-90.21-02 .....6/28/18
J-90.50-00 .....6/28/18

1

K-70.20-01 ..... 6/1/16
K-80.10-02 ..... 9/25/20
K-80.32-00..... 8/17/21
K-80.34-00..... 8/17/21
K-80.35-01.....9/16/20
K-80.37-01.....9/16/20

2

L-5.10-02..... 6/5/24
L-5.15-00..... 9/19/22
L-10.10-02..... 6/21/12
L-20.10-03 ..... 7/14/15
L-30.10-02 .....6/11/14
L-40.15-01 .....6/16/11
L-40.20-02 .....6/21/12
L-70.10-01 .....5/21/08
L-70.20-01 .....5/21/08

3

M-1.20-04..... 9/25/20
M-1.40-03..... 9/25/20
M-1.60-03..... 9/25/20
M-1.80-03..... 6/3/11
M-2.20-03..... 7/10/15
M-2.21-00..... 7/10/15
M-3.10-04..... 9/25/20
M-3.20-04..... 8/2/22
M-3.30-04..... 9/25/20
M-3.40-04..... 9/25/20
M-3.50-03..... 9/25/20
M-5.10-03..... 9/25/20
M-7.50-01..... 1/30/07
M-9.50-02..... 6/24/14
M-9.60-00 ..... 2/10/09
M-11.10-04..... 8/2/22
M-12.10-04 ..... 6/28/24
M-15.10-02 ..... 7/17/23
M-17.10-02 ..... 7/3/08
M-20.10-04 ..... 8/2/22
M-20.20-02 ..... 4/20/15
M-20.30-05 ..... 6/28/24
M-20.40-03 ..... 6/24/14
M-20.50-02 .....6/3/11
M-24.20-02 ..... 4/20/15
M-24.40-02 ..... 4/20/15
M-24.60-04 ..... 6/24/14
M-24.65-00 .....7/11/17
M-24.66-00 .....7/11/17
M-40.10-04 .....10/17/23
M-40.20-00 .....10/12/07
M-40.30-01 .....7/11/17
M-40.40-00 .....9/20/07
M-40.50-00 .....9/20/07
M-40.60-00 .....9/20/07
M-60.10-01 .....6/3/11
M-60.20-03 .....8/17/21
M-65.10-03 .....8/17/21
M-80.10-01 .....6/3/11
M-80.20-00 .....6/10/08
M-80.30-00 .....6/10/08

4

Provided to Builders Exchange of WA, Inc. For usage Conditions Agreement see www.bxwa.com - Always Verify Scal

APPENDIX A
WASHINGTON STATE PREVAILING WAGE RATES FOR SNOHOMISH COUNTY

Prevailing wage rates for this project area and size can be found at the Washington State Department of Bureau of Labor Industries or on the internet at:

https://secure.lni.wa.gov/wagelookup/

Provided to Builders Exchange of WA, Inc. For usage Conditions Agreement see www.bxwa.com - Always Verify Scal

State of Washington
Department of Labor & Industries
Prevailing Wage Section - Telephone 360-902-5335
PO Box 44540, Olympia, WA 98504-4540

Washington State Prevailing Wage

The PREVAILING WAGES listed here include both the hourly wage rate and the hourly rate of fringe benefits. On public works projects, worker's wage and benefit rates must add to not less than this total. A brief description of overtime calculation requirements are provided on the Benefit Code Key.

Journey Level Prevailing Wage Rates for the Effective Date: 04/21/2026

Snohomish County

Trade	Job Classification	Wage	Holiday	Overtime	Note
Asbestos Abatement Workers	Journey Level	$67.39	**5D**	**1H**	
Boilermakers	Journey Level	$80.89	**5N**	**1C**	
Brick Mason	Journey Level	$76.07	**7E**	**1N**	
Brick Mason	Pointer-Caulker-Cleaner	$76.07	**7E**	**1N**	
Building Service Employees	Janitor	$17.13		**1**	
Building Service Employees	Shampooer	$17.13		**1**	
Building Service Employees	Waxer	$17.13		**1**	

Provided to Builders Exchange of WA, Inc. For usage Conditions Agreement see www.bxwa.com - Always Verify Scal

Building Service Employees	Window Cleaner	$17.13		1	
Cabinet Makers (In Shop)	Journey Level	$27.33	5C	2M	
Carpenters	Acoustical Worker	$83.21	15J	11U	
Carpenters	Bridge Dock and Wharf Carpenter	$84.81	15J	11U	9L
Carpenters	Floor Layer & Floor Finisher	$83.21	15J	11U	
Carpenters	General Carpenter	$83.21	15J	11U	
Carpenters	Scaffold Erector	$83.21	15J	11U	
Cement Masons	Application of all Composition Mastic	$81.87	15J	4U	
Cement Masons	Application of all Epoxy Material	$81.36	15J	4U	
Cement Masons	Application of all Plastic Material	$81.87	15J	4U	
Cement Masons	Application of Sealing Compound	$81.36	15J	4U	
Cement Masons	Application of Underlayment	$81.87	15J	4U	
Cement Masons	Building General	$81.36	15J	4U	
Cement Masons	Composition or Kalman Floors	$81.87	15J	4U	

Provided to Builders Exchange of WA, Inc. For usage Conditions Agreement see www.bxwa.com - Always Verify Scal

Cement Masons	Concrete Paving	$81.36	**15J**	**4U**
Cement Masons	Curb & Gutter Machine	$81.87	**15J**	**4U**
Cement Masons	Curb & Gutter, Sidewalks	$81.36	**15J**	**4U**
Cement Masons	Curing Concrete	$81.36	**15J**	**4U**
Cement Masons	Finish Colored Concrete	$81.87	**15J**	**4U**
Cement Masons	Floor Grinding	$81.87	**15J**	**4U**
Cement Masons	Floor Grinding/Polisher	$81.36	**15J**	**4U**
Cement Masons	Green Concrete Saw, self-powered	$81.87	**15J**	**4U**
Cement Masons	Grouting of all Plates	$81.36	**15J**	**4U**
Cement Masons	Grouting of all Tilt-up Panels	$81.36	**15J**	**4U**
Cement Masons	Gunite Nozzleman	$81.87	**15J**	**4U**
Cement Masons	Hand Powered Grinder	$81.87	**15J**	**4U**
Cement Masons	Journey Level	$81.36	**15J**	**4U**
Cement Masons	Patching Concrete	$81.36	**15J**	**4U**
Cement Masons	Pneumatic Power Tools	$81.87	**15J**	**4U**
Cement Masons	Power Chipping & Brushing	$81.87	**15J**	**4U**

Provided to Builders Exchange of WA, Inc. For usage Conditions Agreement see www.bxwa.com - Always Verify Scal

Cement Masons	Sand Blasting Architectural Finish	$81.87	**15J**	**4U**	
Cement Masons	Screed & Rodding Machine	$81.87	**15J**	**4U**	
Cement Masons	Spackling or Skim Coat Concrete	$81.36	**15J**	**4U**	
Cement Masons	Troweling Machine Operator	$81.87	**15J**	**4U**	
Cement Masons	Troweling Machine Operator on Colored Slabs	$81.87	**15J**	**4U**	
Cement Masons	Tunnel Workers	$81.87	**15J**	**4U**	
Divers & Tenders	Bell/Vehicle/Submersible Operator (not under pressure)	$144.72	**15J**	**11T**	**9I**
Divers & Tenders	Dive Supervisor	$146.22	**15J**	**11T**	**9I**
Divers & Tenders	Diver	$144.72	**15J**	**11T**	**9I**
Divers & Tenders	Diver Tender	$91.05	**15J**	**11T**	**9I**
Divers & Tenders	Hyperbaric Worker - Compressed Air Worker 0-30.00 PSI	$114.73	**15J**	**11U**	
Divers & Tenders	Hyperbaric Worker - Compressed Air Worker 30.01-44.00 PSI	$124.28	**15J**	**11U**	

Provided to Builders Exchange of WA, Inc. For usage Conditions Agreement see www.bxwa.com - Always Verify Scal

Divers & Tenders	Hyperbaric Worker - Compressed Air Worker 44.01 - 54.00 PSI	$133.82	**15J**	**11U**	
Divers & Tenders	Hyperbaric Worker - Compressed Air Worker 54.01 - 60.00 PSI	$143.37	**15J**	**11U**	
Divers & Tenders	Hyperbaric Worker - Compressed Air Worker 60.01 - 64.00 PSI	$152.91	**15J**	**11U**	
Divers & Tenders	Hyperbaric Worker - Compressed Air Worker 64.01 - 68.00 PSI	$162.46	**15J**	**11U**	
Divers & Tenders	Hyperbaric Worker - Compressed Air Worker 68.01 - 70.00 PSI	$172.00	**15J**	**11U**	
Divers & Tenders	Hyperbaric Worker - Compressed Air Worker 70.01 - 72.00 PSI	$181.55	**15J**	**11U**	
Divers & Tenders	Hyperbaric Worker - Compressed Air Worker 72.01 - 74.00 PSI	$191.09	**15J**	**11U**	
Divers & Tenders	Lead Diver (Dive Master)	$105.51	**15J**	**11T**	**9I**
Divers & Tenders	Manifold Operator (Life Support Technician)	$96.05	**15J**	**11U**	**9I**
Divers & Tenders	Remote Operated Vehicle Operator/Technician	$91.05	**15J**	**11T**	**9I**

Provided to Builders Exchange of WA, Inc. For usage Conditions Agreement see www.bxwa.com - Always Verify Scal

Divers & Tenders	Remote Operated Vehicle Operator/Technician	$91.05	**15J**	**11U**	**9I**
Divers & Tenders	Remote Operated Vehicle Tender	$84.75	**15J**	**11T**	**9I**
Divers & Tenders	Stand-by Diver	$100.51	**15J**	**11T**	**9I**
Dredge Workers	Assistant Engineer	$89.47	**5D**	**3F**	
Dredge Workers	Assistant Mate (Deckhand)	$88.78	**5D**	**3F**	
Dredge Workers	Boatmen	$89.47	**5D**	**3F**	
Dredge Workers	Engineer Welder	$91.20	**5D**	**3F**	
Dredge Workers	Leverman, Hydraulic	$93.03	**5D**	**3F**	
Dredge Workers	Mates	$89.47	**5D**	**3F**	
Dredge Workers	Oiler	$88.78	**5D**	**3F**	
Drywall Applicator	Journey Level	$81.71	**15O**	**11S**	
Drywall Tapers	Journey Level	$81.71	**15O**	**11S**	
Electrical Fixture Maintenance Workers	Journey Level	$17.13		**1**	
Electricians - Inside	Cable Splicer	$100.52	**7H**	**1E**	
Electricians - Inside	Construction Stock Person	$48.08	**7H**	**1D**	

Provided to Builders Exchange of WA, Inc. For usage Conditions Agreement see www.bxwa.com - Always Verify Scal

Electricians - Inside	Journey Level	$94.06	7H	1E	
Electricians - Motor Shop	Craftsman	$17.13		1	
Electricians - Motor Shop	Journey Level	$17.13		1	
Electricians - Powerline Construction	Cable Splicer	$107.31	5A	4D	
Electricians - Powerline Construction	Certified Line Welder	$98.45	5A	4D	
Electricians - Powerline Construction	Groundperson	$61.75	5A	4D	
Electricians - Powerline Construction	Heavy Line Equipment Operator	$98.45	5A	4D	
Electricians - Powerline Construction	Journey Level Lineperson	$98.45	5A	4D	
Electricians - Powerline Construction	Line Equipment Operator	$84.18	5A	4D	
Electricians - Powerline Construction	Meter Installer	$61.75	5A	4D	8W
Electricians - Powerline Construction	Pole Sprayer	$98.45	5A	4D	
Electricians - Powerline Construction	Powderperson	$72.81	5A	4D	
Electronic Technicians	Electronic Technicians Journey Level	$62.05	5B	1B	

Provided to Builders Exchange of WA, Inc. For usage Conditions Agreement see www.bxwa.com - Always Verify Scal

Elevator Constructors	Mechanic	$119.17	7D	4A	
Elevator Constructors	Mechanic In Charge	$128.95	7D	4A	
Fabricated Precast Concrete Products	Journey Level	$17.13		1	
Fabricated Precast Concrete Products	Journey Level - In-Factory Work Only	$17.13		1	
Fence Erectors	Fence Erector	$57.66	15J	11P	8Y
Fence Erectors	Fence Laborer	$57.66	15J	11P	8Y
Flaggers	Journey Level	$57.66	15J	11P	8Y
Glaziers	Journey Level	$85.16	7L	1Y	
Heat & Frost Insulators And Asbestos Workers	Journey Level	$96.42	15H	11C	
Heating Equipment Mechanics	Journey Level	$107.92	7F	1E	
Hod Carriers & Mason Tenders	Journey Level	$71.09	15J	11P	8Y
Industrial Power Vacuum Cleaner	Journey Level	$17.13		1	
Inland Boatmen	Boat Operator	$71.28	5B	1K	
Inland Boatmen	Cook	$69.70	5B	1K	
Inland Boatmen	Deckhand	$70.00	5B	1K	

Provided to Builders Exchange of WA, Inc. For usage Conditions Agreement see www.bxwa.com - Always Verify Scal

Inland Boatmen	Deckhand Engineer	$69.55	**5B**	**1K**
Inland Boatmen	Launch Operator	$71.23	**5B**	**1K**
Inland Boatmen	Mate	$89.12	**5B**	**1K**
Inspection/Cleaning/Sealing Of Sewer & Water Systems By Remote Control	Cleaner Operator	$54.56	**15M**	**11O**
Inspection/Cleaning/Sealing Of Sewer & Water Systems By Remote Control	Foamer Operator	$54.56	**15M**	**11O**
Inspection/Cleaning/Sealing Of Sewer & Water Systems By Remote Control	Grout Truck Operator	$54.56	**15M**	**11O**
Inspection/Cleaning/Sealing Of Sewer & Water Systems By Remote Control	Head Operator	$52.40	**15M**	**11O**
Inspection/Cleaning/Sealing Of Sewer & Water Systems By Remote Control	Technician	$45.97	**15M**	**11O**
Inspection/Cleaning/Sealing Of Sewer & Water Systems By Remote Control	TV Truck Operator	$49.20	**15M**	**11O**
Insulation Applicators	Journey Level	$83.21	**15J**	**11U**
Ironworkers	Journeyman	$94.82	**15K**	**11N**

Provided to Builders Exchange of WA, Inc. For usage Conditions Agreement see www.bxwa.com - Always Verify Scal

Laborers	Air, Gas Or Electric Vibrating Screed	$67.39	**15J**	**11P**	**8Y**
Laborers	Airtrac Drill Operator	$69.37	**15J**	**11P**	**8Y**
Laborers	Ballast Regular Machine	$67.39	**15J**	**11P**	**8Y**
Laborers	Batch Weighman	$57.66	**15J**	**11P**	**8Y**
Laborers	Brick Pavers	$67.39	**15J**	**11P**	**8Y**
Laborers	Brush Cutter	$67.39	**15J**	**11P**	**8Y**
Laborers	Brush Hog Feeder	$67.39	**15J**	**11P**	**8Y**
Laborers	Burner	$67.39	**15J**	**11P**	**8Y**
Laborers	Caisson Worker	$69.37	**15J**	**11P**	**8Y**
Laborers	Carpenter Tender	$67.39	**15J**	**11P**	**8Y**
Laborers	Cement Dumper-paving	$69.37	**15J**	**11P**	**8Y**
Laborers	Cement Finisher Tender	$67.39	**15J**	**11P**	**8Y**
Laborers	Change House Or Dry Shack	$67.39	**15J**	**11P**	**8Y**
Laborers	Chipping Gun (30 Lbs. And Over)	$68.56	**15J**	**11P**	**8Y**
Laborers	Chipping Gun (Under 30 Lbs.)	$67.39	**15J**	**11P**	**8Y**
Laborers	Choker Setter	$67.39	**15J**	**11P**	**8Y**

Provided to Builders Exchange of WA, Inc. For usage Conditions Agreement see www.bxwa.com - Always Verify Scal

Laborers	Chuck Tender	$67.39	**15J**	**11P**	**8Y**
Laborers	Clary Power Spreader	$68.56	**15J**	**11P**	**8Y**
Laborers	Clean-up Laborer	$67.39	**15J**	**11P**	**8Y**
Laborers	Concrete Dumper/Chute Operator	$69.37	**15J**	**11P**	**8Y**
Laborers	Concrete Form Stripper	$67.39	**15J**	**11P**	**8Y**
Laborers	Concrete Placement Crew	$69.37	**15J**	**11P**	**8Y**
Laborers	Concrete Saw Operator/Core Driller	$68.56	**15J**	**11P**	**8Y**
Laborers	Crusher Feeder	$57.66	**15J**	**11P**	**8Y**
Laborers	Curing Laborer	$67.39	**15J**	**11P**	**8Y**
Laborers	Demolition: Wrecking & Moving (Incl. Charred Material)	$67.39	**15J**	**11P**	**8Y**
Laborers	Ditch Digger	$67.39	**15J**	**11P**	**8Y**
Laborers	Diver	$69.37	**15J**	**11P**	**8Y**
Laborers	Drill Operator (Hydraulic, Diamond)	$68.56	**15J**	**11P**	**8Y**
Laborers	Dry Stack Walls	$67.39	**15J**	**11P**	**8Y**
Laborers	Dump Person	$67.39	**15J**	**11P**	**8Y**

Provided to Builders Exchange of WA, Inc. For usage Conditions Agreement see www.bxwa.com - Always Verify Scal

Laborers	Epoxy Technician	$67.39	**15J**	**11P**	**8Y**
Laborers	Erosion Control Worker	$67.39	**15J**	**11P**	**8Y**
Laborers	Faller & Bucker Chain Saw	$68.56	**15J**	**11P**	**8Y**
Laborers	Fine Graders	$67.39	**15J**	**11P**	**8Y**
Laborers	Firewatch	$57.66	**15J**	**11P**	**8Y**
Laborers	Form Setter	$69.37	**15J**	**11P**	**8Y**
Laborers	Gabian Basket Builders	$67.39	**15J**	**11P**	**8Y**
Laborers	General Laborer	$67.39	**15J**	**11P**	**8Y**
Laborers	Grade Checker & Transit Person	$71.09	**15J**	**11P**	**8Y**
Laborers	Grinders	$67.39	**15J**	**11P**	**8Y**
Laborers	Grout Machine Tender	$67.39	**15J**	**11P**	**8Y**
Laborers	Groutmen (Pressure) Including Post Tension Beams	$68.56	**15J**	**11P**	**8Y**
Laborers	Guardrail Erector	$67.39	**15J**	**11P**	**8Y**
Laborers	Hazardous Waste Worker (Level A)	$69.37	**15J**	**11P**	**8Y**
Laborers	Hazardous Waste Worker (Level B)	$68.56	**15J**	**11P**	**8Y**

Provided to Builders Exchange of WA, Inc. For usage Conditions Agreement see www.bxwa.com - Always Verify Scal

Laborers	Hazardous Waste Worker (Level C)	$67.39	**15J**	**11P**	**8Y**
Laborers	High Scaler	$69.37	**15J**	**11P**	**8Y**
Laborers	Jackhammer	$68.56	**15J**	**11P**	**8Y**
Laborers	Laserbeam Operator	$68.56	**15J**	**11P**	**8Y**
Laborers	Maintenance Person	$67.39	**15J**	**11P**	**8Y**
Laborers	Manhole Builder-Mudman	$68.56	**15J**	**11P**	**8Y**
Laborers	Material Yard Person	$67.39	**15J**	**11P**	**8Y**
Laborers	Mold Abatement Worker	$67.39	**15J**	**11P**	**8Y**
Laborers	Motorman-Dinky Locomotive	$71.19	**15J**	**11P**	**8Y**
Laborers	nozzleman (concrete pump, green cutter when using combination of high pressure air & water on concrete & rock, sandblast, gunite, shotcrete, water blaster, vacuum blaster)	$71.09	**15J**	**11P**	**8Y**
Laborers	Pavement Breaker	$68.56	**15J**	**11P**	**8Y**
Laborers	Pilot Car	$57.66	**15J**	**11P**	**8Y**
Laborers	Pipe Layer (Lead)	$71.09	**15J**	**11P**	**8Y**

Provided to Builders Exchange of WA, Inc. For usage Conditions Agreement see www.bxwa.com - Always Verify Scal

Laborers	Pipe Layer/Tailor	$68.56	**15J**	**11P**	**8Y**
Laborers	Pipe Pot Tender	$68.56	**15J**	**11P**	**8Y**
Laborers	Pipe Reliner	$68.56	**15J**	**11P**	**8Y**
Laborers	Pipe Wrapper	$68.56	**15J**	**11P**	**8Y**
Laborers	Pot Tender	$67.39	**15J**	**11P**	**8Y**
Laborers	Powderman	$69.37	**15J**	**11P**	**8Y**
Laborers	Powderman's Helper	$67.39	**15J**	**11P**	**8Y**
Laborers	Power Jacks	$68.56	**15J**	**11P**	**8Y**
Laborers	Power Washer	$67.39	**15J**	**11P**	**8Y**
Laborers	Railroad Spike Puller - Power	$68.56	**15J**	**11P**	**8Y**
Laborers	Raker - Asphalt	$71.09	**15J**	**11P**	**8Y**
Laborers	Re-timberman	$69.37	**15J**	**11P**	**8Y**
Laborers	Remote Equipment Operator	$68.56	**15J**	**11P**	**8Y**
Laborers	Rigger/Signal Person	$68.56	**15J**	**11P**	**8Y**
Laborers	Rip Rap Person	$67.39	**15J**	**11P**	**8Y**
Laborers	Rivet Buster	$68.56	**15J**	**11P**	**8Y**

Provided to Builders Exchange of WA, Inc. For usage Conditions Agreement see www.bxwa.com - Always Verify Scal

Laborers	Rodder	$69.37	**15J**	**11P**	**8Y**
Laborers	Scaffold Erector	$67.39	**15J**	**11P**	**8Y**
Laborers	Scale Person	$67.39	**15J**	**11P**	**8Y**
Laborers	Sloper (Over 20")	$68.56	**15J**	**11P**	**8Y**
Laborers	Sloper Sprayer	$67.39	**15J**	**11P**	**8Y**
Laborers	Spreader (Concrete)	$69.37	**15J**	**11P**	**8Y**
Laborers	Stake Hopper	$67.39	**15J**	**11P**	**8Y**
Laborers	Stock Piler	$67.39	**15J**	**11P**	**8Y**
Laborers	Swinging Stage/Boatswain Chair	$57.66	**15J**	**11P**	**8Y**
Laborers	Tamper & Similar Electric, Air & Gas Operated Tools	$68.56	**15J**	**11P**	**8Y**
Laborers	Tamper (Multiple & Self-propelled)	$68.56	**15J**	**11P**	**8Y**
Laborers	Timber Person - Sewer (Lagger, Shorer & Cribber)	$68.56	**15J**	**11P**	**8Y**
Laborers	Toolroom Person (at Jobsite)	$67.39	**15J**	**11P**	**8Y**
Laborers	Topper	$67.39	**15J**	**11P**	**8Y**
Laborers	Track Laborer	$67.39	**15J**	**11P**	**8Y**

Provided to Builders Exchange of WA, Inc. For usage Conditions Agreement see www.bxwa.com - Always Verify Scal

Laborers	Track Liner (Power)	$68.56	**15J**	**11P**	**8Y**
Laborers	Traffic Control Laborer	$61.41	**15J**	**11P**	**9C**
Laborers	Traffic Control Supervisor	$64.86	**15J**	**11P**	**9C**
Laborers	Truck Mounted Attenuator	$61.41	**15J**	**11P**	**9C**
Laborers	Truck Spotter	$67.39	**15J**	**11P**	**8Y**
Laborers	Tugger Operator	$68.56	**15J**	**11P**	**8Y**
Laborers	Tunnel Work-Compressed Air Worker 0-30 psi	$225.32	**15J**	**11P**	**9B**
Laborers	Tunnel Work-Compressed Air Worker 30.01-44.00 psi	$230.35	**15J**	**11P**	**9B**
Laborers	Tunnel Work-Compressed Air Worker 44.01-54.00 psi	$234.03	**15J**	**11P**	**9B**
Laborers	Tunnel Work-Compressed Air Worker 54.01-60.00 psi	$239.73	**15J**	**11P**	**9B**
Laborers	Tunnel Work-Compressed Air Worker 60.01-64.00 psi	$241.85	**15J**	**11P**	**9B**
Laborers	Tunnel Work-Compressed Air Worker 64.01-68.00 psi	$246.95	**15J**	**11P**	**9B**

Provided to Builders Exchange of WA, Inc. For usage Conditions Agreement see www.bxwa.com - Always Verify Scal

Laborers	Tunnel Work-Compressed Air Worker 68.01-70.00 psi	$248.85	**15J**	**11P**	**9B**
Laborers	Tunnel Work-Compressed Air Worker 70.01-72.00 psi	$250.85	**15J**	**11P**	**9B**
Laborers	Tunnel Work-Compressed Air Worker 72.01-74.00 psi	$252.85	**15J**	**11P**	**9B**
Laborers	Tunnel Work-Guage and Lock Tender	$71.19	**15J**	**11P**	**8Y**
Laborers	Tunnel Work-Miner	$71.19	**15J**	**11P**	**8Y**
Laborers	Vibrator	$69.37	**15J**	**11P**	**8Y**
Laborers	Vinyl Seamer	$67.39	**15J**	**11P**	**8Y**
Laborers	Watchman	$52.73	**15J**	**11P**	**8Y**
Laborers	Welder	$68.56	**15J**	**11P**	**8Y**
Laborers	Well Point Laborer	$68.56	**15J**	**11P**	**8Y**
Laborers	Window Washer/Cleaner	$52.73	**15J**	**11P**	**8Y**
Laborers - Underground Sewer & Water	General Laborer & Topman	$67.39	**15J**	**11P**	**8Y**
Laborers - Underground Sewer & Water	Pipe Layer	$68.56	**15J**	**11P**	**8Y**

Provided to Builders Exchange of WA, Inc. For usage Conditions Agreement see www.bxwa.com - Always Verify Scal

Landscape Construction	Landscape Construction/Landscaping Or Planting Laborers	$52.73	**15J**	**11P**	**8Y**
Landscape Construction	Landscape Operator	$91.81	**15J**	**11G**	**8X**
Landscape Maintenance	Groundskeeper	$17.13		**1**	
Lathers	Journey Level	$81.71	**15O**	**11S**	
Marble Setters	Journey Level	$76.07	**7E**	**1N**	
Metal Fabrication (In Shop)	Journey Level	$37.56	**0**	**11D**	
Millwright	Journey Level	$80.28	**15J**	**4C**	
Modular Buildings	Journey Level	$17.13		**1**	
Painters	Journey Level	$57.46	**6Z**	**11J**	
Pile Driver	Crew Tender	$80.50	**15J**	**11U**	**9L**
Pile Driver	Journey Level	$84.81	**15J**	**11U**	
Plasterers	Journey Level	$78.60	**7Q**	**1R**	
Plasterers	Nozzleman	$82.70	**7Q**	**1R**	
Playground & Park Equipment Installers	Journey Level	$17.13		**1**	
Plumbers & Pipefitters	Journey Level	$95.37	**5A**	**1G**	

Provided to Builders Exchange of WA, Inc. For usage Conditions Agreement see www.bxwa.com - Always Verify Scal

Power Equipment Operators	Asphalt Plant Operators	$93.36	**15J**	**11G**	**8X**
Power Equipment Operators	Assistant Engineer	$87.77	**15J**	**11G**	**8X**
Power Equipment Operators	Barrier Machine (zipper)	$92.52	**15J**	**11G**	**8X**
Power Equipment Operators	Batch Plant Operator: concrete	$92.52	**15J**	**11G**	**8X**
Power Equipment Operators	Boat Operator	$92.08	**7A**	**11H**	**8X**
Power Equipment Operators	Bobcat	$87.77	**15J**	**11G**	**8X**
Power Equipment Operators	Brokk - Remote Demolition Equipment	$87.77	**15J**	**11G**	**8X**
Power Equipment Operators	Brooms	$87.77	**15J**	**11G**	**8X**
Power Equipment Operators	Bump Cutter	$92.52	**15J**	**11G**	**8X**
Power Equipment Operators	Cableways	$93.36	**15J**	**11G**	**8X**
Power Equipment Operators	Chipper	$92.52	**15J**	**11G**	**8X**
Power Equipment Operators	Compressor	$87.77	**15J**	**11G**	**8X**

Provided to Builders Exchange of WA, Inc. For usage Conditions Agreement see www.bxwa.com - Always Verify Scal

Power Equipment Operators	Concrete Finish Machine - Laser Screed	$87.77	**15J**	**11G**	**8X**
Power Equipment Operators	Concrete Pump - Mounted Or Trailer High Pressure Line Pump, Pump High Pressure	$91.81	**15J**	**11G**	**8X**
Power Equipment Operators	Concrete Pump: Truck Mount With Boom Attachment Over 42 M	$93.36	**15J**	**11G**	**8X**
Power Equipment Operators	Concrete Pump: Truck Mount With Boom Attachment Up To 42m	$92.52	**15J**	**11G**	**8X**
Power Equipment Operators	Conveyors	$91.81	**15J**	**11G**	**8X**
Power Equipment Operators	Cranes Friction: 200 tons and over	$94.85	**7A**	**11H**	**8X**
Power Equipment Operators	Cranes, A-frame: 10 tons and under	$86.60	**7A**	**11H**	**8X**
Power Equipment Operators	Cranes: 100 tons through 199 tons, or 150' of boom (including jib with attachments)	$92.98	**7A**	**11H**	**8X**
Power Equipment Operators	Cranes: 20 tons through 44 tons with attachments	$91.25	**7A**	**11H**	**8X**
Power Equipment Operators	Cranes: 200 tons- 299 tons, or 250' of boom	$93.95	**7A**	**11H**	**8X**

Provided to Builders Exchange of WA, Inc. For usage Conditions Agreement see www.bxwa.com - Always Verify Scal

	including jib with attachments				
Power Equipment Operators	Cranes: 300 tons and over or 300' of boom including jib with attachments	$94.85	**7A**	**11H**	**8X**
Power Equipment Operators	Cranes: 45 tons through 99 tons, under 150' of boom(including jib with attachments)	$92.08	**7A**	**11H**	**8X**
Power Equipment Operators	Cranes: Friction cranes through 199 tons	$93.95	**7A**	**11H**	**8X**
Power Equipment Operators	Cranes: through 19 tons with attachments, a-frame over 10 tons	$90.55	**7A**	**11H**	**8X**
Power Equipment Operators	Crusher	$92.52	**15J**	**11G**	**8X**
Power Equipment Operators	Deck Engineer/Deck Winches (power)	$92.52	**15J**	**11G**	**8X**
Power Equipment Operators	Derricks, On Building Work	$92.08	**7A**	**11H**	**8X**
Power Equipment Operators	Dozers D-9 & Under	$91.81	**15J**	**11G**	**8X**
Power Equipment Operators	Drill Oilers: Auger Type, Truck Or Crane Mount	$91.81	**15J**	**11G**	**8X**
Power Equipment Operators	Drilling Machine	$94.30	**15J**	**11G**	**8X**

Provided to Builders Exchange of WA, Inc. For usage Conditions Agreement see www.bxwa.com - Always Verify Scal

Power Equipment Operators	Elevator and man-lift: permanent and shaft type	$87.77	**15J**	**11G**	**8X**
Power Equipment Operators	Finishing Machine, Bidwell And Gamaco & Similar Equipment	$92.52	**15J**	**11G**	**8X**
Power Equipment Operators	Forklift: 3000 lbs and over with attachments	$91.81	**15J**	**11G**	**8X**
Power Equipment Operators	Forklifts: under 3000 lbs. with attachments	$87.77	**15J**	**11G**	**8X**
Power Equipment Operators	Grade Engineer: Using Blue Prints, Cut Sheets, Etc	$92.52	**15J**	**11G**	**8X**
Power Equipment Operators	Gradechecker/Stakeman	$87.77	**15J**	**11G**	**8X**
Power Equipment Operators	Guardrail Punch	$92.52	**15J**	**11G**	**8X**
Power Equipment Operators	Hard Tail End Dump Articulating Off- Road Equipment 45 Yards. & Over	$93.36	**15J**	**11G**	**8X**
Power Equipment Operators	Hard Tail End Dump Articulating Off-road Equipment Under 45 Yards	$92.52	**15J**	**11G**	**8X**
Power Equipment Operators	Horizontal/Directional Drill Locator	$91.81	**15J**	**11G**	**8X**

Provided to Builders Exchange of WA, Inc. For usage Conditions Agreement see www.bxwa.com - Always Verify Scal

Power Equipment Operators	Horizontal/Directional Drill Operator	$92.52	**15J**	**11G**	**8X**
Power Equipment Operators	Hydralifts/Boom Trucks Over 10 Tons	$90.55	**7A**	**11H**	**8X**
Power Equipment Operators	Hydralifts/boom trucks: 10 tons and under	$86.60	**7A**	**11H**	**8X**
Power Equipment Operators	Leverman	$95.28	**15J**	**11G**	**8X**
Power Equipment Operators	Loader, Overhead, 6 Yards. But Not Including 8 Yards	$93.36	**15J**	**11G**	**8X**
Power Equipment Operators	Loaders, Overhead Under 6 Yards	$92.52	**15J**	**11G**	**8X**
Power Equipment Operators	Loaders, Plant Feed	$92.52	**15J**	**11G**	**8X**
Power Equipment Operators	Loaders: Elevating Type Belt	$91.81	**15J**	**11G**	**8X**
Power Equipment Operators	Locomotives, All	$92.52	**15J**	**11G**	**8X**
Power Equipment Operators	Material Transfer Device	$92.52	**15J**	**11G**	**8X**
Power Equipment Operators	Mechanics: All (Leadmen - $0.50 per hour over mechanic)	$94.30	**15J**	**11G**	**8X**
Power Equipment Operators	Motor Patrol Graders	$93.36	**15J**	**11G**	**8X**

Provided to Builders Exchange of WA, Inc. For usage Conditions Agreement see www.bxwa.com - Always Verify Scal

Power Equipment Operators	Mucking Machine, Mole, Tunnel Drill, Boring, Road Header And/or Shield	$93.36	**15J**	**11G**	**8X**
Power Equipment Operators	Oil Distributors, Blower Distribution & Mulch Seeding Operator	$87.77	**15J**	**11G**	**8X**
Power Equipment Operators	Outside Hoists (Elevators and Manlifts), Air Tuggers, Strato	$91.81	**15J**	**11G**	**8X**
Power Equipment Operators	Overhead, bridge type Crane: 20 tons through 44 tons	$91.25	**7A**	**11H**	**8X**
Power Equipment Operators	Overhead, bridge type: 100 tons and over	$92.98	**7A**	**11H**	**8X**
Power Equipment Operators	Overhead, bridge type: 45 tons through 99 tons	$92.08	**7A**	**11H**	**8X**
Power Equipment Operators	Pavement Breaker	$87.77	**15J**	**11G**	**8X**
Power Equipment Operators	Pile Driver (other Than Crane Mount)	$92.52	**15J**	**11G**	**8X**
Power Equipment Operators	Plant Oiler - Asphalt, Crusher	$91.81	**15J**	**11G**	**8X**
Power Equipment Operators	Posthole Digger, Mechanical	$87.77	**15J**	**11G**	**8X**
Power Equipment Operators	Power Plant	$87.77	**15J**	**11G**	**8X**

Provided to Builders Exchange of WA, Inc. For usage Conditions Agreement see www.bxwa.com - Always Verify Scal

Power Equipment Operators	Pumps - Water	$87.77	**15J**	**11G**	**8X**
Power Equipment Operators	Quad 9, Hd 41, D10 And Over	$93.36	**15J**	**11G**	**8X**
Power Equipment Operators	Quick Tower: no cab, under 100 feet in height base to boom	$92.52	**15J**	**11G**	**8X**
Power Equipment Operators	Remote Control Operator On Rubber Tired Earth Moving Equipment	$93.36	**15J**	**11G**	**8X**
Power Equipment Operators	Rigger and Bellman	$86.60	**7A**	**11H**	**8X**
Power Equipment Operators	Rigger/Signal Person, Bellman(Certified)	$90.55	**7A**	**11H**	**8X**
Power Equipment Operators	Rollagon	$93.36	**15J**	**11G**	**8X**
Power Equipment Operators	Roller, Other Than Plant Mix	$87.77	**15J**	**11G**	**8X**
Power Equipment Operators	Roller, Plant Mix Or Multi-lift Materials	$91.81	**15J**	**11G**	**8X**
Power Equipment Operators	Roto-mill, Roto-grinder	$92.52	**15J**	**11G**	**8X**
Power Equipment Operators	Saws - Concrete	$91.81	**15J**	**11G**	**8X**
Power Equipment Operators	Scraper, Self Propelled Under 45 Yards	$92.52	**15J**	**11G**	**8X**

Provided to Builders Exchange of WA, Inc. For usage Conditions Agreement see www.bxwa.com - Always Verify Scal

Power Equipment Operators	Scrapers - Concrete & Carry All	$91.81	**15J**	**11G**	**8X**
Power Equipment Operators	Scrapers, Self-propelled: 45 Yards And Over	$93.36	**15J**	**11G**	**8X**
Power Equipment Operators	Service Engineers: Equipment	$91.81	**15J**	**11G**	**8X**
Power Equipment Operators	Shotcrete/Gunite Equipment	$87.77	**15J**	**11G**	**8X**
Power Equipment Operators	Shovel, Excavator, Backhoe, Tractors Under 15 Metric Tons	$91.81	**15J**	**11G**	**8X**
Power Equipment Operators	Shovel, Excavator, Backhoe: Over 30 Metric Tons To 50 Metric Tons	$93.36	**15J**	**11G**	**8X**
Power Equipment Operators	Shovel, Excavator, Backhoes, Tractors: 15 To 30 Metric Tons	$92.52	**15J**	**11G**	**8X**
Power Equipment Operators	Shovel, Excavator, Backhoes: Over 50 Metric Tons To 90 Metric Tons	$94.30	**15J**	**11G**	**8X**
Power Equipment Operators	Shovel, Excavator, Backhoes: Over 90 Metric Tons	$95.28	**15J**	**11G**	**8X**
Power Equipment Operators	Slipform Pavers	$93.36	**15J**	**11G**	**8X**

Provided to Builders Exchange of WA, Inc. For usage Conditions Agreement see www.bxwa.com - Always Verify Scal

Power Equipment Operators	Spreader, Topsider & Screedman	$93.36	**15J**	**11G**	**8X**
Power Equipment Operators	Subgrader Trimmer	$92.52	**15J**	**11G**	**8X**
Power Equipment Operators	Tower Bucket Elevators	$91.81	**15J**	**11G**	**8X**
Power Equipment Operators	Tower Crane: over 175' through 250' in height, base to boom	$93.95	**7A**	**11H**	**8X**
Power Equipment Operators	Tower crane: up to 175' in height base to boom	$92.98	**7A**	**11H**	**8X**
Power Equipment Operators	Tower Cranes: over 250' in height from base to boom	$94.85	**7A**	**11H**	**8X**
Power Equipment Operators	Transporters, All Track Or Truck Type	$93.36	**15J**	**11G**	**8X**
Power Equipment Operators	Trenching Machines	$91.81	**15J**	**11G**	**8X**
Power Equipment Operators	Truck Crane Oiler/Driver: 100 tons and over	$91.25	**7A**	**11H**	**8X**
Power Equipment Operators	Truck crane oiler/driver: under 100 tons	$90.55	**7A**	**11H**	**8X**
Power Equipment Operators	Truck Mount Portable Conveyor	$92.52	**15J**	**11G**	**8X**
Power Equipment Operators	Vac Truck (Vactor Guzzler, Hydro Excavator)	$92.52	**15J**	**11G**	**8X**

Provided to Builders Exchange of WA, Inc. For usage Conditions Agreement see www.bxwa.com - Always Verify Scal

Power Equipment Operators	Welder	$93.36	**15J**	**11G**	**8X**
Power Equipment Operators	Wheel Tractors, Farmall Type	$87.77	**15J**	**11G**	**8X**
Power Equipment Operators	Yo Yo Pay Dozer	$92.52	**15J**	**11G**	**8X**
Power Equipment Operators- Underground Sewer & Water	Asphalt Plant Operators	$93.36	**15J**	**11G**	**8X**
Power Equipment Operators- Underground Sewer & Water	Assistant Engineer	$87.77	**15J**	**11G**	**8X**
Power Equipment Operators- Underground Sewer & Water	Barrier Machine (zipper)	$92.52	**15J**	**11G**	**8X**
Power Equipment Operators- Underground Sewer & Water	Batch Plant Operator, Concrete	$92.52	**15J**	**11G**	**8X**
Power Equipment Operators- Underground Sewer & Water	Boat Operator	$92.08	**7A**	**11H**	**8X**
Power Equipment Operators- Underground Sewer & Water	Bobcat	$87.77	**15J**	**11G**	**8X**
Power Equipment Operators- Underground Sewer & Water	Brokk - Remote Demolition Equipment	$87.77	**15J**	**11G**	**8X**

Provided to Builders Exchange of WA, Inc. For usage Conditions Agreement see www.bxwa.com - Always Verify Scal

Power Equipment Operators- Underground Sewer & Water	Brooms	$87.77	**15J**	**11G**	**8X**
Power Equipment Operators- Underground Sewer & Water	Bump Cutter	$92.52	**15J**	**11G**	**8X**
Power Equipment Operators- Underground Sewer & Water	Cableways	$93.36	**15J**	**11G**	**8X**
Power Equipment Operators- Underground Sewer & Water	Chipper	$92.52	**15J**	**11G**	**8X**
Power Equipment Operators- Underground Sewer & Water	Compressor	$87.77	**15J**	**11G**	**8X**
Power Equipment Operators- Underground Sewer & Water	Concrete Finish Machine - Laser Screed	$87.77	**15J**	**11G**	**8X**
Power Equipment Operators- Underground Sewer & Water	Concrete Pump - Mounted Or Trailer High Pressure Line Pump, Pump High Pressure	$91.81	**15J**	**11G**	**8X**
Power Equipment Operators- Underground Sewer & Water	Concrete Pump: Truck Mount With Boom Attachment Over 42 M	$93.36	**15J**	**11G**	**8X**

Provided to Builders Exchange of WA, Inc. For usage Conditions Agreement see www.bxwa.com - Always Verify Scal

Power Equipment Operators- Underground Sewer & Water	Concrete Pump: Truck Mount With Boom Attachment Up To 42m	$92.52	**15J**	**11G**	**8X**
Power Equipment Operators- Underground Sewer & Water	Conveyors	$91.81	**15J**	**11G**	**8X**
Power Equipment Operators- Underground Sewer & Water	Cranes Friction: 200 tons and over	$94.85	**7A**	**11H**	**8X**
Power Equipment Operators- Underground Sewer & Water	Cranes, A-frame: 10 tons and under	$86.60	**7A**	**11H**	**8X**
Power Equipment Operators- Underground Sewer & Water	Cranes: 100 tons through 199 tons, or 150' of boom (including jib with attachments)	$92.98	**7A**	**11H**	**8X**
Power Equipment Operators- Underground Sewer & Water	Cranes: 20 tons through 44 tons with attachments	$91.25	**7A**	**11H**	**8X**
Power Equipment Operators- Underground Sewer & Water	Cranes: 200 tons- 299 tons, or 250' of boom including jib with attachments	$93.95	**7A**	**11H**	**8X**
Power Equipment Operators- Underground Sewer & Water	Cranes: 300 tons and over or 300' of boom including jib with attachments	$94.85	**7A**	**11H**	**8X**
Power Equipment Operators- Underground	Cranes: 45 tons through 99 tons, under 150' of	$92.08	**7A**	**11H**	**8X**

Provided to Builders Exchange of WA, Inc. For usage Conditions Agreement see www.bxwa.com - Always Verify Scal

Sewer & Water	boom(including jib with attachments)				
Power Equipment Operators- Underground Sewer & Water	Cranes: Friction cranes through 199 tons	$93.95	**7A**	**11H**	**8X**
Power Equipment Operators- Underground Sewer & Water	Cranes: through 19 tons with attachments, a-frame over 10 tons	$90.55	**7A**	**11H**	**8X**
Power Equipment Operators- Underground Sewer & Water	Crusher	$92.52	**15J**	**11G**	**8X**
Power Equipment Operators- Underground Sewer & Water	Deck Engineer/Deck Winches (power)	$92.52	**15J**	**11G**	**8X**
Power Equipment Operators- Underground Sewer & Water	Derricks, On Building Work	$92.08	**7A**	**11H**	**8X**
Power Equipment Operators- Underground Sewer & Water	Dozers D-9 & Under	$91.81	**15J**	**11G**	**8X**
Power Equipment Operators- Underground Sewer & Water	Drill Oilers: Auger Type, Truck Or Crane Mount	$91.81	**15J**	**11G**	**8X**
Power Equipment Operators- Underground Sewer & Water	Drilling Machine	$94.30	**15J**	**11G**	**8X**

Provided to Builders Exchange of WA, Inc. For usage Conditions Agreement see www.bxwa.com - Always Verify Scal

Power Equipment Operators- Underground Sewer & Water	Elevator and man-lift: permanent and shaft type	$87.77	**15J**	**11G**	**8X**
Power Equipment Operators- Underground Sewer & Water	Finishing Machine, Bidwell And Gamaco & Similar Equipment	$92.52	**15J**	**11G**	**8X**
Power Equipment Operators- Underground Sewer & Water	Forklift: 3000 lbs and over with attachments	$91.81	**15J**	**11G**	**8X**
Power Equipment Operators- Underground Sewer & Water	Forklifts: under 3000 lbs. with attachments	$87.77	**15J**	**11G**	**8X**
Power Equipment Operators- Underground Sewer & Water	Grade Engineer: Using Blue Prints, Cut Sheets, Etc	$92.52	**15J**	**11G**	**8X**
Power Equipment Operators- Underground Sewer & Water	Gradechecker/Stakeman	$87.77	**15J**	**11G**	**8X**
Power Equipment Operators- Underground Sewer & Water	Guardrail Punch	$92.52	**15J**	**11G**	**8X**
Power Equipment Operators- Underground Sewer & Water	Hard Tail End Dump Articulating Off- Road Equipment 45 Yards. & Over	$93.36	**15J**	**11G**	**8X**

Provided to Builders Exchange of WA, Inc. For usage Conditions Agreement see www.bxwa.com - Always Verify Scal

Power Equipment Operators- Underground Sewer & Water	Hard Tail End Dump Articulating Off-road Equipment Under 45 Yards	$92.52	**15J**	**11G**	**8X**
Power Equipment Operators- Underground Sewer & Water	Horizontal/Directional Drill Locator	$91.81	**15J**	**11G**	**8X**
Power Equipment Operators- Underground Sewer & Water	Horizontal/Directional Drill Operator	$92.52	**15J**	**11G**	**8X**
Power Equipment Operators- Underground Sewer & Water	Hydralifts/boom trucks: 10 tons and under	$86.60	**7A**	**11H**	**8X**
Power Equipment Operators- Underground Sewer & Water	Hydralifts/boom trucks: over 10 tons	$90.55	**7A**	**11H**	**8X**
Power Equipment Operators- Underground Sewer & Water	Leverman	$95.28	**15J**	**11G**	**8X**
Power Equipment Operators- Underground Sewer & Water	Loader, Overhead, 6 Yards. But Not Including 8 Yards	$93.36	**15J**	**11G**	**8X**
Power Equipment Operators- Underground Sewer & Water	Loaders, Overhead Under 6 Yards	$92.52	**15J**	**11G**	**8X**

Provided to Builders Exchange of WA, Inc. For usage Conditions Agreement see www.bxwa.com - Always Verify Scal

Power Equipment Operators- Underground Sewer & Water	Loaders, Plant Feed	$92.52	**15J**	**11G**	**8X**
Power Equipment Operators- Underground Sewer & Water	Loaders: Elevating Type Belt	$91.81	**15J**	**11G**	**8X**
Power Equipment Operators- Underground Sewer & Water	Locomotives, All	$92.52	**15J**	**11G**	**8X**
Power Equipment Operators- Underground Sewer & Water	Material Transfer Device	$92.52	**15J**	**11G**	**8X**
Power Equipment Operators- Underground Sewer & Water	Mechanics: All (Leadmen - $0.50 per hour over mechanic)	$94.30	**15J**	**11G**	**8X**
Power Equipment Operators- Underground Sewer & Water	Motor Patrol Graders	$93.36	**15J**	**11G**	**8X**
Power Equipment Operators- Underground Sewer & Water	Mucking Machine, Mole, Tunnel Drill, Boring, Road Header And/or Shield	$93.36	**15J**	**11G**	**8X**
Power Equipment Operators- Underground Sewer & Water	Oil Distributors, Blower Distribution & Mulch Seeding Operator	$87.77	**15J**	**11G**	**8X**
Power Equipment Operators- Underground Sewer & Water	Outside Hoists (Elevators and Manlifts), Air Tuggers, Strato	$91.81	**15J**	**11G**	**8X**

Provided to Builders Exchange of WA, Inc. For usage Conditions Agreement see www.bxwa.com - Always Verify Scal

Power Equipment Operators- Underground Sewer & Water	Overhead, bridge type Crane: 20 tons through 44 tons	$91.25	**7A**	**11H**	**8X**
Power Equipment Operators- Underground Sewer & Water	Overhead, bridge type: 100 tons and over	$92.98	**7A**	**11H**	**8X**
Power Equipment Operators- Underground Sewer & Water	Overhead, bridge type: 45 tons through 99 tons	$92.08	**7A**	**11H**	**8X**
Power Equipment Operators- Underground Sewer & Water	Pavement Breaker	$87.77	**15J**	**11G**	**8X**
Power Equipment Operators- Underground Sewer & Water	Pile Driver (other Than Crane Mount)	$92.52	**15J**	**11G**	**8X**
Power Equipment Operators- Underground Sewer & Water	Plant Oiler - Asphalt, Crusher	$91.81	**15J**	**11G**	**8X**
Power Equipment Operators- Underground Sewer & Water	Posthole Digger, Mechanical	$87.77	**15J**	**11G**	**8X**
Power Equipment Operators- Underground Sewer & Water	Power Plant	$87.77	**15J**	**11G**	**8X**
Power Equipment Operators- Underground Sewer & Water	Pumps - Water	$87.77	**15J**	**11G**	**8X**

Provided to Builders Exchange of WA, Inc. For usage Conditions Agreement see www.bxwa.com - Always Verify Scal

Power Equipment Operators- Underground Sewer & Water	Quad 9, Hd 41, D10 And Over	$93.36	**15J**	**11G**	**8X**
Power Equipment Operators- Underground Sewer & Water	Quick Tower: no cab, under 100 feet in height base to boom	$92.52	**15J**	**11G**	**8X**
Power Equipment Operators- Underground Sewer & Water	Remote Control Operator On Rubber Tired Earth Moving Equipment	$93.36	**15J**	**11G**	**8X**
Power Equipment Operators- Underground Sewer & Water	Rigger and Bellman	$86.60	**7A**	**11H**	**8X**
Power Equipment Operators- Underground Sewer & Water	Rigger/Signal Person, Bellman(Certified)	$90.55	**7A**	**11H**	**8X**
Power Equipment Operators- Underground Sewer & Water	Rollagon	$93.36	**15J**	**11G**	**8X**
Power Equipment Operators- Underground Sewer & Water	Roller, Other Than Plant Mix	$87.77	**15J**	**11G**	**8X**
Power Equipment Operators- Underground Sewer & Water	Roller, Plant Mix Or Multi-lift Materials	$91.81	**15J**	**11G**	**8X**
Power Equipment Operators- Underground Sewer & Water	Roto-mill, Roto-grinder	$92.52	**15J**	**11G**	**8X**

Provided to Builders Exchange of WA, Inc. For usage Conditions Agreement see www.bxwa.com - Always Verify Scal

Power Equipment Operators- Underground Sewer & Water	Saws - Concrete	$91.81	**15J**	**11G**	**8X**
Power Equipment Operators- Underground Sewer & Water	Scraper, Self Propelled Under 45 Yards	$92.52	**15J**	**11G**	**8X**
Power Equipment Operators- Underground Sewer & Water	Scrapers - Concrete & Carry All	$91.81	**15J**	**11G**	**8X**
Power Equipment Operators- Underground Sewer & Water	Scrapers, Self-propelled: 45 Yards And Over	$93.36	**15J**	**11G**	**8X**
Power Equipment Operators- Underground Sewer & Water	Shotcrete/Gunite Equipment	$87.77	**15J**	**11G**	**8X**
Power Equipment Operators- Underground Sewer & Water	Shovel, Excavator, Backhoe, Tractors Under 15 Metric Tons	$91.81	**15J**	**11G**	**8X**
Power Equipment Operators- Underground Sewer & Water	Shovel, Excavator, Backhoe: Over 30 Metric Tons To 50 Metric Tons	$93.36	**15J**	**11G**	**8X**
Power Equipment Operators- Underground Sewer & Water	Shovel, Excavator, Backhoes, Tractors: 15 To 30 Metric Tons	$92.52	**15J**	**11G**	**8X**
Power Equipment Operators- Underground Sewer & Water	Shovel, Excavator, Backhoes: Over 50 Metric Tons To 90 Metric Tons	$94.30	**15J**	**11G**	**8X**

Provided to Builders Exchange of WA, Inc. For usage Conditions Agreement see www.bxwa.com - Always Verify Scal

Power Equipment Operators- Underground Sewer & Water	Shovel, Excavator, Backhoes: Over 90 Metric Tons	$95.28	**15J**	**11G**	**8X**
Power Equipment Operators- Underground Sewer & Water	Slipform Pavers	$93.36	**15J**	**11G**	**8X**
Power Equipment Operators- Underground Sewer & Water	Spreader, Topsider & Screedman	$93.36	**15J**	**11G**	**8X**
Power Equipment Operators- Underground Sewer & Water	Subgrader Trimmer	$92.52	**15J**	**11G**	**8X**
Power Equipment Operators- Underground Sewer & Water	Tower Bucket Elevators	$91.81	**15J**	**11G**	**8X**
Power Equipment Operators- Underground Sewer & Water	Tower Crane: over 175' through 250' in height, base to boom	$93.95	**7A**	**11H**	**8X**
Power Equipment Operators- Underground Sewer & Water	Tower crane: up to 175' in height base to boom	$92.98	**7A**	**11H**	**8X**
Power Equipment Operators- Underground Sewer & Water	Tower Cranes: over 250' in height from base to boom	$94.85	**7A**	**11H**	**8X**
Power Equipment Operators- Underground Sewer & Water	Transporters, All Track Or Truck Type	$93.36	**15J**	**11G**	**8X**

Provided to Builders Exchange of WA, Inc. For usage Conditions Agreement see www.bxwa.com - Always Verify Scal

Power Equipment Operators- Underground Sewer & Water	Trenching Machines	$91.81	**15J**	**11G**	**8X**
Power Equipment Operators- Underground Sewer & Water	Truck Crane Oiler/Driver: 100 tons and over	$91.25	**7A**	**11H**	**8X**
Power Equipment Operators- Underground Sewer & Water	Truck crane oiler/driver: under 100 tons	$90.55	**7A**	**11H**	**8X**
Power Equipment Operators- Underground Sewer & Water	Truck Mount Portable Conveyor	$92.52	**15J**	**11G**	**8X**
Power Equipment Operators- Underground Sewer & Water	Vac Truck (Vactor Guzzler, Hydro Excavator)	$92.52	**15J**	**11G**	**8X**
Power Equipment Operators- Underground Sewer & Water	Welder	$93.36	**15J**	**11G**	**8X**
Power Equipment Operators- Underground Sewer & Water	Wheel Tractors, Farmall Type	$87.77	**15J**	**11G**	**8X**
Power Equipment Operators- Underground Sewer & Water	Yo Yo Pay Dozer	$92.52	**15J**	**11G**	**8X**
Power Line Clearance Tree Trimmers	Journey Level In Charge	$69.62	**5A**	**4A**	

Provided to Builders Exchange of WA, Inc. For usage Conditions Agreement see www.bxwa.com - Always Verify Scal

Power Line Clearance Tree Trimmers	Spray Person	$65.89	**5A**	**4A**
Power Line Clearance Tree Trimmers	Tree Equipment Operator	$69.62	**5A**	**4A**
Power Line Clearance Tree Trimmers	Tree Trimmer	$62.19	**5A**	**4A**
Power Line Clearance Tree Trimmers	Tree Trimmer Groundperson	$45.93	**5A**	**4A**
Refrigeration & Air Conditioning Mechanics	Journey Level	$100.71	**5A**	**1G**
Residential Brick Mason	Journey Level	$22.73		**1**
Residential Carpenters	Journey Level	$37.17		**1**
Residential Cement Masons	Journey Level	$81.36	**15J**	**4U**
Residential Drywall Applicators	Journey Level	$51.52	**15J**	**4C**
Residential Drywall Tapers	Journey Level	$81.31	**5P**	**1E**
Residential Electricians	Journey Level	$48.80		**1**
Residential Glaziers	Journey Level	$33.75		**1**
Residential Insulation Applicators	Journey Level	$37.07		**1**
Residential Laborers	Journey Level	$28.78		**1**
Residential Marble Setters	Journey Level	$39.71		**1**

Provided to Builders Exchange of WA, Inc. For usage Conditions Agreement see www.bxwa.com - Always Verify Scal

Residential Painters	Journey Level	$30.60		**1**
Residential Plumbers & Pipefitters	Journey Level	$51.38		**1**
Residential Refrigeration & Air Conditioning Mechanics	Journey Level	$107.92	**7F**	**1E**
Residential Sheet Metal Workers	Journey Level	$107.92	**7F**	**1E**
Residential Soft Floor Layers	Journey Level	$49.91	**15J**	**4C**
Residential Sprinkler Fitters (Fire Protection)	Journey Level	$61.85		**1**
Residential Stone Masons	Journey Level	$39.71		**1**
Residential Terrazzo Workers	Journey Level	$17.13		**1**
Residential Terrazzo/Tile Finishers	Journey Level	$27.90		**1**
Residential Tile Setters	Journey Level	$21.38		**1**
Roofers	Journey Level	$70.70	**5A**	**3H**
Roofers	Using Irritable Bituminous Materials	$74.15	**5A**	**3H**
Sheet Metal Workers	Journey Level (Field or Shop)	$107.92	**7F**	**1E**

Provided to Builders Exchange of WA, Inc. For usage Conditions Agreement see www.bxwa.com - Always Verify Scal

Shipbuilding & Ship Repair	New Construction Boilermaker	$61.07	**7X**	**4J**
Shipbuilding & Ship Repair	New Construction Carpenter	$51.85	**7X**	**4J**
Shipbuilding & Ship Repair	New Construction Crane Operator	$44.29	**7V**	**1**
Shipbuilding & Ship Repair	New Construction Electrician	$61.12	**7X**	**4J**
Shipbuilding & Ship Repair	New Construction Heat & Frost Insulator	$96.42	**15H**	**11C**
Shipbuilding & Ship Repair	New Construction Laborer	$60.73	**7X**	**4J**
Shipbuilding & Ship Repair	New Construction Machinist	$60.93	**7X**	**4J**
Shipbuilding & Ship Repair	New Construction Operating Engineer	$44.29	**7V**	**1**
Shipbuilding & Ship Repair	New Construction Painter	$60.93	**7X**	**4J**
Shipbuilding & Ship Repair	New Construction Pipefitter	$61.21	**7X**	**4J**
Shipbuilding & Ship Repair	New Construction Rigger	$61.07	**7X**	**4J**
Shipbuilding & Ship Repair	New Construction Sheet Metal	$60.94	**7X**	**4J**
Shipbuilding & Ship Repair	New Construction Shipwright	$51.85	**7X**	**4J**

Provided to Builders Exchange of WA, Inc. For usage Conditions Agreement see www.bxwa.com - Always Verify Scal

Shipbuilding & Ship Repair	New Construction Warehouse/Teamster	$44.29	**7V**	**1**
Shipbuilding & Ship Repair	New Construction Welder / Burner	$61.07	**7X**	**4J**
Shipbuilding & Ship Repair	Ship Repair Boilermaker	$61.07	**7X**	**4J**
Shipbuilding & Ship Repair	Ship Repair Carpenter	$51.85	**7X**	**4J**
Shipbuilding & Ship Repair	Ship Repair Crane Operator	$45.06	**7Y**	**4K**
Shipbuilding & Ship Repair	Ship Repair Electrician	$61.12	**7X**	**4J**
Shipbuilding & Ship Repair	Ship Repair Heat & Frost Insulator	$96.42	**15H**	**11C**
Shipbuilding & Ship Repair	Ship Repair Laborer	$60.73	**7X**	**4J**
Shipbuilding & Ship Repair	Ship Repair Machinist	$60.93	**7X**	**4J**
Shipbuilding & Ship Repair	Ship Repair Operating Engineer	$45.06	**7Y**	**4K**
Shipbuilding & Ship Repair	Ship Repair Painter	$60.93	**7X**	**4J**
Shipbuilding & Ship Repair	Ship Repair Pipefitter	$61.21	**7X**	**4J**
Shipbuilding & Ship Repair	Ship Repair Rigger	$61.07	**7X**	**4J**
Shipbuilding & Ship Repair	Ship Repair Sheet Metal	$60.94	**7X**	**4J**
Shipbuilding & Ship Repair	Ship Repair Shipwright	$51.85	**7X**	**4J**

Provided to Builders Exchange of WA, Inc. For usage Conditions Agreement see www.bxwa.com - Always Verify Scal

Shipbuilding & Ship Repair	Ship Repair Warehouse / Teamster	$45.06	**7Y**	**4K**	
Sign Makers & Installers (Electrical)	Sign Installer	$26.56		**1**	
Sign Makers & Installers (Electrical)	Sign Maker	$20.50		**1**	
Sign Makers & Installers (Non-Electrical)	Sign Installer	$22.56		**1**	
Sign Makers & Installers (Non-Electrical)	Sign Maker	$20.50		**1**	
Soft Floor Layers	Journey Level	$63.29	**15J**	**4C**	
Solar Controls For Windows	Journey Level	$17.13		**1**	
Sprinkler Fitters (Fire Protection)	Journey Level	$104.44	**5C**	**1X**	
Stage Rigging Mechanics (Non Structural)	Journey Level	$17.13		**1**	
Stone Masons	Journey Level	$76.07	**7E**	**1N**	
Street And Parking Lot Sweeper Workers	Journey Level	$17.13		**1**	
Surveyors	Assistant Construction Site Surveyor	$90.55	**7A**	**11H**	**8X**
Surveyors	Chainman	$86.60	**7A**	**11H**	**8X**

Provided to Builders Exchange of WA, Inc. For usage Conditions Agreement see www.bxwa.com - Always Verify Scal

Surveyors	Construction Site Surveyor	$92.08	**7A**	**11H**	**8X**
Surveyors	Drone Operator (when used in conjunction with survey work only)	$86.60	**7A**	**11H**	**8X**
Surveyors	Ground Penetrating Radar Operator	$86.60	**7A**	**11H**	**8X**
Telecommunication Technicians	Telecom Technician Journey Level	$62.05	**5B**	**1B**	
Telephone Line Construction - Outside	Cable Splicer	$42.62	**5A**	**2B**	
Telephone Line Construction - Outside	Hole Digger/Ground Person	$27.97	**5A**	**2B**	
Telephone Line Construction - Outside	Telephone Equipment Operator (Light)	$35.60	**5A**	**2B**	
Telephone Line Construction - Outside	Telephone Lineperson	$40.28	**5A**	**2B**	
Terrazzo Workers	Journey Level	$70.61	**7E**	**1N**	
Tile Setters	Journey Level	$68.61	**7E**	**1N**	
Tile, Marble & Terrazzo Finishers	Finisher	$59.44	**7E**	**1N**	
Traffic Control Stripers	All cleanup required in connection with traffic control stripers work (Group 1)	$95.41	**15L**	**1K**	

Provided to Builders Exchange of WA, Inc. For usage Conditions Agreement see www.bxwa.com - Always Verify Scal

Traffic Control Stripers	Handling, painting and installing of all car stops, stop signs and any other type sign (Group 2)	$62.69	**15L**	**1K**
Traffic Control Stripers	Installation of guard rail and posts and similar protective devices (Group 2)	$62.69	**15L**	**1K**
Traffic Control Stripers	Installation of parking gates, ticket spitters and other mechanical and automatic control devices (Group 2)	$62.69	**15L**	**1K**
Traffic Control Stripers	Installation of plastic metal or composition button, or lines used instead of paint (Group 1)	$95.41	**15L**	**1K**
Traffic Control Stripers	Line removal; chemical sand and hydro-blast, paint and button (Group 1)	$95.41	**15L**	**1K**
Traffic Control Stripers	Manufacturing and installation of all car stops and control devices and similar traffic regulators (Group 2)	$62.69	**15L**	**1K**
Traffic Control Stripers	Manufacturing, painting, stenciling, servicing, repairing, placing and removal of traffic safety	$62.69	**15L**	**1K**

Provided to Builders Exchange of WA, Inc. For usage Conditions Agreement see www.bxwa.com - Always Verify Scal

	and control devices/barricades (Group 2)				
Traffic Control Stripers	Painting and installing lines, arrows, bumpers, curbs, etc., on parking lots, air fields, highways, game courts (Group 1)	$95.41	**15L**	**1K**	
Traffic Control Stripers	Preparation and maintenance of all surfaces (Group 1)	$95.41	**15L**	**1K**	
Traffic Control Stripers	Seal coating, slurry coating and other surface protection (Group 2)	$62.69	**15L**	**1K**	
Truck Drivers	Asphalt Mix Over 16 Yards	$82.95	**15J**	**11M**	**8L**
Truck Drivers	Asphalt Mix To 16 Yards	$82.11	**15J**	**11M**	**8L**
Truck Drivers	Dump Truck	$82.11	**15J**	**11M**	**8L**
Truck Drivers	Dump Truck & Trailer	$82.95	**15J**	**11M**	**8L**
Truck Drivers	Other Trucks	$82.95	**15J**	**11M**	**8L**
Truck Drivers - Ready Mix	Transit Mix	$82.95	**15J**	**11M**	**8L**
Well Drillers & Irrigation Pump Installers	Irrigation Pump Installer	$17.13		**1**	
Well Drillers & Irrigation Pump Installers	Oiler	$17.13		**1**	

Provided to Builders Exchange of WA, Inc. For usage Conditions Agreement see www.bxwa.com - Always Verify Scal

Well Drillers & Irrigation Pump Installers	Well Driller	$19.01	**1**

Provided to Builders Exchange of WA, Inc. For usage Conditions Agreement see www.bxwa.com - Always Verify Scal

Washington State Department of Labor and Industries
Policy Statement
(Regarding the Production of "Standard" or "Non-standard" Items)

Below is the department's (State L&I's) list of criteria to be used in determining whether a prefabricated item is "standard" or "non-standard". For items not appearing on WSDOT's predetermined list, these criteria shall be used by the Contractor (and the Contractor's subcontractors, agents to subcontractors, suppliers, manufacturers, and fabricators) to determine coverage under RCW 39.12. The production, in the State of Washington, of non-standard items is covered by RCW 39.12, and the production of standard items is not. The production of any item outside the State of Washington is not covered by RCW 39.12.

1. Is the item fabricated for a public works project? If not, it is not subject to RCW 39.12. If it is, go to question 2.

2. Is the item fabricated on the public works jobsite? If it is, the work is covered under RCW 39.12. If not, go to question 3.

3. Is the item fabricated in an assembly/fabrication plant set up for, and dedicated primarily to, the public works project? If it is, the work is covered by RCW 39.12. If not, go to question 4.

4. Does the item require any assembly, cutting, modification or other fabrication by the supplier? If not, the work is not covered by RCW 39.12. If yes, go to question 5.

5. Is the prefabricated item intended for the public works project typically an inventory item which could reasonably be sold on the general market? If not, the work is covered by RCW 39.12. If yes, go to question 6.

6. Does the specific prefabricated item, generally defined as standard, have any unusual characteristics such as shape, type of material, strength requirements, finish, etc? If yes, the work is covered under RCW 39.12.

Any firm with questions regarding the policy, WSDOT's Predetermined List, or for determinations of covered and non-covered workers shall be directed to State L&I at (360) 902-5330.

Provided to Builders Exchange of WA, Inc. For usage Conditions Agreement see www.bxwa.com - Always Verify Scal

WSDOT's
Predetermined List for
Suppliers - Manufactures - Fabricator

Below is a list of potentially prefabricated items, originally furnished by WSDOT to Washington State Department of Labor and Industries, that may be considered non-standard and therefore covered by the prevailing wage law, RCW 39.12. Items marked with an X in the "YES" column should be considered to be non-standard and therefore covered by RCW 39.12. Items marked with an X in the "NO" column should be considered to be standard and therefore not covered. Of course, exceptions to this general list may occur, and in that case shall be evaluated according to the criteria described in State and L&I's policy statement.

	ITEM DESCRIPTION	YES	NO
1.	Metal rectangular frames, solid metal covers, herringbone grates, and bi-directional vaned grates for Catch Basin Types 1, 1L, 1P, and 2 and Concrete Inlets. See Std. Plans		X
2.	Metal circular frames (rings) and covers, circular grates, and prefabricated ladders for Manhole Types 1, 2, and 3, Drywell Types 1, 2, and 3 and Catch Basin Type 2. See Std. Plans		X
3.	Prefabricated steel grate supports and welded grates, metal frames and dual vaned grates, and Type 1, 2, and 3 structural tubing grates for Drop Inlets. See Std. Plans.		X
4.	Concrete Pipe - Plain Concrete pipe and reinforced concrete pipe Class 2 to 5 sizes smaller than 60 inch diameter.		X
5.	Concrete Pipe - Plain Concrete pipe and reinforced concrete pipe Class 2 to 5 sizes larger than 60 inch diameter.		X
6.	Corrugated Steel Pipe - Steel lock seam corrugated pipe for culverts and storm sewers, sizes 30 inch to 120 inches in diameter. May also be treated, 1 thru 5.		X
7.	Corrugated Aluminum Pipe - Aluminum lock seam corrugated pipe for culverts and storm sewers, sizes 30 inch to 120 inches in diameter. May also be treated, #5.		X

Provided to Builders Exchange of WA, Inc. For usage Conditions Agreement see www.bxwa.com - Always Verify Scal

	ITEM DESCRIPTION	YES	NO
8.	Anchor Bolts & Nuts - Anchor Bolts and Nuts, for mounting sign structures, luminaries and other items, shall be made from commercial bolt stock. See Contract Plans and Std. Plans for size and material type.		X
9.	Aluminum Pedestrian Handrail - Pedestrian handrail conforming to the type and material specifications set forth in the contract plans. Welding of aluminum shall be in accordance with Section 9-28.14(3).	X	
10.	Major Structural Steel Fabrication - Fabrication of major steel items such as trusses, beams, girders, etc., for bridges.	X	
11.	Minor Structural Steel Fabrication - Fabrication of minor steel Items such as special hangers, brackets, access doors for structures, access ladders for irrigation boxes, bridge expansion joint systems, etc., involving welding, cutting, punching and/or boring of holes. See Contact Plans for item description and shop drawings.	X	
12.	Aluminum Bridge Railing Type BP - Metal bridge railing conforming to the type and material specifications set forth in the Contract Plans. Welding of aluminum shall be in accordance with Section 9-28.14(3).		X
13.	Concrete Piling--Precast-Prestressed concrete piling for use as 55 and 70 ton concrete piling. Concrete to conform to Section 9-19.1 of Std. Spec..	X	
14.	Precast Manhole Types 1, 2, and 3 with cones, adjustment sections and flat top slabs. See Std. Plans.		X
15.	Precast Drywell Types 1, 2, and with cones and adjustment Sections. See Std. Plans.		X
16.	Precast Catch Basin - Catch Basin type 1, 1L, 1P, and 2 With adjustment sections. See Std. Plans.		X

Provided to Builders Exchange of WA, Inc. For usage Conditions Agreement see www.bxwa.com - Always Verify Scal

	ITEM DESCRIPTION	YES	NO
17.	Precast Concrete Inlet - with adjustment sections, See Std. Plans		X
18.	Precast Drop Inlet Type 1 and 2 with metal grate supports. See Std. Plans.		X
19.	Precast Grate Inlet Type 2 with extension and top units. See Std. Plans		X
20.	Metal frames, vaned grates, and hoods for Combination Inlets. See Std. Plans		X
21.	Precast Concrete Utility Vaults - Precast Concrete utility vaults of various sizes. Used for in ground storage of utility facilities and controls. See Contract Plans for size and construction requirements. Shop drawings are to be provided for approval prior to casting.		X
22.	Vault Risers - For use with Valve Vaults and Utilities Vaults.		X
23.	Valve Vault - For use with underground utilities. See Contract Plans for details.		X
24.	Precast Concrete Barrier - Precast Concrete Barrier for use as new barrier or may also be used as Temporary Concrete Barrier. Only new state approved barrier may be used as permanent barrier.		X
25.	Reinforced Earth Wall Panels – Reinforced Earth Wall Panels in size and shape as shown in the Plans. Fabrication plant has annual approval for methods and materials to be used. See Shop Drawing. Fabrication at other locations may be approved, after facilities inspection, contact HQ. Lab.	X	
26.	Precast Concrete Walls - Precast Concrete Walls - tilt-up wall panel in size and shape as shown in Plans. Fabrication plant has annual approval for methods and materials to be used	X	

Provided to Builders Exchange of WA, Inc. For usage Conditions Agreement see www.bxwa.com - Always Verify Scal

	ITEM DESCRIPTION	YES	NO
27.	Precast Railroad Crossings - Concrete Crossing Structure Slabs.	X	
28.	12, 18 and 26 inch Standard Precast Prestressed Girder – Standard Precast Prestressed Girder for use in structures. Fabricator plant has annual approval of methods and materials To be used. Shop Drawing to be provided for approval prior to casting girders. See Std. Spec. Section 6-02.3(25)A	X	
29.	Prestressed Concrete Girder Series 4-14 - Prestressed Concrete Girders for use in structures. Fabricator plant has annual approval of methods and materials to be used. Shop Drawing to be provided for approval prior to casting girders. See Std. Spec. Section 6-02.3(25)A.	X	
30.	Prestressed Tri-Beam Girder - Prestressed Tri-Beam Girders for use in structures. Fabricator plant has annual approval of methods and materials to be used. Shop Drawing to be provided for approval prior to casting girders. See Std. Spec. Section 6-02.3(25)A	X	
31.	Prestressed Precast Hollow-Core Slab – Precast Prestressed Hollow-core slab for use in structures. Fabricator plant has Annual approval of methods and materials to be used. Shop Drawing to be provided for approval prior to casting girders. See Std. Spec. Section 6-02.3(25)A.	X	
32.	Prestressed-Bulb Tee Girder - Bulb Tee Prestressed Girder for use in structures. Fabricator plant has annual approval of methods and materials to be used. Shop Drawing to be provided for approval prior to casting girders. See Std. Spec. Section 6-02.3(25)A	X	
33.	Monument Case and Cover See Std. Plan.		X

Provided to Builders Exchange of WA, Inc. For usage Conditions Agreement see www.bxwa.com - Always Verify Scal

	ITEM DESCRIPTION	YES	NO
34.	Cantilever Sign Structure - Cantilever Sign Structure fabricated from steel tubing meeting AASHTO-M-183. See Std. Plans, and Contract Plans for details. The steel structure shall be galvanized after fabrication in accordance with AASHTO-M-111.	X	
35.	Mono-tube Sign Structures - Mono-tube Sign Bridge fabricated to details shown in the Plans. Shop drawings for approval are required prior to fabrication.	X	
36.	Steel Sign Bridges - Steel Sign Bridges fabricated from steel tubing meeting AASHTO-M-138 for Aluminum Alloys. See Std. Plans, and Contract Plans for details. The steel Structure shall be galvanized after fabrication in accordance with AASHTO-M-111.	X	
37.	Steel Sign Post - Fabricated Steel Sign Posts as detailed in Std Plans. Shop drawings for approval are to be provided prior to fabrication		X
38.	Light Standard-Prestressed - Spun, prestressed, hollow concrete poles.	X	
39.	Light Standards - Lighting Standards for use on highway illumination systems, poles to be fabricated to conform with methods and materials as specified on Std. Plans. See Specia Provisions for pre-approved drawings.	X	
40.	Traffic Signal Standards - Traffic Signal Standards for use on highway and/or street signal systems. Standards to be fabricated to conform with methods and material as specified on Std. Plans. See Special Provisions for pre-approved drawings	X	
41.	Precast Concrete Sloped Mountable Curb (Single and Dual Faced) See Std. Plans.		X

Provided to Builders Exchange of WA, Inc. For usage Conditions Agreement see www.bxwa.com - Always Verify Scal

	ITEM DESCRIPTION	YES	NO
42.	Traffic Signs - Prior to approval of a Fabricator of Traffic Signs, the sources of the following materials must be submitted and approved for reflective sheeting, legend material, and luminum sheeting. **NOTE:** *** Fabrication inspection required. Only signs tagged "Fabrication Approved" by WSDOT Sign Fabrication Inspector to be installed.	X	X
		Custom Message	Std Signing Message
43.	Cutting & bending reinforcing steel		X
44.	Guardrail components	X	X
		Custom End Sec	Standard Sec
45.	Aggregates/Concrete mixes	Covered by WAC 296-127-018	
46.	Asphalt	Covered by WAC 296-127-018	
47.	Fiber fabrics		X
48.	Electrical wiring/components		X
49.	treated or untreated timber pile		X
50.	Girder pads (elastomeric bearing)	X	
51.	Standard Dimension lumber		X
52.	Irrigation components		X

Provided to Builders Exchange of WA, Inc. For usage Conditions Agreement see www.bxwa.com - Always Verify Scal

ITEM DESCRIPTION	YES	NO
53. Fencing materials		X
54. Guide Posts		X
55. Traffic Buttons		X
56. Epoxy		X
57. Cribbing		X
58. Water distribution materials		X
59. Steel "H" piles		X
60. Steel pipe for concrete pile casings, standard		X
Steel pipe for concrete pile casings, custom	X	
61. Steel pile tips, standard		X
62. Steel pile tips, custom	X	

Prefabricated items specifically produced for public works projects that are prefabricated in a county other than the county wherein the public works project is to be completed, the wage for the offsite prefabrication shall be the applicable prevailing wage for the county in which the actual prefabrication takes place.

It is the manufacturer of the prefabricated product to verify that the correct county wage rates are applied to work they perform.

See RCW 39.12.010
(The definition of "locality" in RCW 39.12.010(2) contains the phrase "wherein the physical work is being performed." The department interprets this phrase to mean the actual work site.

Provided to Builders Exchange of WA, Inc. For usage Conditions Agreement see www.bxwa.com - Always Verify Scal

WSDOT's List of State Occupations not applicable to Heavy and Highway Construction Projects

This project is subject to the state hourly minimum rates for wages and fringe benefits in the contract provisions, as provided by the state Department of Labor and Industries.
The following list of occupations, is comprised of those occupations that are not normally used in the construction of heavy and highway projects.
When considering job classifications for use and / or payment when bidding on, or building heavy and highway construction projects for, or administered by WSDOT, these Occupations will be excepted from the included "Washington State Prevailing Wage Rates For Public Work Contracts" documents.

- Building Service Employees
- Electrical Fixture Maintenance Workers
- Electricians - Motor Shop
- Heating Equipment Mechanics
- Industrial Engine and Machine Mechanics
- Industrial Power Vacuum Cleaners
- Inspection, Cleaning, Sealing of Water Systems by Remote Control
- Laborers - Underground Sewer & Water
- Machinists (Hydroelectric Site Work)
- Modular Buildings
- Playground & Park Equipment Installers
- Power Equipment Operators - Underground Sewer & Water
- Residential *** ALL ASSOCIATED RATES ***
- Sign Makers and Installers (Non-Electrical)
- Sign Makers and Installers (Electrical)
- Stage Rigging Mechanics (Non Structural)

The following occupations may be used only as outlined in the preceding text concerning "WSDOT's list for Suppliers - Manufacturers - Fabricators"

- Fabricated Precast Concrete Products
- Metal Fabrication (In Shop)

Definitions for the Scope of Work for prevailing wages may be found at the Washington State Department of Labor and Industries web site and in WAC Chapter 296-127.

Provided to Builders Exchange of WA, Inc. For usage Conditions Agreement see www.bxwa.com - Always Verify Scal

WAC 296-127-018 Agency filings affecting this section

Coverage and exemptions of workers involved in the production and delivery of gravel, concrete, asphalt, or similar materials.

(1) The materials covered under this section include but are not limited to: Sand, gravel, crushed rock, concrete, asphalt, or other similar materials.

(2) All workers, regardless of by whom employed, are subject to the provisions of chapter 39.12 RCW when they perform any or all of the following functions:

(a) They deliver or discharge any of the above-listed materials to a public works project site:

(i) At one or more point(s) directly upon the location where the material will be incorporated into the project; or

(ii) At multiple points at the project; or

(iii) Adjacent to the location and coordinated with the incorporation of those materials.

(b) They wait at or near a public works project site to perform any tasks subject to this section of the rule.

(c) They remove any materials from a public works construction site pursuant to contract requirements or specifications (e.g., excavated materials, materials from demolished structures, clean-up materials, etc.).

(d) They work in a materials production facility (e.g., batch plant, borrow pit, rock quarry, etc.,) which is established for a public works project for the specific, but not necessarily exclusive, purpose of supplying materials for the project.

(e) They deliver concrete to a public works site regardless of the method of incorporation.

(f) They assist or participate in the incorporation of any materials into the public works project.

Provided to Builders Exchange of WA, Inc. For usage Conditions Agreement see www.bxwa.com - Always Verify Scal

(3) All travel time that relates to the work covered under subsection (2) of this section requires the payment of prevailing wages. Travel time includes time spent waiting to load, loading, transporting, waiting to unload, and delivering materials. Travel time would include all time spent in travel in support of a public works project whether the vehicle is empty or full. For example, travel time spent returning to a supply source to obtain another load of material for use on a public works site or returning to the public works site to obtain another load of excavated material is time spent in travel that is subject to prevailing wage. Travel to a supply source, including travel from a public works site, to obtain materials for use on a private project would not be travel subject to the prevailing wage.

(4) Workers are not subject to the provisions of chapter 39.12 RCW when they deliver materials to a stockpile.

(a) A "stockpile" is defined as materials delivered to a pile located away from the site of incorporation such that the stockpiled materials must be physically moved from the stockpile and transported to another location on the project site in order to be incorporated into the project.

(b) A stockpile does not include any of the functions described in subsection (2)(a) through (f) of this section; nor does a stockpile include materials delivered or distributed to multiple locations upon the project site; nor does a stockpile include materials dumped at the place of incorporation, or adjacent to the location and coordinated with the incorporation.

(5) The applicable prevailing wage rate shall be determined by the locality in which the work is performed. Workers subject to subsection (2)(d) of this section, who produce such materials at an off-site facility shall be paid the applicable prevailing wage rates for the county in which the off-site facility is located. Workers subject to subsection (2) of this section, who deliver such materials to a public works project site shall be paid the applicable prevailing wage rates for the county in which the public works project is located.

[Statutory Authority: Chapter 39.12 RCW, RCW 43.22.051 and 43.22.270. 08-24-101, § 296-127-018, filed 12/2/08, effective 1/2/09. Statutory Authority: Chapters 39.04 and 39.12 RCW and RCW 43.22.270. 92-01-104 and 92-08-101, § 296-127-018, filed 12/18/91 and 4/1/92, effective 8/31/92.]

Provided to Builders Exchange of WA, Inc. For usage Conditions Agreement see www.bxwa.com - Always Verify Scal

****

Overtime Codes

Overtime calculations are based on the hourly rate actually paid to the worker. On public works projects, the hourly rate must be not less than the prevailing rate of wage minus the hourly rate of the cost of fringe benefits actually provided for the worker.

1. ALL HOURS WORKED IN EXCESS OF EIGHT (8) HOURS PER DAY OR FORTY (40) HOURS PER WEEK SHALL BE PAID AT ONE AND ONE-HALF TIMES THE HOURLY RATE OF WAGE.

B. All hours worked on Saturdays shall be paid at one and one-half times the hourly rate of wage. All hours worked on Sundays and holidays shall be paid at double the hourly rate of wage.

C. The first two (2) hours after eight (8) regular hours Monday through Friday and the first ten (10) hours on Saturday shall be paid at one and one-half times the hourly rate of wage. All other overtime hours and all hours worked on Sundays and holidays shall be paid at double the hourly rate of wage.

D. The first two (2) hours before or after a five-eight (8) hour workweek day or a four-ten (10) hour workweek day and the first eight (8) hours worked the next day after either workweek shall be paid at one and one-half times the hourly rate of wage. All additional hours worked and all worked on Sundays and holidays shall be paid at double the hourly rate of wage.

E. The first two (2) hours after eight (8) regular hours Monday through Friday and the first eight (8) hours on Saturday shall be paid at one and one-half times the hourly rate of wage. All other hours worked Monday through Saturday, and all hours worked on Sundays and holidays shall be paid at double the hourly rate of wage.

F. The first two (2) hours after eight (8) regular hours Monday through Friday and the first ten (10) hours on Saturday shall be paid at one and one-half times the hourly rate of wage. All other overtime hours worked, except Labor Day, shall be paid at double the hourly rate of wage. All hours worked on Labor Day shall be paid at three times the hourly rate of wage.

G. The first ten (10) hours worked on Saturdays and the first ten (10) hours worked on a fifth calendar weekday in a four-ten hour schedule, shall be paid at one and one-half times the hourly rate of wage. All hours worked in excess of ten (10) hours per day Monday through Saturday and all hours worked on Sundays and holidays shall be paid at double the hourly rate of wage.

H. All hours worked on Saturdays (except makeup days if work is lost due to inclement weather conditions or equipment breakdown) shall be paid at one and one-half times the hourly rate of wage. All hours worked Monday through Saturday over twelve (12) hours and all hours worked on Sundays and holidays shall be paid at double the hourly rate of wage.

I. All hours worked on Sundays and holidays shall also be paid at double the hourly rate of wage.

J. The first two (2) hours after eight (8) regular hours Monday through Friday and the first ten (10) hours on Saturday shall be paid at one and one-half times the hourly rate of wage. All hours worked over ten (10) hours Monday through Saturday, Sundays and holidays shall be paid at double the hourly rate of wage.

K. All hours worked on Saturdays and Sundays shall be paid at one and one-half times the hourly rate of wage. All hours worked on holidays shall be paid at double the hourly rate of wage.

M. All hours worked on Saturdays (except makeup days if work is lost due to inclement weather conditions) shall be paid at one and one-half times the hourly rate of wage. All hours worked on Sundays and holidays shall be paid at double the hourly rate of wage.

Provided to Builders Exchange of WA, Inc. For usage Conditions Agreement see www.bxwa.com - Always Verify Scal

Overtime Codes Continued

1. N. All hours worked on Saturdays (except makeup days) shall be paid at one and one-half times the hourly rate of wage. All hours worked on Sundays and holidays shall be paid at double the hourly rate of wage.

O. The first ten (10) hours worked on Saturday shall be paid at one and one-half times the hourly rate of wage. All hours worked on Sundays, holidays and after twelve (12) hours, Monday through Friday and after ten (10) hours on Saturday shall be paid at double the hourly rate of wage.

P. All hours worked on Saturdays (except makeup days if circumstances warrant) and Sundays shall be paid at one and one-half times the hourly rate of wage. All hours worked on holidays shall be paid at double the hourly rate of wage.

Q. The first two (2) hours after eight (8) regular hours Monday through Friday and up to ten (10) hours worked on Saturdays shall be paid at one and one-half times the hourly rate of wage. All hours worked in excess of ten (10) hours per day Monday through Saturday and all hours worked on Sundays and holidays (except Christmas day) shall be paid at double the hourly rate of wage. All hours worked on Christmas day shall be paid at two and one-half times the hourly rate of wage.

R. All hours worked on Sundays and holidays shall be paid at two times the hourly rate of wage.

U. All hours worked on Saturdays shall be paid at one and one-half times the hourly rate of wage. All hours worked on Sundays and holidays (except Labor Day) shall be paid at two times the hourly rate of wage. All hours worked on Labor Day shall be paid at three times the hourly rate of wage.

V. All hours worked on Sundays and holidays (except Thanksgiving Day and Christmas day) shall be paid at one and one-half times the hourly rate of wage. All hours worked on Thanksgiving Day and Christmas day shall be paid at double the hourly rate of wage.

X. The first four (4) hours after eight (8) regular hours Monday through Friday and the first twelve (12) hours on Saturday shall be paid at one and one-half times the hourly rate of wage. All hours worked over twelve (12) hours Monday through Saturday, Sundays and holidays shall be paid at double the hourly rate of wage. When holiday falls on Saturday or Sunday, the day before Saturday, Friday, and the day after Sunday, Monday, shall be considered the holiday and all work performed shall be paid at double the hourly rate of wage.

Y. All hours worked outside the hours of 5:00 am and 5:00 pm (or such other hours as may be agreed upon by any employer and the employee) and all hours worked in excess of eight (8) hours per day (10 hours per day for a 4 x 10 workweek) and on Saturdays and holidays (except labor day) shall be paid at one and one-half times the hourly rate of wage. (except for employees who are absent from work without prior approval on a scheduled workday during the workweek shall be paid at the straight-time rate until they have worked 8 hours in a day (10 in a 4 x 10 workweek) or 40 hours during that workweek.) All hours worked Monday through Saturday over twelve (12) hours and all hours worked on Sundays and Labor Day shall be paid at double the hourly rate of wage.

Z. All hours worked on Saturdays and Sundays shall be paid at one and one-half times the hourly rate of wage. All hours worked on holidays shall be paid the straight time rate of pay in addition to holiday pay.

Provided to Builders Exchange of WA, Inc. For usage Conditions Agreement see www.bxwa.com - Always Verify Scal

Overtime Codes Continued

2. ALL HOURS WORKED IN EXCESS OF EIGHT (8) HOURS PER DAY OR FORTY (40) HOURS PER WEEK SHALL BE PAID AT ONE AND ONE-HALF TIMES THE HOURLY RATE OF WAGE.

   B. All hours worked on holidays shall be paid at one and one-half times the hourly rate of wage.

   F. The first eight (8) hours worked on holidays shall be paid at the straight hourly rate of wage in addition to the holiday pay. All hours worked in excess of eight (8) hours on holidays shall be paid at double the hourly rate of wage.

   M. This code appears to be missing. All hours worked on Saturdays, Sundays and holidays shall be paid at double the hourly rate of wage.

   R. All hours worked on Sundays and holidays and all hours worked over sixty (60) in one week shall be paid at double the hourly rate of wage.

   U. All hours worked on Saturdays shall be paid at one and one-half times the hourly rate of wage. All hours worked over 12 hours in a day or on Sundays and holidays shall be paid at double the hourly rate of wage.

3. ALL HOURS WORKED IN EXCESS OF EIGHT (8) HOURS PER DAY OR FORTY (40) HOURS PER WEEK SHALL BE PAID AT ONE AND ONE-HALF TIMES THE HOURLY RATE OF WAGE.

   F. All hours worked on Saturday shall be paid at one and one-half times the hourly rate of wage. All hours worked on Sunday shall be paid at two times the hourly rate of wage. All hours worked on paid holidays shall be paid at two and one-half times the hourly rate of wage including holiday pay.

   H. All work performed on Sundays between March 16th and October 14th and all Holidays shall be compensated for at two (2) times the regular rate of pay. Work performed on Sundays between October 15th and March 15th shall be compensated at one and one half (1-1/2) times the regular rate of pay.

   J. All hours worked between the hours of 10:00 pm and 5:00 am, Monday through Friday, and all hours worked on Saturdays shall be paid at a one and one-half times the hourly rate of wage. All hours worked on Sundays and holidays shall be paid at double the hourly rate of wage.

   K. Work performed in excess of eight (8) hours of straight time per day, or ten (10) hours of straight time per day when four ten (10) hour shifts are established, or forty (40) hours of straight time per week, Monday through Friday, or outside the normal 5 am to 6pm shift, and all work on Saturdays shall be paid at one and one-half times the hourly rate of wage. All work performed after 6:00 pm Saturday to 5:00 am Monday and Holidays, and all hours worked in excess of twelve (12) hours in a single shift shall be paid at double the hourly rate of wage.

   After an employee has worked eight (8) hours at an applicable overtime rate, all additional hours shall be at the applicable overtime rate until such time as the employee has had a break of eight (8) hours or more. When an employee returns to work without at least eight (8) hours time off since their previous shift, all such time shall be a continuation of shift and paid at the applicable overtime rate until he/she shall have the eight (8) hours rest period.

Provided to Builders Exchange of WA, Inc. For usage Conditions Agreement see www.bxwa.com - Always Verify Scal

Overtime Codes Continued

4. ALL HOURS WORKED IN EXCESS OF EIGHT (8) HOURS PER DAY OR FORTY (40) HOURS PER WEEK SHALL BE PAID AT ONE AND ONE-HALF TIMES THE HOURLY RATE OF WAGE.

A. All hours worked in excess of eight (8) hours per day or forty (40) hours per week shall be paid at double the hourly rate of wage. All hours worked on Saturdays, Sundays and holidays shall be paid at double the hourly rate of wage

C. On Monday through Friday, the first four (4) hours of overtime after eight (8) hours of straight time work shall be paid at one and one half (1-1/2) times the straight time rate of pay, unless a four (4) day ten (10) hour workweek has been established. On a four (4) day ten (10) hour workweek scheduled Monday through Thursday, or Tuesday through Friday, the first two (2) hours of overtime after ten (10) hours of straight time work shall be paid at one and one half (1-1/2) times the straight time rate of pay. On Saturday, the first twelve (12) hours of work shall be paid at one and one half (1-1/2) times the straight time rate of pay, except that if the job is down on Monday through Friday due to weather conditions or other conditions outside the control of the employer, the first ten (10) hours on Saturday may be worked at the straight time rate of pay. All hours worked over twelve (12) hours in a day and all hours worked on Sunday and Holidays shall be paid at two (2) times the straight time rate of pay.

D. All hours worked in excess of eight (8) hours per day or forty (40) hours per week shall be paid at double the hourly rate of wage. All hours worked on Saturday, Sundays and holidays shall be paid at double the hourly rate of pay. Rates include all members of the assigned crew.

EXCEPTION:
On all multipole structures and steel transmission lines, switching stations, regulating, capacitor stations, generating plants, industrial plants, associated installations and substations, except those substations whose primary function is to feed a distribution system, will be paid overtime under the following rates:

The first two (2) hours after eight (8) regular hours Monday through Friday of overtime on a regular workday, shall be paid at one and one-half times the hourly rate of wage. All hours in excess of ten (10) hours will be at two (2) times the hourly rate of wage. The first eight (8) hours worked on Saturday will be paid at one and one-half (1-1/2) times the hourly rate of wage. All hours worked in excess of eight (8) hours on Saturday, and all hours worked on Sundays and holidays will be at the double the hourly rate of wage.

All overtime eligible hours performed on the above described work that is energized, shall be paid at the double the hourly rate of wage.

E. The first two (2) hours after eight (8) regular hours Monday through Friday and the first eight (8) hours on Saturday shall be paid at one and one-half times the hourly rate of wage. All other hours worked Monday through Saturday, and all hours worked on Sundays and holidays shall be paid at double the hourly rate of wage.

On a four-day, ten-hour weekly schedule, either Monday thru Thursday or Tuesday thru Friday schedule, all hours worked after ten shall be paid at double the hourly rate of wage. The Monday or Friday not utilized in the normal four-day, ten hour work week, and Saturday shall be paid at one and one half (1½) times the regular shift rate for the first eight (8) hours. All other hours worked Monday through Saturday, and all hours worked on Sundays and holidays shall be paid at double the hourly rate of wage.

G. All hours worked on Saturdays shall be paid at one and one-half times the hourly rate of wage. All hours worked Monday through Saturday over twelve (12) hours and all hours worked on Sundays and holidays shall be paid at double the hourly rate of wage.

I. The First eight (8) hours worked on Saturdays shall be paid at one and one-half times the hourly rate of wage. All hours worked in excess of eight (8) per day on Saturdays shall be paid at double the hourly rate of wage. All hours worked on Sundays and holidays shall be paid at double the hourly rate of wage.

Provided to Builders Exchange of WA, Inc. For usage Conditions Agreement see www.bxwa.com - Always Verify Scal

Overtime Codes Continued

4. J. The first eight (8) hours worked on a Saturday shall be paid at one and one-half times the hourly rate of wage. All hours worked in excess of eight (8) hours on a Saturday shall be paid at double the hourly rate of wage. All hours worked over twelve (12) in a day, and all hours worked on Sundays and Holidays shall be paid at double the hourly rate of wage.

K. All hours worked on a Saturday shall be paid at one and one-half times the hourly rate of wage, so long as Saturday is the sixth consecutive day worked. All hours worked over twelve (12) in a day Monday through Saturday, and all hours worked on Sundays and Holidays shall be paid at double the hourly rate of wage.

L. The first twelve (12) hours worked on a Saturday shall be paid at one and one-half times the hourly rate of wage. All hours worked on a Saturday in excess of twelve (12) hours shall be paid at double the hourly rate of pay. All hours worked over twelve (12) in a day Monday through Friday, and all hours worked on Sundays shall be paid at double the hourly rate of wage. All hours worked on a holiday shall be paid at one and one-half times the hourly rate of wage, except that all hours worked on Labor Day shall be paid at double the hourly rate of pay.

S. On a four (4) day ten (10) hour workweek scheduled Monday through Thursday, or Tuesday through Friday, work performed in excess of (10) hours shall be paid at one and one half (1-1/2) times the hourly rate of pay. On Monday through Friday, work performed outside the normal work hours of 6:00 a.m. and 6:00 p.m. shall be paid at one and one-half (1-1/2) times the straight time rate, (except for special shifts or multiple shift operations).

All hours worked on Saturdays shall be paid at one and one-half times the hourly rate of wage. All work performed on Sundays and holidays shall be paid at double the hourly rate of wage. When an employee returns to work without at least eight (8) hours time off since their previous shift, all such time shall be a continuation of shift and paid at the applicable overtime rate until such time as the employee has had a break of eight (8) hours.

Multiple Shift Operations: When the first shift of a multiple shift (a two or three shift) operation is started at the basic straight time rate or at a specific overtime rate, all shifts of that day's operation shall be completed at that rate. Special Shifts: The Special Shift Premium is the basic hourly rate of pay plus $2.00 an hour. When due to conditions beyond the control of the employer or when an owner (not acting as the contractor), a government agency or the contract specifications require more than four (4) hours of a special shift can only be performed outside the normal 6am to 6pm shift then the special shift premium will be applied to the basic straight time for the entire shift. When an employee works on a special shift, they shall be paid the special shift premium for each hour worked unless they are in overtime or double-time status. (For example, the special shift premium does not waive the overtime requirements for work performed on Saturday or Sunday).

U. The first four (4) hours after eight (8) regular hours Monday through Friday and the first twelve (12) hours on Saturday shall be paid at one and one-half times the hourly rate of wage. (Except on makeup days if work is lost due to inclement weather, then the first eight (8) hours on Saturday may be paid the regular rate.) All hours worked over twelve (12) hours Monday through Saturday, and all hours worked on Sundays and holidays shall be paid at double the hourly rate of wage.

Provided to Builders Exchange of WA, Inc. For usage Conditions Agreement see www.bxwa.com - Always Verify Scal

Overtime Codes Continued

4. X. All hours worked on Saturdays shall be paid at one and one-half times the hourly rate of wage. All hours worked on Sundays and holidays shall be paid at double the hourly rate of wage. Work performed outside the normal shift of 6 am to 6pm shall be paid at one and one-half the straight time rate, (except for special shifts or three shift operations). All work performed on Sundays and holidays shall be paid at double the hourly rate of wage. Shifts may be established when considered necessary by the Employer.

The Employer may establish shifts consisting of eight (8) or ten (10) hours of work (subject to WAC 296-127-022), that shall constitute a normal forty (40) hour work week. The Employer can change from a 5-eight to a 4-ten hour schedule or back to the other. All hours of work on these shifts shall be paid for at the straight time hourly rate. Work performed in excess of eight hours (or ten hours per day (subject to WAC 296-127-022) shall be paid at one and one-half the straight time rate.

When due to conditions beyond the control of the Employer, or when contract specifications require that work can only be performed outside the regular day shift, then by mutual agreement a special shift may be worked at the straight time rate, eight (8) hours work for eight (8) hours pay. The starting time shall be arranged to fit such conditions of work.

When an employee returns to work without at a break of eight (8) hours since their previous shift, all such time shall be a continuation of shift and paid at the applicable overtime rate until such time as the employee has had a break of eight (8) hours.

Overtime Codes Continued

11. ALL HOURS WORKED IN EXCESS OF EIGHT (8) HOURS PER DAY OR FORTY (40) HOURS PER WEEK SHALL BE PAID AT ONE AND ONE-HALF TIMES THE HOURLY RATE OF WAGE.

B After an employee has worked eight (8) hours, all additional hours worked shall be paid at the applicable overtime rate until such time as the employee has had a break of eight (8) hours or more.

C The first two (2) hours after eight (8) regular hours Monday through Friday and the first eight (8) hours on Saturday shall be paid at one and one-half times the hourly rate of wage. All other overtime hours worked, except Labor Day, and all hours on Sunday shall be paid at double the hourly rate of wage. All hours worked on Labor Day shall be paid at three times the hourly rate of wage. All non-overtime and non-holiday hours worked between 4:00 pm and 5:00 am, Monday through Friday, shall be paid at a premium rate of 15% over the hourly rate of wage.

D. All hours worked on Saturdays and holidays shall be paid at one and one-half times the hourly rate of wage. All hours worked on Sundays shall be paid at double the hourly rate of wage.

After an employee has worked eight (8) hours, all additional hours worked shall be paid at the applicable overtime rate until such time as the employee has had a break of eight (8) hours or more.

E. The first two (2) hours after eight (8) regular hours Monday through Friday, the first ten (10) hours on Saturday, and the first ten (10) hours worked on Holidays shall be paid at one and one-half times the hourly rate of wage. All hours worked over ten (10) hours Monday through Saturday, and Sundays shall be paid at double the hourly rate of wage.

After an employee has worked eight (8) hours, all additional hours worked shall be paid at the applicable overtime rate until such time as the employee has had a break of eight (8) hours or more.

Provided to Builders Exchange of WA, Inc. For usage Conditions Agreement see www.bxwa.com - Always Verify Scal

Overtime Codes Continued

11. F. The first two (2) hours after eight (8) regular hours Monday through Friday and the first eight (8) hours on Saturday shall be paid at one and one-half times the hourly rate of wage. All other hours worked Monday through Saturday, and all hours worked on Sundays and holidays shall be paid at double the hourly rate of wage.

On a four-day, ten-hour weekly schedule, either Monday thru Thursday or Tuesday thru Friday schedule, all hours worked after ten shall be paid at double the hourly rate of wage. The Monday or Friday not utilized in the normal four-day, ten hour work week, and Saturday shall be paid at one-half times the hourly rate of wage for the first eight (8) hours. All other hours worked Monday through Saturday, and all hours worked on Sundays and holidays shall be paid at double the hourly rate of wage.

G. Work performed in excess of eight (8) hours of straight time per day, or ten (10) hours of straight time per day when four ten (10) hour shifts are established, or forty (40) hours of straight time per week, Monday through Friday, or outside the normal 5 am to 6pm shift, and all work on Saturdays shall be paid at one and one-half times the hourly rate of wage.

All work performed after 6:00 pm Saturday to 5:00 am Monday and Holidays, and all hours worked in excess of twelve (12) hours in a single shift shall be paid at double the hourly rate of wage.

After an employee has worked eight (8) hours at an applicable overtime rate, all additional hours shall be at the applicable overtime rate until such time as the employee has had a break of nine (9) hours or more. When an employee returns to work without at least nine (9) hours time off since their previous shift, all such time shall be a continuation of shift and paid at the applicable overtime rate until he/she shall have the nine (9) hours rest period.

H. Work performed in excess of eight (8) hours of straight time per day, or ten (10) hours of straight time per day when four ten (10) hour shifts are established, or forty (40) hours of straight time per week, Monday through Friday, or outside the normal 5 am to 6pm shift, and all work on Saturdays shall be paid at one and one-half times the hourly rate of wage.

All work performed after 6:00 pm Saturday to 5:00 am Monday and Holidays, and all hours worked in excess of twelve (12) hours in a single shift shall be paid at double the hourly rate of wage.

After an employee has worked eight (8) hours at an applicable overtime rate, all additional hours shall be at the applicable overtime rate until such time as the employee has had a break of ten (10) hours or more. When an employee returns to work without at least ten (10) hours time off since their previous shift, all such time shall be a continuation of shift and paid at the applicable overtime rate until he/she shall have the ten (10) hours rest period.

J. All hours worked on holidays shall be paid at double the hourly rate of wage.

K. On Monday through Friday hours worked outside 4:00 am and 5:00 pm, and the first two (2) hours after eight (8) hours worked shall be paid at one and one-half times the hourly rate. All hours worked over 10 hours per day Monday through Friday, and all hours worked on Saturdays, Sundays, and Holidays worked shall be paid at double the hourly rate of wage.

L. An employee working outside 5:00 am and 5:00 pm shall receive an additional two dollar ($2.00) per hour for all hours worked that shift. All hours worked on holidays shall be paid at one and one-half times the hourly rate of wage. All hours worked on holidays shall be paid at one and one-half times the hourly rate of wage.

Provided to Builders Exchange of WA, Inc. For usage Conditions Agreement see www.bxwa.com - Always Verify Scal

Overtime Codes Continued

11. M. On Monday through Friday, the first four (4) hours of overtime after eight (8) hours of straight time work shall be paid at one and one half (1-1/2) times the straight time rate of pay, unless a four (4) day ten (10) hour workweek has been established. On a four (4) day ten (10) hour workweek scheduled Monday through Thursday, or Tuesday through Friday, the first two (2) hours of overtime after ten (10) hours of straight time work shall be paid at one and one half (1-1/2) times the straight time rate of pay.

Work performed outside the normal work hours of 5:00 a.m. and 6:00 p.m. shall be paid at one and one-half (1-1/2) times the straight time rate, (except for special shifts or multiple shift operations). When the first shift of a multiple shift (a two or three shift) operation is started at the basic straight time rate or at a specific overtime rate, all shifts of that day's operation shall be completed at that rate. When due to conditions beyond the control of the Employer or when contract specifications require that work can only be performed outside the regular day shift of 5:00 am to 6:00 pm, then a special shift may be worked at the straight time rate, plus the shift pay premium when applicable. The starting time of work will be arranged to fit such conditions of work. Such shift shall consist of eight (8) hours work for eight (8) hours pay or ten (10) hours work for ten (10) hours pay for four ten shifts.

On Saturday, the first twelve (12) hours of work shall be paid at one and one half (1-1/2) times the straight time rate of pay. All work performed after 6:00 pm Saturday to 5:00 am Monday, all work performed over twelve (12) hours, and all work performed on holidays shall be paid at double the straight time rate of pay.

Shift Pay Premium: In an addition to any overtime already required, all hours worked between the hours of 6:00 pm and 5:00 am shall receive an additional two dollars ($2.00) per hour.

N. All work performed over twelve hours in a shift and all work performed on Sundays and Holidays shall be paid at double the straight time rate.

Any time worked over eight (8) hours on Saturday shall be paid double the straight time rate, except employees assigned to work six 10-hour shifts per week shall be paid double the straight time rate for any time worked on Saturday over 10 hours.

O. All work performed on Saturdays, Sundays, and Holidays shall be paid at one and one half (1-1/2) times the straight time rate of pay.

Provided to Builders Exchange of WA, Inc. For usage Conditions Agreement see www.bxwa.com - Always Verify Scal

Overtime Codes Continued

11. P. Work performed in excess of ten (10) hours of straight time per day when four ten (10) hour shifts are established and all work on Saturdays, except for make-up days shall be paid at time and one-half (1 ½) the straight time rate.

Work performed outside the normal work hours of 5:00 a.m. and 6:00 p.m. shall be paid at one and one-half (1-1/2) times the straight time rate, (except for special shifts or multiple shift operations). When the first shift of multiple shift (a two or three shift) operation is started at the basic straight time rate or at a specific overtime rate, all shifts of that day's operation shall be completed at that rate. When due to conditions beyond the control of the Employer or when contract specifications require that work can only be performed outside the regular day shift of 5:00 a.m. to 6:00 p.m., then a special shift may be worked at the straight time rate, plus the shift pay premium when applicable. The starting time of work will be arranged to fit such conditions of work. Such shifts shall consist of eight (8) hours work for eight (8) hours pay or ten (10) hours work for ten (10) hours pay for four ten-hour shifts.

In the event the job is down due to weather conditions, then Saturday may, be worked as a voluntary make-up day at the straight time rate. However, Saturday shall not be utilized as a make-up day when a holiday falls on Friday. All work performed on Sundays and holidays and work in excess of twelve (12) hours per day shall be paid at double (2x) the straight time rate of pay.

After an employee has worked eight (8) hours at an applicable overtime rate, all additional hours shall be at the applicable overtime rate until such time as the employee has had a break of eight (8) hours.

When an employee returns to work without a break of eight (8) hours since their previous shift, all such time shall be a continuation of shift and paid at the applicable overtime rate until such time as the employee has had a break of eight (8) hours.

Q. All hours worked between the hours of 6:00 pm and 6:00 am, Monday through Saturday, shall be paid at a premium rate of 35% over the hourly rate of wage. Work performed on Sundays shall be paid at double time. All hours worked on holidays shall be paid at double the hourly rate of wage.

R On Monday through Saturday hours worked outside 6:00 am and 7:00 pm, and all hours after eight (8) hours worked shall be paid at one and one-half times the hourly rate. All hours worked on Sundays and Holidays shall be paid at double the hourly rate of wage.

When a holiday falls on a Saturday, the Friday before shall be the observed holiday. When a holiday falls on a Sunday, the following Monday shall be the observed holiday.

S. The first ten (10) hours worked on Saturdays shall be paid at one and one-half times the hourly rate of wage. In the event the job is down due to weather conditions, or other conditions beyond the control of the Employer, then Saturday may be worked at the straight time rate, for the first eight (8) hours, or the first ten (10) hours when a four day ten hour workweek has been established.

All hours worked Monday through Saturday over twelve (12) hours and all hours worked on Sundays and holidays shall be paid at double the hourly rate of wage.

When an employee returns to work without a break of eight (8) hours since their previous shift, all such time shall be a continuation of shift and paid at the applicable overtime rate until such time as the employee has had a break of eight (8) hours.

Provided to Builders Exchange of WA, Inc. For usage Conditions Agreement see www.bxwa.com - Always Verify Scal

Overtime Codes Continued

11. T. On Monday through Friday, the first four (4) hours of overtime after eight (8) hours of straight time work shall be paid at one and one half (1-1/2) times the straight time rate of pay, unless a four (4) day ten (10) hour workweek has been established. On a four (4) day ten (10) hour workweek scheduled Monday through Thursday, or Tuesday through Friday, the first two (2) hours of overtime after ten (10) hours of straight time work shall be paid at one and one half (1-1/2) times the straight time rate of pay.

On Saturday, the first twelve (12) hours of work shall be paid at one and one half (1-1/2) times the straight time rate of pay, except that if the job is down on Monday through Friday due to weather conditions or other conditions outside the control of the employer, the first ten (10) hours on Saturday may be worked at the straight time rate of pay.

All hours worked over twelve (12) hours in a day and all hours worked on Sunday and Holidays shall be paid at two (2) times the straight time rate of pay.

U. On Monday through Friday, the first four (4) hours of overtime after eight (8) hours of straight time work shall be paid at one and one half (1-1/2) times the straight time rate of pay, unless a four (4) day ten (10) hour workweek has been established. On a four (4) day ten (10) hour workweek scheduled Monday through Thursday, or Tuesday through Friday, the first two (2) hours of overtime after ten (10) hours of straight time work shall be paid at one and one half (1-1/2) times the straight time rate of pay.

On Saturday, the first twelve (12) hours of work shall be paid at one and one half (1-1/2) times the straight time rate of pay, except that if the job is down on Monday through Friday due to weather conditions or other conditions outside the control of the employer, the first ten (10) hours on Saturday may be worked at the straight time rate of pay.

All hours worked over twelve (12) hours in a day and all hours worked on Sunday and Holidays shall be paid at two (2) times the straight time rate of pay.

If, due to conditions beyond the control of the Employer or when contract specifications require that work can only be performed outside the regular day shift, then a Special Shift may be worked, Monday through Friday, at the straight-time rate. The starting time of work for the Special Shift will be arranged to fit such conditions of work. Such Special Shift shall consist of eight (8) hours of work for eight (8) hours of pay or ten (10) hours of work for ten(10) hours of pay on a four-ten workday schedule.

V. All hours worked on Saturdays and Sundays (except make-up days due to conditions beyond the control of the employer) shall be paid at one and one-half times the hourly rate of wage. All hours worked on holidays shall be paid at double the hourly rate of wage.

W. Work performed in excess of eight (8) hours of straight time per day, or ten (10) hours of straight time per day when four ten (10) hour shifts are established, or forty (40) hours of straight time per week, Monday through Friday, or outside the normal 6 am to 6pm shift, and all work on Saturdays shall be paid at one and one-half times the hourly rate of wage. All work performed on Sundays and Holidays shall be paid at double the hourly rate of wage.

After an employee has worked eight (8) hours at an applicable overtime rate, all additional hours shall be at the applicable overtime rate until such time as the employee has had a break of eight (8) hours or more.

When an employee returns to work without at least eight (8) hours time off since their previous shift, all such time shall be a continuation of shift and paid at the applicable overtime rate until he/she shall have the eight (8) hours rest period.

Provided to Builders Exchange of WA, Inc. For usage Conditions Agreement see www.bxwa.com - Always Verify Scal

Holiday Codes

5. A. Holidays: New Year's Day, Memorial Day, Independence Day, Labor Day, Thanksgiving Day, Friday after Thanksgiving Day, and Christmas Day (7).

B. Holidays: New Year's Day, Memorial Day, Independence Day, Labor Day, Thanksgiving Day, Friday after Thanksgiving Day, the day before Christmas, and Christmas Day (8).

C. Holidays: New Year's Day, Presidents' Day, Memorial Day, Independence Day, Labor Day, Thanksgiving Day, the Friday after Thanksgiving Day, And Christmas Day (8).

D. Holidays: New Year's Day, Memorial Day, Independence Day, Labor Day, Thanksgiving Day, the Friday and Saturday after Thanksgiving Day, And Christmas Day (8).

H. Holidays: New Year's Day, Memorial Day, Independence Day, Thanksgiving Day, the Day after Thanksgiving Day, And Christmas (6).

I. Holidays: New Year's Day, Memorial Day, Independence Day, Labor Day, Thanksgiving Day, and Christmas Day (6).

K. Holidays: New Year's Day, Presidents' Day, Memorial Day, Independence Day, Labor Day, Thanksgiving Day, Friday After Thanksgiving Day, The Day Before Christmas, And Christmas Day (9).

L. Holidays: New Year's Day, Martin Luther King Jr. Day, Memorial Day, Independence Day, Labor Day, Thanksgiving Day, Friday after Thanksgiving Day, And Christmas Day (8).

N. Holidays: New Year's Day, Presidents' Day, Memorial Day, Independence Day, Labor Day, Veterans' Day, Thanksgiving Day, The Friday After Thanksgiving Day, And Christmas Day (9).

P. Holidays: New Year's Day, Memorial Day, Independence Day, Labor Day, Thanksgiving Day, Friday And Saturday After Thanksgiving Day, The Day Before Christmas, And Christmas Day (9). If A Holiday Falls On Sunday, The Following Monday Shall Be Considered As A Holiday.

Q. Paid Holidays: New Year's Day, Memorial Day, Independence Day, Labor Day, Thanksgiving Day, and Christmas Day (6).

R. Paid Holidays: New Year's Day, Memorial Day, Independence Day, Labor Day, Thanksgiving Day, Day After Thanksgiving Day, One-Half Day Before Christmas Day, And Christmas Day. (7 1/2).

S. Paid Holidays: New Year's Day, Presidents' Day, Memorial Day, Independence Day, Labor Day, Thanksgiving Day, And Christmas Day (7).

Z. Holidays: New Year's Day, Memorial Day, Independence Day, Labor Day, Veterans Day, Thanksgiving Day, the Friday after Thanksgiving Day, And Christmas Day (8).

Provided to Builders Exchange of WA, Inc. For usage Conditions Agreement see www.bxwa.com - Always Verify Scal

Holiday Codes Continued

6. G. Paid Holidays: New Year's Day, Martin Luther King Jr. Day, Presidents' Day, Memorial Day, Independence Day, Labor Day, Veterans' Day, Thanksgiving Day, the Friday after Thanksgiving Day, Christmas Day, and Christmas Eve Day (11).

H. Paid Holidays: New Year's Day, New Year's Eve Day, Memorial Day, Independence Day, Labor Day, Thanksgiving Day, Friday After Thanksgiving Day, Christmas Day, The Day After Christmas, And A Floating Holiday (10).

T. Paid Holidays: New Year's Day, Presidents' Day, Memorial Day, Independence Day, Labor Day, Thanksgiving Day, The Friday After Thanksgiving Day, The Last Working Day Before Christmas Day, And Christmas Day (9).

Z. Holidays: New Year's Day, Memorial Day, Independence Day, Labor Day, Thanksgiving Day, Friday after Thanksgiving Day, And Christmas Day (7). If a holiday falls on Saturday, the preceding Friday shall be considered as the holiday. If a holiday falls on Sunday, the following Monday shall be considered as the holiday.

Holiday Codes Continued

7. A. Holidays: New Year's Day, Memorial Day, Independence Day, Labor Day, Thanksgiving Day, the Friday and Saturday after Thanksgiving Day, And Christmas Day (8). Any Holiday Which Falls On A Sunday Shall Be Observed As A Holiday On The Following Monday. If any of the listed holidays falls on a Saturday, the preceding Friday shall be a regular work day.

B. Holidays: New Year's Day, Memorial Day, Independence Day, Labor Day, Thanksgiving Day, the Friday and Saturday after Thanksgiving Day, And Christmas Day (8). Any holiday which falls on a Sunday shall be observed as a holiday on the following Monday. Any holiday which falls on a Saturday shall be observed as a holiday on the preceding Friday.

C. Holidays: New Year's Day, Martin Luther King Jr. Day, Memorial Day, Independence Day, Labor Day, Thanksgiving Day, the Friday after Thanksgiving Day, And Christmas Day (8). Any holiday which falls on a Sunday shall be observed as a holiday on the following Monday. Any holiday which falls on a Saturday shall be observed as a holiday on the preceding Friday.

D. Paid Holidays: New Year's Day, Memorial Day, Independence Day, Labor Day, Veteran's Day, Thanksgiving Day, the Friday after Thanksgiving Day, And Christmas Day (8). Unpaid Holidays: President's Day. Any paid holiday which falls on a Sunday shall be observed as a holiday on the following Monday. Any paid holiday which falls on a Saturday shall be observed as a holiday on the preceding Friday.

E. Holidays: New Year's Day, Memorial Day, Independence Day, Labor Day, Thanksgiving Day, the Friday after Thanksgiving Day, And Christmas Day (7). Any holiday which falls on a Sunday shall be observed as a holiday on the following Monday. Any holiday which falls on a Saturday shall be observed as a holiday on the preceding Friday.

F. Holidays: New Year's Day, Memorial Day, Independence Day, Labor Day, Thanksgiving Day, the Friday after Thanksgiving Day, the last working day before Christmas day and Christmas day (8). Any holiday which falls on a Sunday shall be observed as a holiday on the following Monday. Any holiday which falls on a Saturday shall be observed as a holiday on the preceding Friday.

Provided to Builders Exchange of WA, Inc. For usage Conditions Agreement see www.bxwa.com - Always Verify Scal

Holiday Codes Continued

7. G. Holidays: New Year's Day, Memorial Day, Independence Day, Labor Day, Thanksgiving Day, and Christmas Day (6). Any holiday which falls on a Sunday shall be observed as a holiday on the following Monday.

H. Holidays: New Year's Day, Martin Luther King Jr. Day, Independence Day, Memorial Day, Labor Day, Thanksgiving Day, the Friday after Thanksgiving Day, the Last Working Day before Christmas Day and Christmas Day (9). Any holiday which falls on a Sunday shall be observed as a holiday on the following Monday. Any holiday which falls on a Saturday shall be observed as a holiday on the preceding Friday.

I. Holidays: New Year's Day, President's Day, Independence Day, Memorial Day, Labor Day, Thanksgiving Day, The Friday After Thanksgiving Day, The Day Before Christmas Day And Christmas Day (9). Any holiday which falls on a Sunday shall be observed as a holiday on the following Monday. Any holiday which falls on a Saturday shall be observed as a holiday on the preceding Friday.

J. Holidays: New Year's Day, Independence Day, Memorial Day, Labor Day, Thanksgiving Day and Christmas Day (6). Any holiday which falls on a Sunday shall be observed as a holiday on the following Monday. Any holiday which falls on a Saturday shall be observed as a holiday on the preceding Friday.

K. Holidays: New Year's Day, Memorial Day, Independence Day, Thanksgiving Day, the Friday and Saturday after Thanksgiving Day, And Christmas Day (8). Any holiday which falls on a Sunday shall be observed as a holiday on the following Monday. Any holiday which falls on a Saturday shall be observed as a holiday on the preceding Friday.

L. Holidays: New Year's Day, Memorial Day, Labor Day, Independence Day, Thanksgiving Day, the Last Work Day before Christmas Day, And Christmas Day (7). Any holiday which falls on a Sunday shall be observed as a holiday on the following Monday. Any holiday which falls on a Saturday shall be observed as a holiday on the preceding Friday.

N. Holidays: New Year's Day, Memorial Day, Independence Day, Labor Day, Thanksgiving Day, the Friday after Thanksgiving Day, And Christmas Day (7). Any holiday which falls on a Sunday shall be observed as a holiday on the following Monday. When Christmas falls on a Saturday, the preceding Friday shall be observed as a holiday.

P. Holidays: New Year's Day, Memorial Day, Independence Day, Labor Day, Thanksgiving Day, Friday after Thanksgiving Day, And Christmas Day (7). Any holiday which falls on a Sunday shall be observed as a holiday on the following Monday.

Q. Holidays: New Year's Day, Memorial Day, Independence Day, Labor Day, Thanksgiving Day, the Friday after Thanksgiving Day, the Last Working Day before Christmas Day and Christmas Day (8). Any holiday which falls on a Sunday shall be observed as a holiday on the following Monday. If any of the listed holidays falls on a Saturday, the preceding Friday shall be a regular work day.

S. Paid Holidays: New Year's Day, Memorial Day, Independence Day, Labor Day, Thanksgiving Day, Friday after Thanksgiving Day, Christmas Day, the Day after Christmas, and A Floating Holiday (9). If any of the listed holidays falls on a Sunday, the day observed by the Nation shall be considered a holiday and compensated accordingly.

V. Holidays: New Year's Day, President's Birthday, Memorial Day, Independence Day, Labor Day, Thanksgiving Day, the Friday after Thanksgiving Day, Christmas Day, the day before or after Christmas, and the day before or after New Year's Day. If any of the above listed holidays falls on a Sunday, the day observed by the Nation shall be considered a holiday and compensated accordingly.

W. Holidays: New Year's Day, Day After New Year's, Memorial Day, Independence Day, Labor Day, Thanksgiving Day, the Friday after Thanksgiving Day, Christmas Eve Day, Christmas Day, the day after Christmas, the day before New Year's Day, and a Floating Holiday.

Provided to Builders Exchange of WA, Inc. For usage Conditions Agreement see www.bxwa.com - Always Verify Scal

Holiday Codes Continued

7. X. Holidays: New Year's Day, Day before or after New Year's Day, Presidents' Day, Memorial Day, Independence Day, Labor Day, Thanksgiving Day, the Friday after Thanksgiving Day, Christmas Day, and the day before or after Christmas day. If a holiday falls on a Saturday or on a Friday that is the normal day off, then the holiday will be taken on the last normal workday. If the holiday falls on a Monday that is the normal day off or on a Sunday, then the holiday will be taken on the next normal workday.

Y. Holidays: New Year's Day, Presidents' Day, Memorial Day, Independence Day, Labor Day, Thanksgiving Day, the Friday after Thanksgiving Day, and Christmas Day. (8) If the holiday falls on a Sunday, then the day observed by the federal government shall be considered a holiday and compensated accordingly.

Z. Holidays: New Year's Day, Memorial Day, Independence Day, Labor Day, Thanksgiving Day, the Friday and Saturday after Thanksgiving Day, Christmas Eve, and Christmas Day (9). Any holiday which falls on a Saturday shall be observed as a holiday on the preceding Friday. Any holiday which falls on a Sunday shall be observed as a holiday on the following Monday.

Holiday Codes Continued

15. G. New Year's Day, Washington's Birthday, Memorial Day, Independence Day, Labor Day, Thanksgiving Day, The Friday After Thanksgiving Day, the last scheduled workday before Christmas, and Christmas Day (9). If any of the listed holidays falls on a Sunday, the day observed by the Nation shall be considered a holiday and compensated accordingly.

H. Holidays: New Year's Day, Martin Luther King Jr. Day, Independence Day, Memorial Day, Labor Day, Thanksgiving Day, the Friday after Thanksgiving Day, the Last Working Day before Christmas Day and Christmas Day (9). Any holiday which falls on a Sunday shall be observed as a holiday on the following Monday. Any holiday which falls on a Saturday shall be observed as a holiday on the preceding Friday.

I. Holidays: New Year's Day, President's Day, Independence Day, Memorial Day, Labor Day, Thanksgiving Day, The Friday After Thanksgiving Day, The Day Before Christmas Day And Christmas Day (9). Any holiday which falls on a Sunday shall be observed as a holiday on the following Monday. Any holiday which falls on a Saturday shall be observed as a holiday on the preceding Friday.

J. Holidays: New Year's Day, Martin Luther King Jr. Day, Memorial Day, Independence Day, Labor Day, Thanksgiving Day, the Friday and Saturday after Thanksgiving Day, and Christmas Day (9). Any holiday which falls on a Sunday shall be observed as a holiday on the following Monday. If any of the listed holidays falls on a Saturday, the preceding Friday shall be a regular work day.

K. Holidays: New Year's Day, Memorial Day, Independence Day, Thanksgiving Day, the Friday and Saturday after Thanksgiving Day, And Christmas Day (8). Any holiday which falls on a Sunday shall be observed as a holiday on the following Monday. Any holiday which falls on a Saturday shall be observed as a holiday on the preceding Friday.

L. Holidays: New Year's Day, Memorial Day, Independence Day, Labor Day, Veteran's Day, Thanksgiving Day, the Friday after Thanksgiving Day, and Christmas Day (8). Any holiday which falls on a Sunday shall be observed as a holiday on the following Monday. If any of the listed holidays falls on a Saturday, the preceding Friday shall be a regular work day.

M. Holidays: New Year's Day, Martin Luther King Jr. Day, Independence Day, Memorial Day, Labor Day, Thanksgiving Day, the Friday after Thanksgiving Day, Christmas Eve Day and Christmas Day (9). Any holiday which falls on a Sunday shall be observed as a holiday on the following Monday. If any of the listed holidays falls on a Saturday, the preceding Friday shall be a regular work day.

Provided to Builders Exchange of WA, Inc. For usage Conditions Agreement see www.bxwa.com - Always Verify Scal

Holiday Codes Continued

15. N. Holidays: New Year's Day, Memorial Day, Independence Day, Labor Day, Veteran's Day, Thanksgiving Day, the Friday after Thanksgiving Day, and Christmas Day (8). Any holiday which falls on a Sunday shall be observed as a holiday on the following Monday.

O. Holidays: New Year's Day, Martin Luther King Jr. Day, Memorial Day, Independence Day, Labor Day, Thanksgiving Day, the Friday and Saturday after Thanksgiving Day, the day before Christmas day, and Christmas Day (10). Any holiday which falls on a Sunday shall be observed as a holiday on the following Monday.

P. Holidays: New Year's Day, Memorial Day, Labor Day, Independence Day, Thanksgiving Day, the Friday after Thanksgiving Day, Christmas Eve Day, And Christmas Day (8). Any holiday which falls on a Sunday shall be observed as a holiday on the following Monday. Any holiday which falls on a Saturday shall be observed as a holiday on the preceding Friday.

Note Codes

8. D. Workers working with supplied air on hazmat projects receive an additional $1.00 per hour.

L. Workers on hazmat projects receive additional hourly premiums as follows -Level A: $0.75, Level B: $0.50, And Level C: $0.25.

M. Workers on hazmat projects receive additional hourly premiums as follows: Levels A & B: $1.00, Levels C & D: $0.50.

N. Workers on hazmat projects receive additional hourly premiums as follows -Level A: $1.00, Level B: $0.75, Level C: $0.50, And Level D: $0.25.

S. Effective August 31, 2012 – A Traffic Control Supervisor shall be present on the project whenever flagging or spotting or other traffic control labor is being utilized. Flaggers and Spotters shall be posted where shown on approved Traffic Control Plans or where directed by the Engineer. All flaggers and spotters shall possess a current flagging card issued by the State of Washington, Oregon, Montana, or Idaho. This classification is only effective on or after August 31, 2012.

T. Effective August 31, 2012 – A Traffic Control Laborer performs the setup, maintenance and removal of all temporary traffic control devices and construction signs necessary to control vehicular, bicycle, and pedestrian traffic during construction operations. Flaggers and Spotters shall be posted where shown on approved Traffic Control Plans or where directed by the Engineer. All flaggers and spotters shall possess a current flagging card issued by the State of Washington, Oregon, Montana, or Idaho. This classification is only effective on or after August 31, 2012.

U. Workers on hazmat projects receive additional hourly premiums as follows – Class A Suit: $2.00, Class B Suit: $1.50, And Class C Suit: $1.00. Workers performing underground work receive an additional $0.40 per hour for any and all work performed underground, including operating, servicing and repairing of equipment. The premium for underground work shall be paid for the entire shift worked. Workers who work suspended by a rope or cable receive an additional $0.50 per hour. The premium for work suspended shall be paid for the entire shift worked. Workers who do "pioneer" work (break open a cut, build road, etc.) more than one hundred fifty (150) feet above grade elevation receive an additional $0.50 per hour.

Provided to Builders Exchange of WA, Inc. For usage Conditions Agreement see www.bxwa.com - Always Verify Scal

Note Codes Continued

8. V. In addition to the hourly wage and fringe benefits, the following depth and enclosure premiums shall be paid. The premiums are to be calculated for the maximum depth and distance into an enclosure that a diver reaches in a day. The premiums are to be paid one time for the day and are not used in calculating overtime pay.

Depth premiums apply to depths of fifty feet or more. Over 50' to 100' - $2.00 per foot for each foot over 50 feet. Over 101' to 150' - $3.00 per foot for each foot over 101 feet. Over 151' to 220' - $4.00 per foot for each foot over 220 feet. Over 221' - $5.00 per foot for each foot over 221 feet.

Enclosure premiums apply when divers enter enclosures (such as pipes or tunnels) where there is no vertical ascent and is measured by the distance travelled from the entrance. 25' to 300' - $1.00 per foot from entrance. 300' to 600' - $1.50 per foot beginning at 300'. Over 600' - $2.00 per foot beginning at 600'.

W. Meter Installers work on single phase 120/240V self-contained residential meters. The Lineman/Groundmen rates would apply to meters not fitting this description.

X. Workers on hazmat projects receive additional hourly premiums as follows - Class A Suit: $2.00, Class B Suit: $1.50, Class C Suit: $1.00, and Class D Suit: $0.50. Special Shift Premium: Basic hourly rate plus $2.00 per hour.

When due to conditions beyond the control of the Employer or when an owner (not acting as the contractor), a government agency or the contract specifications requires that work can only be performed outside the normal 5 am to 6pm shift, then the special shift premium will be applied to the basic hourly rate. When an employee works on a special shift, they shall be paid a special shift premium for each hour worked unless they are in OT or Double-time status. (For example, the special shift premium does not waive the overtime requirements for work performed on Saturday or Sunday.)

Y. Tide Work: When employees are called out between the hours of 6:00 p.m. and 6:00 a.m. to work on tide work (work located in the tide plane) all time worked shall be at one and one-half times the hourly rate of pay.

Swinging Stage/Boatswains Chair: Employees working on a swinging state or boatswains chair or under conditions that require them to be tied off to allow their hands to be free shall receive seventy-five cents ($0.75) per hour above the classification rate.

Z. Workers working with supplied air on hazmat projects receive an additional $1.00 per hour.

Special Shift Premium: Basic hourly rate plus $2.00 per hour. When due to conditions beyond the control of the Employer or when an owner (not acting as a contractor), a government agency or the contract specifications require that more than (4) hours of a special shift can only be performed outside the normal 6 am to 6pm shift, then the special shift premium will be applied to the basic straight time for the entire shift. When an employee works on a special shift, they will be paid a special shift premium for each hour worked unless they are in overtime or double-time status. (For example, the special shift premium does not waive the overtime requirements for work performed on Saturday or Sunday.)

Provided to Builders Exchange of WA, Inc. For usage Conditions Agreement see www.bxwa.com - Always Verify Scal

Note Codes Continued

9. A. Workers working with supplied air on hazmat projects receive an additional $1.00 per hour.

Special Shift Premium: Basic hourly rate plus $2.00 per hour. When due to conditions beyond the control of the Employer or when an owner (not acting as the contractor), a government agency or the contract specifications require that more than four (4) hours of a special shift can only be performed outside the normal 6 am to 6pm shift, then the special shift premium will be applied to the basic straight time for the entire shift. When an employee works on a special shift, they shall be paid a special shift premium for each hour worked unless they are in overtime or double-time status. (For example, the special shift premium does not waive the overtime requirements for work performed on Saturday or Sunday.)

Certified Crane Operator Premium: Crane operators requiring certifications shall be paid $0.50 per hour above their classification rate.

Boom Pay Premium: All cranes including tower shall be paid as follows based on boom length:

(A) – 130' to 199' – $0.50 per hour over their classification rate.
(B) – 200' to 299' – $0.80 per hour over their classification rate.
(C) – 300' and over – $1.00 per hour over their classification rate.

B. The highest pressure registered on the gauge for an accumulated time of more than fifteen (15) minutes during the shift shall be used in determining the scale paid.

Tide Work: When employees are called out between the hours of 6:00 p.m. and 6:00 a.m. to work on tide work (work located in the tide plane) all time worked shall be at one and one-half times the hourly rate of pay. Swinging Stage/Boatswains Chair: Employees working on a swinging stage or boatswains chair or under conditions that require them to be tied off to allow their hands to be free shall receive seventy-five cents ($0.75) per hour above the classification rate.

C. Tide Work: When employees are called out between the hours of 6:00 p.m. and 6:00 a.m. to work on tide work (work located in the tide plane) all time worked shall be at one and one-half times the hourly rate of pay. Swinging Stage/Boatswains Chair: Employees working on a swinging stage or boatswains chair or under conditions that require them to be tied off to allow their hands to be free shall receive seventy-five cents ($0.75) per hour above the classification rate.

Effective August 31, 2012 – A Traffic Control Supervisor shall be present on the project whenever flagging or spotting or other traffic control labor is being utilized. A Traffic Control Laborer performs the setup, maintenance and removal of all temporary traffic control devices and construction signs necessary to control vehicular, bicycle, and pedestrian traffic during construction operations. Flaggers and Spotters shall be posted where shown on approved Traffic Control Plans or where directed by the Engineer. All flaggers and spotters shall possess a current flagging card issued by the State of Washington, Oregon, Montana, or Idaho. These classifications are only effective on or after August 31, 2012.

D. Industrial Painter wages are required for painting within industrial facilities such as treatment plants, pipelines, towers, dams, bridges, power generation facilities and manufacturing facilities such as chemical plants, etc., or anywhere abrasive blasting is necessary to prepare surfaces, or hazardous materials encapsulation is required.

E. Heavy Construction includes construction, repair, alteration or additions to the production, fabrication or manufacturing portions of industrial or manufacturing plants, hydroelectric or nuclear power plants and atomic reactor construction. Workers on hazmat projects receive additional hourly premiums as follows -Level A: $1.00, Level B: $0.75, Level C: $0.50, And Level D: $0.25.

Provided to Builders Exchange of WA, Inc. For usage Conditions Agreement see www.bxwa.com - Always Verify Scal

Note Codes Continued

9. F. Industrial Painter wages are required for painting within industrial facilities such as treatment plants, pipelines, towers, dams, power generation facilities and manufacturing facilities such as chemical plants, etc., or anywhere abrasive blasting is necessary to prepare surfaces, or hazardous materials encapsulation is required.

H. One (1) person crew shall consist of a Party Chief. (Total Station or similar one (1) person survey system). Two (2) person survey party shall consist of a least a Party Chief and a Chain Person. Three (3) person survey party shall consist of at least a Party Chief, an Instrument Person, and a Chain Person.

I. In addition to the hourly wage and fringe benefits, the following depth and enclosure premiums shall be paid. The premiums are to be calculated for the maximum depth and distance into an enclosure that a diver reaches in a day. The premiums are to be paid one time for the day and are not used in calculating overtime pay.

Depth premiums apply to depths of fifty feet or more. Over 50' to 100' - $2.00 per foot for each foot over 50 feet. Over 101' to 150' - $3.00 per foot for each foot over 101 feet. Over 151' to 220' - $4.00 per foot for each foot over 220 feet. Over 221' - $5.00 per foot for each foot over 221 feet.

Enclosure premiums apply when divers enter enclosures (such as pipes or tunnels) where there is no vertical ascent and is measured by the distance travelled from the entrance. 25’ to 300’ - $1.00 per foot from entrance. 300’ to 600’ - $1.50 per foot beginning at 300’. Over 600’ - $2.00 per foot beginning at 600’.

Employees may be required to perform any combination of work within the Diving team/crew, (with the exception of dive Supervisor) provided they are paid at the highest rate at which he/she has worked for the shift.

L. Workers on hazmat projects receive additional hourly premiums as follows -Level A: $0.75, Level B: $0.50, And Level C: $0.25.

Tide Work: When employees are called out between the hours of 6:00 p.m. and 6:00 a.m. to work on tide work (work located in the tide plane) all time worked shall be at one and one-half times the hourly rate of pay.

Swinging Stage/Boatswains Chair: Employees working on a swinging stage or boatswains chair or under conditions that require them to be tied off to allow their hands to be free shall receive seventy-five cents ($0.75) per hour above the classification rate.

M. Certified Crane Operator Premium: Crane operators requiring certifications shall be paid $1.50 per hour above their classification rate.

Workers on hazmat projects receive additional hourly premiums as follows - Class A Suit: $2.00, Class B Suit: $1.50, Class C Suit: $1.00, and Class D Suit: $0.50.

Special Shift Premium: Basic hourly rate plus $2.00 per hour. When due to conditions beyond the control of the Employer or when an owner (not acting as the contractor), a government agency or the contract specifications requires that work can only be performed outside the normal 6 am to 6pm shift, then the special shift premium will be applied to the basic hourly rate. When an employee works on a special shift, they shall be paid a special shift premium for each hour worked unless they are in OT or Double-time status. (For example, the special shift premium does not waive the overtime requirements for work performed on Saturday or Sunday.)

Provided to Builders Exchange of WA, Inc. For usage Conditions Agreement see www.bxwa.com - Always Verify Scal

APPENDIX B
WAYFINDING AND HISTORIC BOARD SIGN DETAILS

Provided to Builders Exchange of WA, Inc. For usage Conditions Agreement see www.bxwa.com - Always Verify Scal

(2) Two New Double Sided Wayfinding Signs

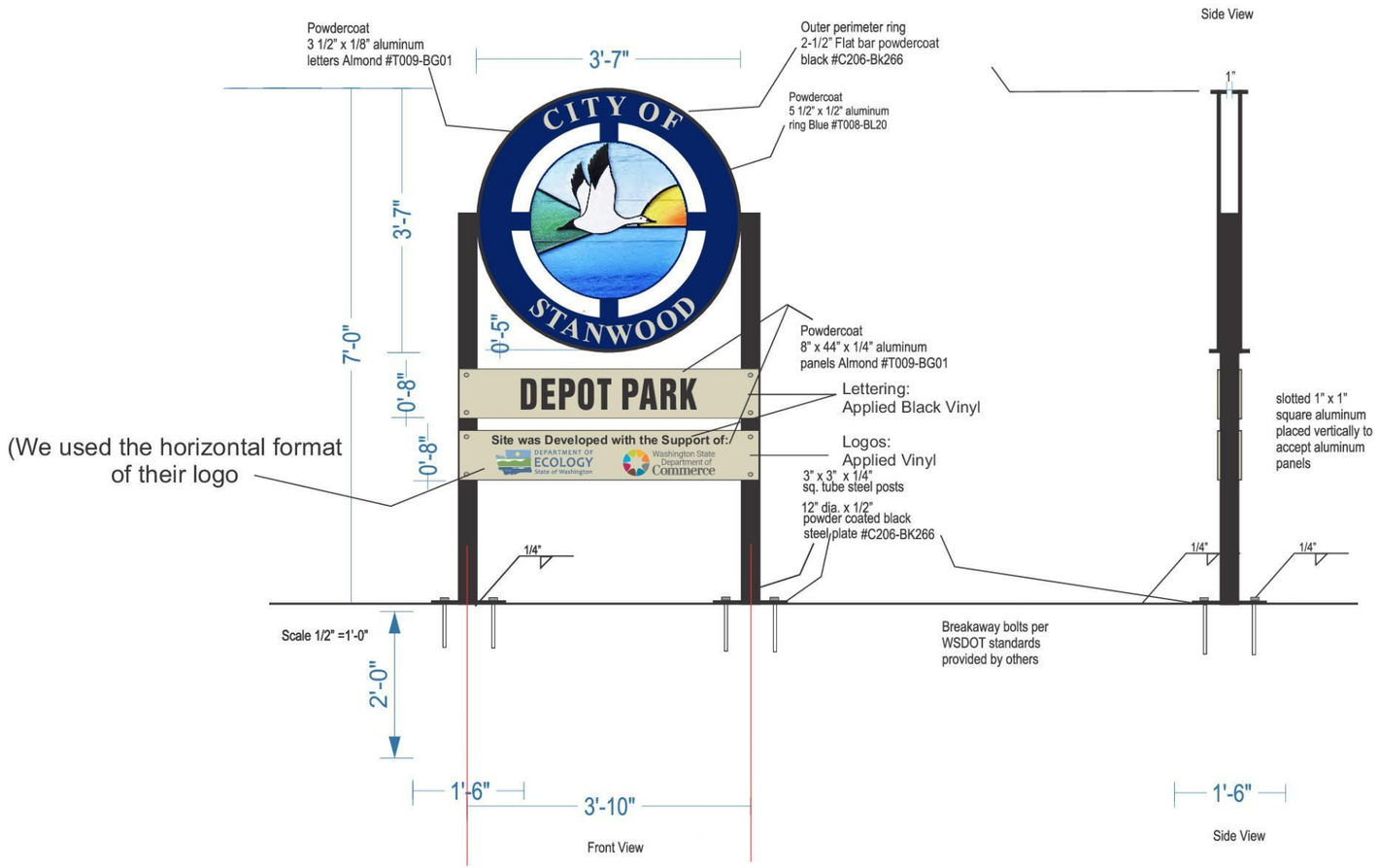

Color Key: Cardinal Powder Coat colors

Poles and Outer ring
to be C206- BK266

Ring
to be T008 - BL20

Leters & panel backgrounds
to be T009 - Bg01 - Almond

Job Name: City of Stanwood	**Scale:**	**Designer:** L.C.
Site Address: Stanwood, WA	**Date:** 12.4.25	**Revised:** 1.26.26
Sales Rep.: M.A.	**File Name:** City of Stanwood sign layout	**Design #:** 11947
2608 Hwy 99 S. Mount Vernon, WA 98273 Phone: (360) 424-1325 FAX: (360) 424-5212 WEB: www.meyersign.com		

MEYER SIGN & ADVERTISING CO, INC

NOTE: This Color Drawing is a simulation of the proposed colors and should be verified with actual materials.

☐ APPROVED AS IS ☐ APPROVED W/ CHANGES AS MARKED

NOTE: If this document has been e-mailed or faxed it may be out of scale.

© Meyer Sign & Advertising Co., Inc.
All Rights Reserved © 2026

CLIENT APPROVAL

SIGNATURE

DATE APPROVED

Unauthorized use, reproduction, and or display shall render the infringer liable for up to $150,000 in Statutory Damages, plus attorneys fees and costs, for each infringement, under the U.S. Copyright Act [17U.S.C. 412 & 504]

Provided to Builders Exchange of WA, Inc. For usage Conditions Agreement see www.bxwa.com - Always Verify Scal

(8) Eight New Double Sided Historic Board Signs
(Client will install)

*Provided art for historic boards will need to be provided with a .25" bleed around the perimeter of the panel for final production.

Note: Art to be provided by City before fabrication

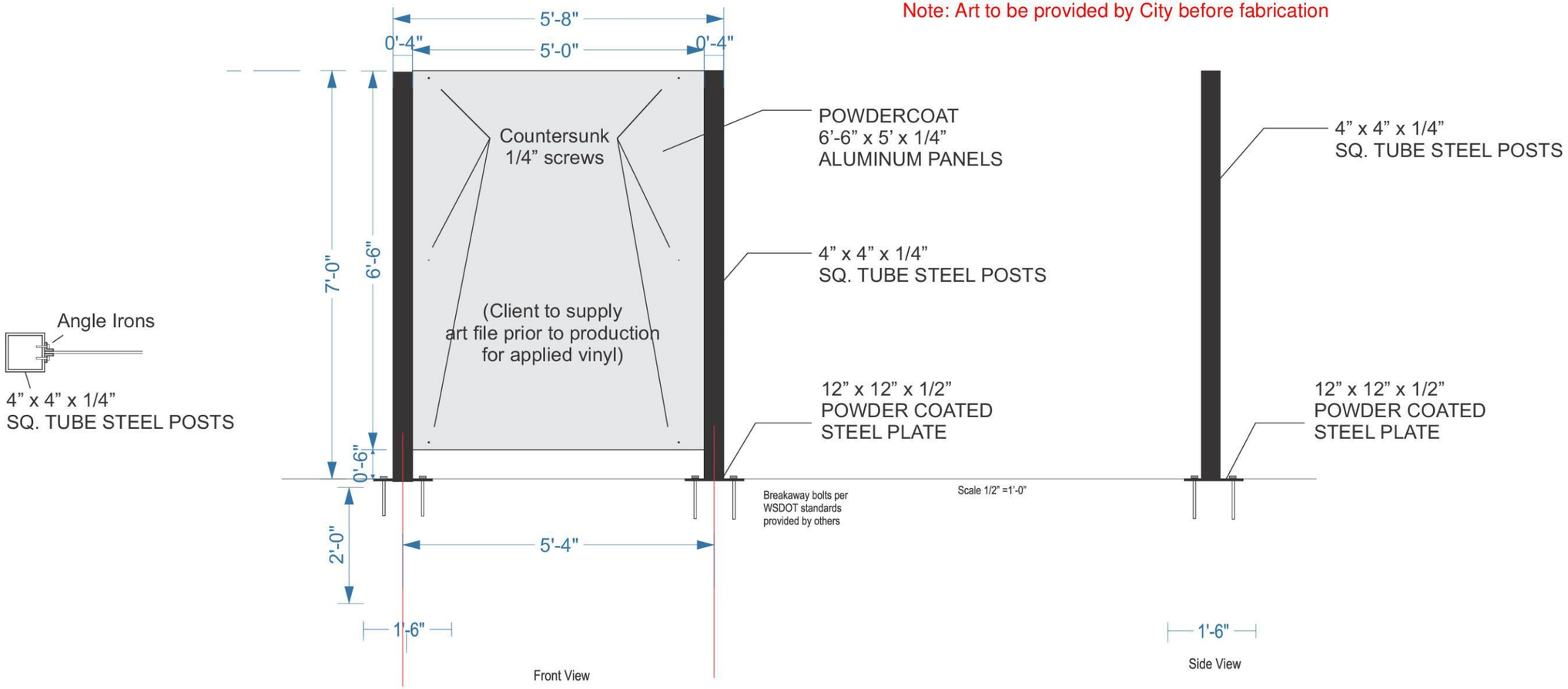

Color Key: Cardinal Powder Coat colors
Poles to be C206- BK266

Job Name: City of Stanwood	**Scale:**	**Designer:** L.C.
Site Address: Stanwood, WA	**Date:** 12.4.25 12.9.25 12.31.25	**Revised:** 1.26.26
Sales Rep.: M.A.	**File Name:** City of Stanwood sign layout	**Design #:** 11947
2608 Hwy 99 S. Mount Vernon, WA 98273 **Phone: (360) 424-1325 FAX: (360) 424-5212 WEB: www.meyersign.com**		

MEYER SIGN & ADVERTISING CO, INC

NOTE: This Color Drawing is a simulation of the proposed colors and should be verified with actual materials.	☐ APPROVED AS IS ☐ APPROVED W/ CHANGES AS MARKED
	NOTE: If this document has been e-mailed or faxed it may be out of scale.
© Meyer Sign & Advertising Co., Inc.	CLIENT APPROVAL
All Rights Reserved © 2026	DATE APPROVED *SIGNATURE*

Unauthorized use, reproduction, and or display shall render the infringer liable for up to $150,000 in Statutory Damages, plus attorneys fees and costs, for each infringement, under the U.S. Copyright Act [17U.S.C. 412 & 504]

Provided to Builders Exchange of WA, Inc. For usage Conditions Agreement see www.bxwa.com - Always Verify Scal

APPENDIX C
PERGOLA BENCH SWING DETAILS

Provided to Builders Exchange of WA, Inc. For usage Conditions Agreement see www.bxwa.com - Always Verify Scal

THOMAS STEELE DIVISION

GRABER MANUFACTURING, INC.
1080 UNIEK DRIVE
WAUNAKEE, WI 53597
P(800) 448-7931, P(608) 849-1080, F(608) 849-1081
WWW.MADRAX.COM, E-MAIL: SALES@MADRAX.COM

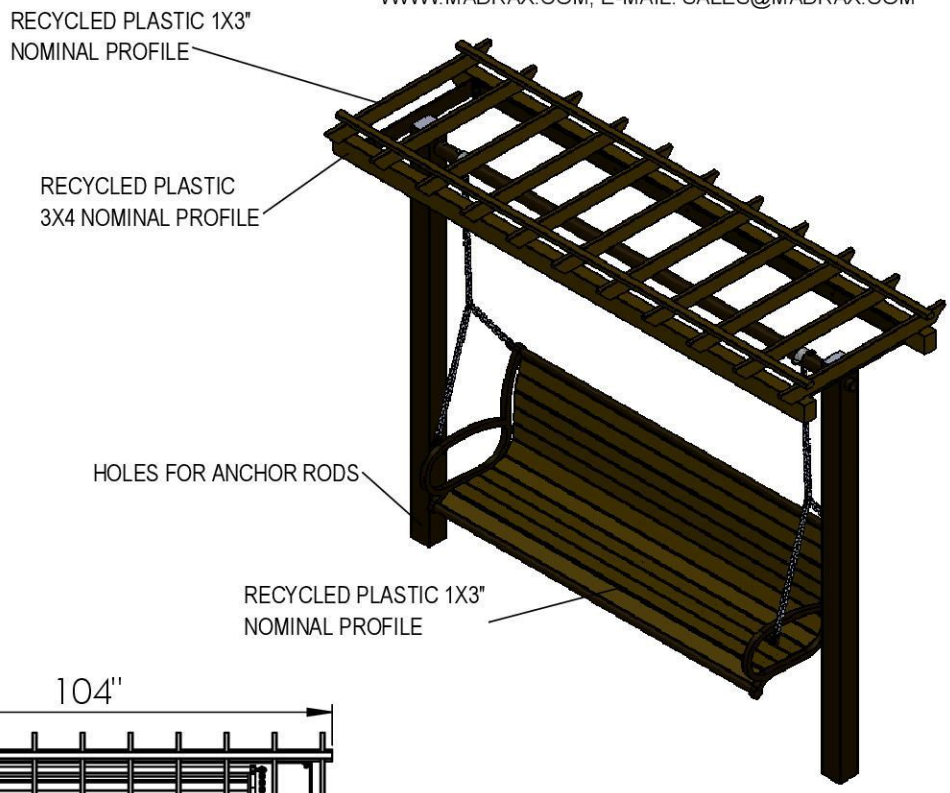

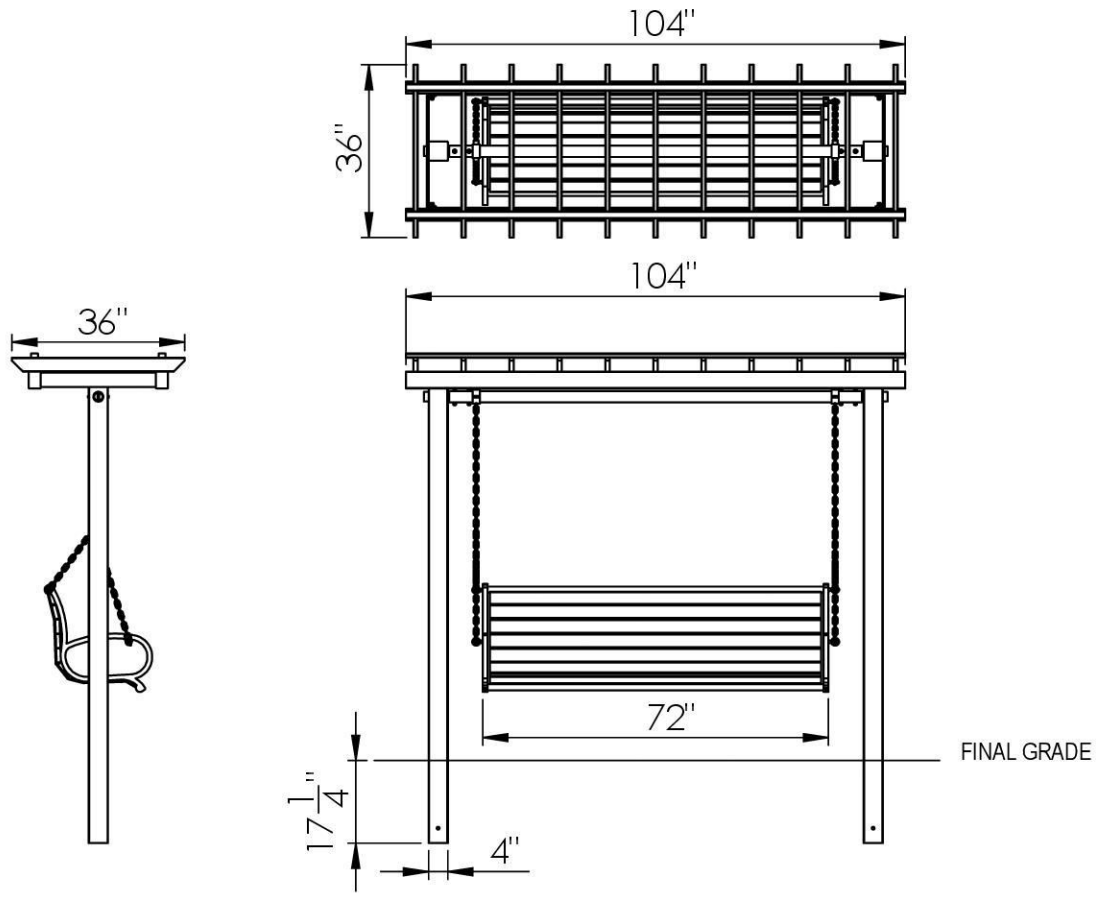

PRODUCT: LABS-6-RP-IG
DESCRIPTION: LANGDON SWING, RECYCLED PLASTIC , INGROUND MOUNT

DATE:7-11-2017
ENG: BLW

CONFIDENTIAL DRAWING AND INFORMATION IS NOT TO BE COPIED OR DISCLOSED TO OTHERS WITHOUT THE CONSENT OF GRABER MANUFACTURING, INC. SPECIFICATIONS ARE SUBJECT TO CHANGE WITHOUT NOTICE.

©2017 GRABER MANUFACTURING, INC. ALL PROPRIETARY RIGHTS RESERVED.

SITE FURNISHING IS POWDER COATED WITH TGIC POLYESTER. STEEL SURFACE PREP INCLUDES MECHANICAL AND CHEMICAL ETCHING FOLLOWED WITH A COATING TO IMPROVE ADHESION AND CORROSION RESISTANCE.

Provided to Builders Exchange of WA, Inc. For usage Conditions Agreement see www.bxwa.com - Always Verify Scal

THOMAS STEELE DIVISION

GRABER MANUFACTURING, INC.
1080 UNIEK DRIVE
WAUNAKEE, WI 53597
P(800) 448-7931, P(608) 849-1080, F(608) 849-1081
WWW.MADRAX.COM, E-MAIL: SALES@MADRAX.COM

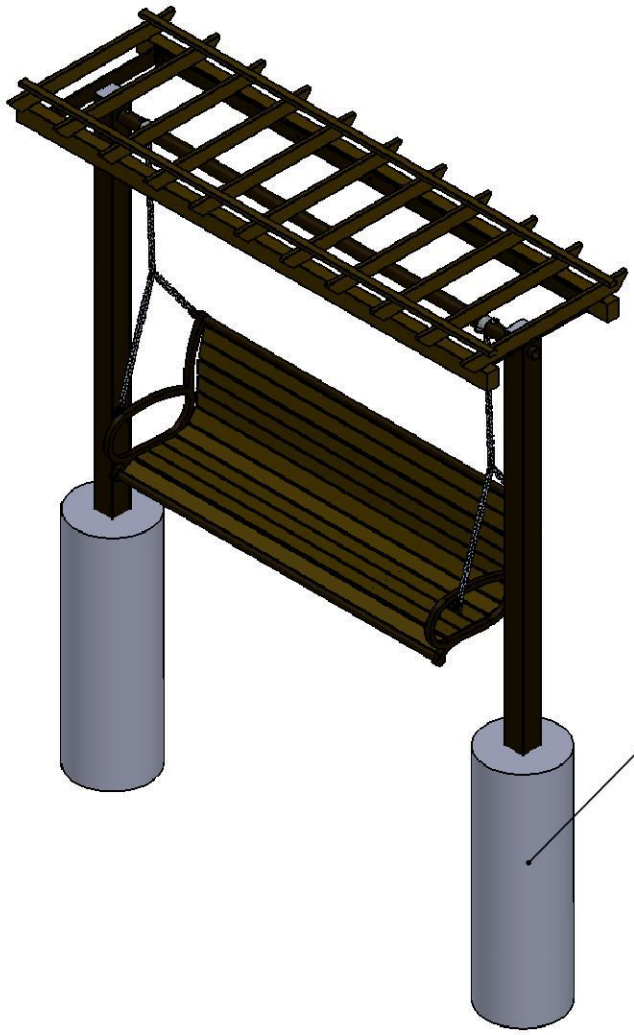

PRODUCT: LABS-6-RP-IG
DESCRIPTION: LANGDON SWING, RECYCLED PLASTIC , INGROUND MOUNT

DATE:7-11-2017
ENG: BLW

CONFIDENTIAL DRAWING AND INFORMATION IS NOT TO BE COPIED OR DISCLOSED TO OTHERS WITHOUT THE CONSENT OF GRABER MANUFACTURING, INC. SPECIFICATIONS ARE SUBJECT TO CHANGE WITHOUT NOTICE.

©2017 GRABER MANUFACTURING, INC. ALL PROPRIETARY RIGHTS RESERVED.

SITE FURNISHING IS POWDER COATED WITH TGIC POLYESTER. STEEL SURFACE PREP INCLUDES MECHANICAL AND CHEMICAL ETCHING FOLLOWED WITH A COATING TO IMPROVE ADHESION AND CORROSION RESISTANCE.

Provided to Builders Exchange of WA, Inc. For usage Conditions Agreement see www.bxwa.com - Always Verify Scal

APPENDIX D
WATER FOUNTAIN DETAILS

Provided to Builders Exchange of WA, Inc. For usage Conditions Agreement see www.bxwa.com - Always Verify Scal

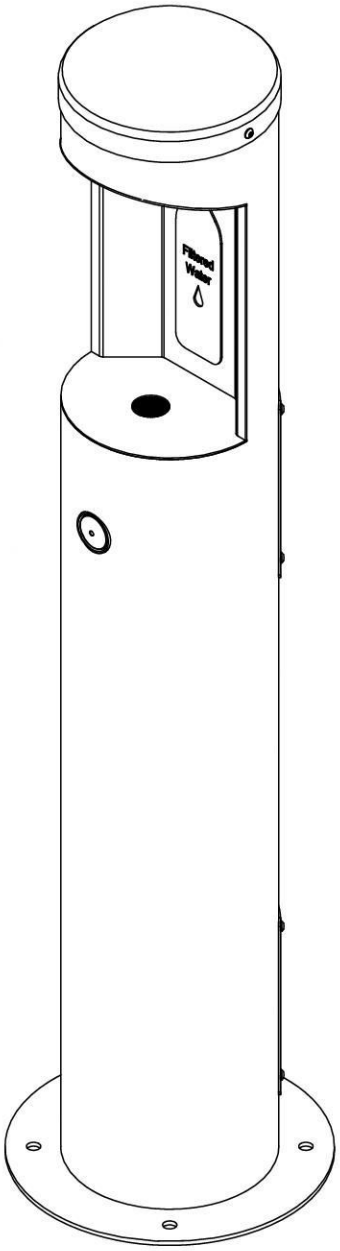

Single Station Bottle Filler

Installation & Operation Manual

Outdoor Bottle Fillers

Table of Contents

Pre-Installation Information....2
Standard Bottle Filler Configurations....3
Physical Dimensions....4
Rough-in Dimensions....5
Required Installation Supplies....6
Parts List and Exploded-view Drawings....7
Hardware Identification....11
Installation Instructions....
Step 1: Fixture Installation....12
Step 2: Adjusting Drinking Spout Flow....13
Care and Maintenance....14
Troubleshooting....
Fixture Plumbing....15
Drawings....
Physical Dimensions....16
Rough-in Dimensions....19
Push Button Detail....22

MADE IN THE **U.S.A.**

Rev. 04/2023

Provided to Builders Exchange of WA, Inc. For usage Conditions Agreement see www.bxwa.com - Always Verify Scal

Pre-Installation Information

Installation notice!

Check Rough-In location **PRIOR** to installation

Flush lines thoroughly **PRIOR** to hook-up

When installing the **Outdoor Bottle Filler** system:

Before Step 1 of the installation instructions, ensure that rough-ins are in the correct location.

The valve assembly, including the spray head, **MUST NOT BE** connected until *after* all lines have been flushed to remove the small particles of debris that are inherent with new construction projects and all chemicals that are used in flushing are purged from the system.

Chemicals used in flushing plumbing systems can attack the internal components of the valve and spray head and severely damage them, so any flushing of the system must be followed by a full flushing with pure water to clear any harsh chemicals remaining in the system. Debris in the system if allowed to enter the valve assembly and spray head can cause poor performance or outright failure.

Again **DO NOT** attempt to connect the valve assembly and spray head until *after* all flushing is complete and pure water is the only media that will be passing through the system. Damage to the valve assembly or spray head caused by harsh chemicals or debris will not be covered by the manufacturer's warranty.

Any fittings provided by the installer should be made of plastic to electrically isolate the unit from the building or connected plumbing system.

The grounding of electric equipment such as telephones, computers, etc, to water lines is a common procedure. This grounding can cause electrical feedback into a water fountain or similar fixture, causing electrolysis, which results in a metallic taste or an increase in the metal content of the water. This can easily be avoided by using the proper materials as indicated.

Installation notice!

Check Rough-In location **PRIOR** to installation

Flush lines thoroughly **PRIOR** to hook-up

Standard Bottle Filler Configurations-

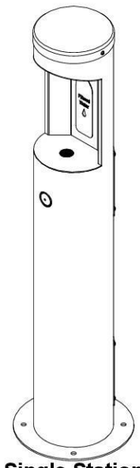

Single Station Bottle Filler

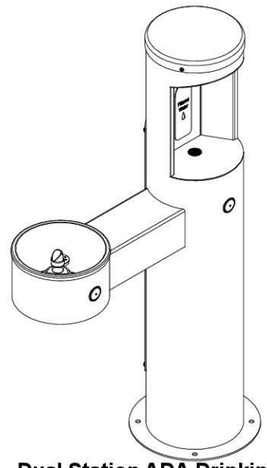

Dual Station ADA Drinking Fountain and Bottle Filler

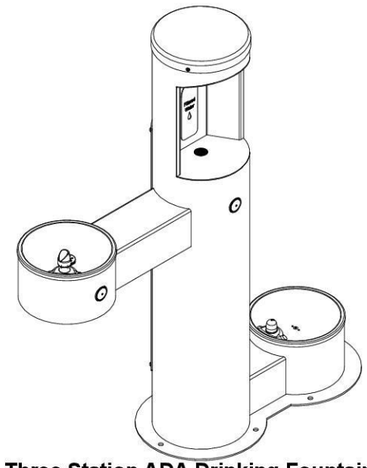

Three Station ADA Drinking Fountain, Pet Fountain and Bottle Filler

Provided to Builders Exchange of WA, Inc. For usage Conditions Agreement see www.bxwa.com - Always Verify Scal

Physical Dimensions- Single Station

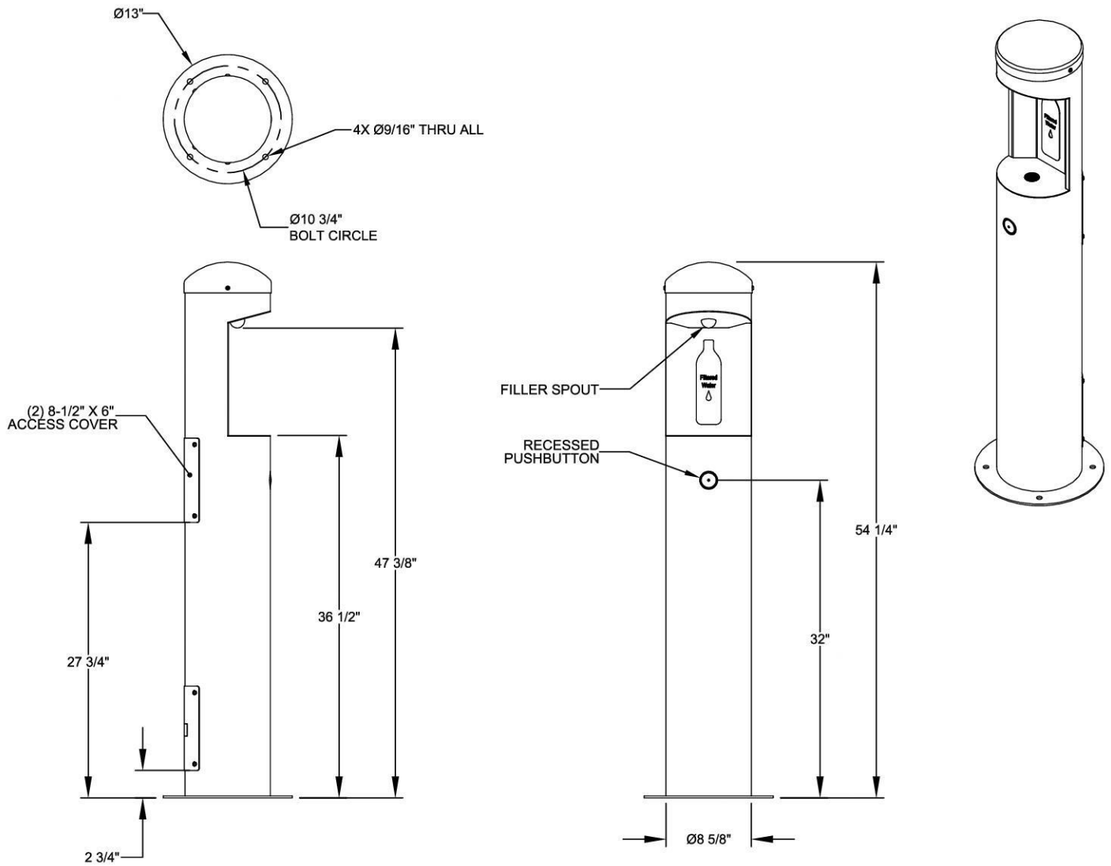

Rough-In Dimensions- Single Station

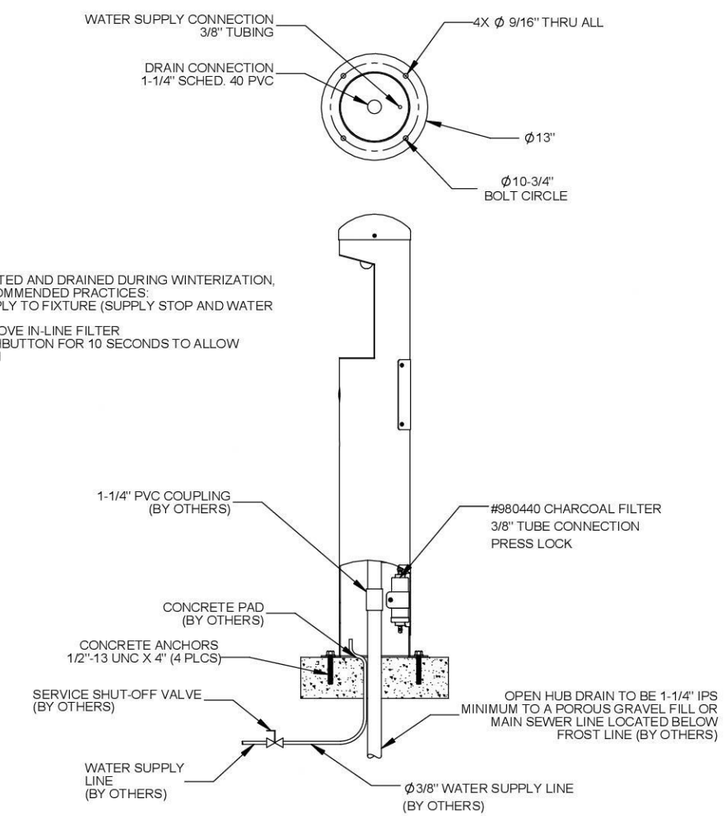

NOTE:
UNIT MUST BE DISCONNECTED AND DRAINED DURING WINTERIZATION, PER THE FOLLOWING RECOMMENDED PRACTICES:

- SHUT OFF WATER SUPPLY TO FIXTURE (SUPPLY STOP AND WATER LINES BY OTHERS)
- DISCONNECT AND REMOVE IN-LINE FILTER
- PRESS AND HOLD PUSHBUTTON FOR 10 SECONDS TO ALLOW WATER LINES TO DRAIN

Provided to Builders Exchange of WA, Inc. For usage Conditions Agreement see www.bxwa.com - Always Verify Scal

Required Installation Supplies

- Proper mounting hardware
- Proper plastic fittings as indicated
- Hardware for waste oulet connections
- Gasket for waste outlet connection
- Shims (for installation if necessary)
- Supply piping
- Silicone caulk
- Plumbers putty

Parts List and Exploded-view Drawing- Single Station Bottle Filler

ITEM #	PART #	DESCRIPTION	QTY.
1	380063	LIGATURE-RESISTANT BOTTLE FILLER BUBBLER	1
2	600612N	HEXNUT, 3/4"-14 NPSM	1
3	320575	ELBOW, 3/8" NPTF MALE X 1/4" TUBE PUSH-TO-CONNECT	1
4	600471-24A	TUBING, 1/4" OD X 0.17" ID X 24" LONG	1
5	4500NSS	SCREW, SEC(BH), S/S, 1/4-20 x 1/2"	10
6	S200141	ACCESS COVER FOR CWBF-1, 6.125" x 8.5"	1
7	600315	VALVE ASSEMBLY, ADJUSTABLE PUSHBUTTON	1
8	600471-36	TUBING, 1/4" OD X 0.17" ID X 36" LONG	1
9	600635N	CARRIAGE BOLT, 1/4"-20 X 2-1/2"	1
10	600613N	HEX NUT, 1/4"-20, STAINLESS STEEL	7
11	S200152	ACCESS COVER ASSY FOR CWBF-1	1
12	320573	REDUCER, 3/8" STEM X 1/4" TUBE	1
13	980440	CHARCOAL FILTER, 3/8" TUBING CONNECTIONS	1
14	320279-18	PVC PIPE, 1 1/4" SCHED 40 X 18" LONG	1
15	320281	ELBOW, 22.5°, 1-1/4" FEMALE UNTHREADED SOCKET ENDS	2
16	320279-5.156	PVC PIPE, 1 1/4" SCHED 40 X 5.156" LONG	1
17	320279-3	PVC PIPE, 1 1/4" SCHED 40 X 3" LONG	1
18	320283	PVC THREADED ADAPTER, 1 1/4"	1
19	S200135	DRAIN BOX ASSY FOR CWBF-1	1
20	S200142	DRAIN SCREEN FOR CWBF-1	1
21	S200150	WELDED BODY ASS'Y - CWBF-1-RPB	1
22	S200129	BODY CAP, Ø8.625"	1
23	S200035	PLACARD FOR CWBF SERIES	1

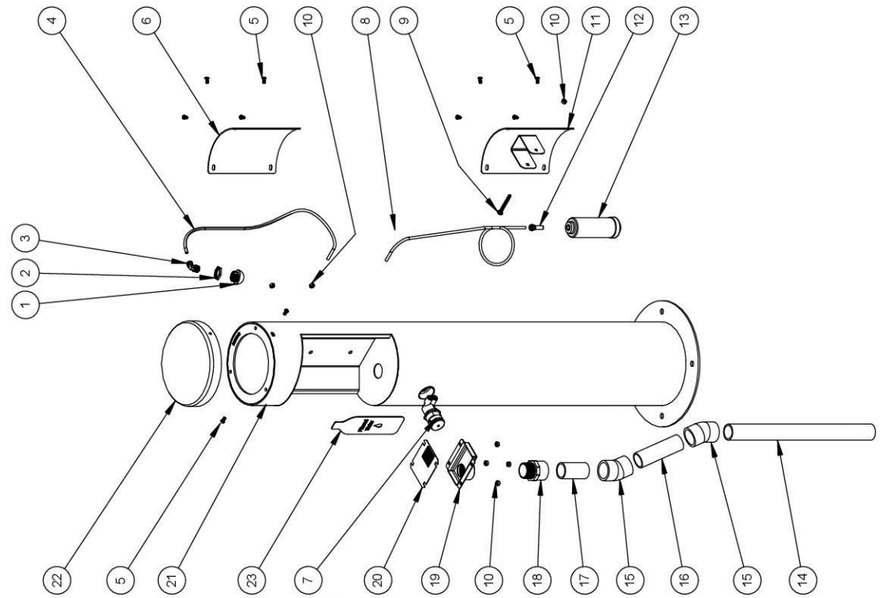

Provided to Builders Exchange of WA, Inc. For usage Conditions Agreement see www.bxwa.com - Always Verify Scal

Parts List and Exploded-view Drawing- Dual Station Bottle Filler

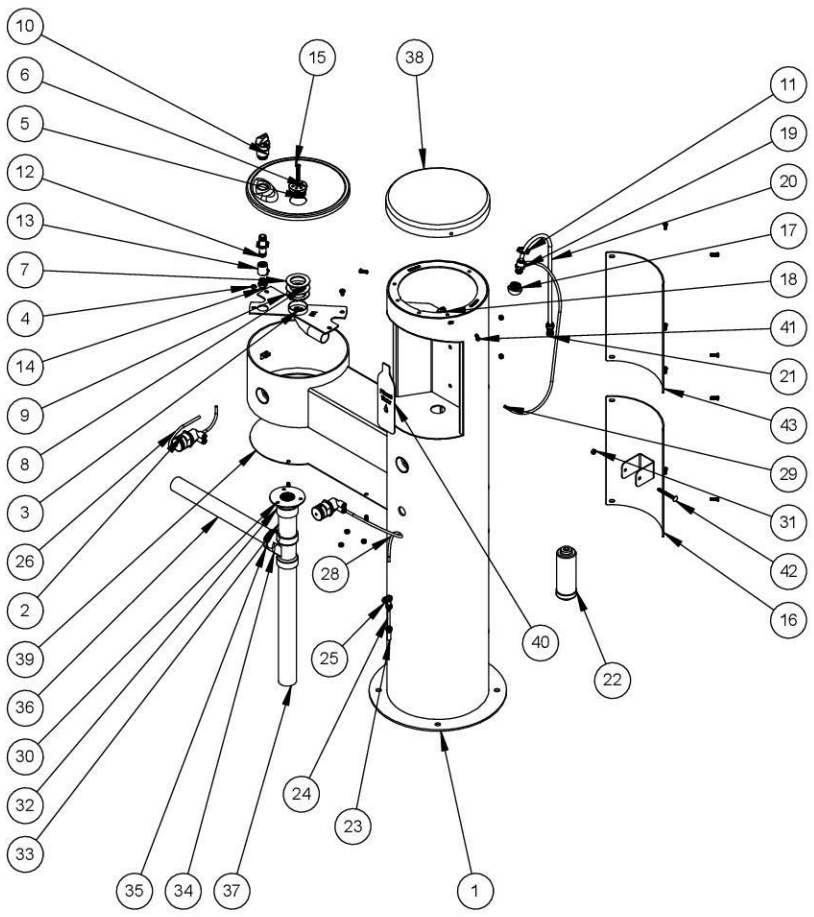

ITEM #	PART #	DESCRIPTION	QTY.
1	S200627	WELDED BODY ASS'Y - CWBF-2FA-RPB-HC	1
2	600315	VALVE ASSEMBLY, ADJUSTABLE PUSHBUTTON	2
3	S200517L	LEFT HAND FRONT APPROACH SUPPORT ASSEMBLY w/DRAIN ELBOW	1
4	800144	SCREW, PHILLIP (TH), S/S, 1/4-20 X 1/2" TRUSS HEAD	3
5	S200033	ADA BOWL, 40-DEG, 1-3/4" DEPTH	1
6	380301	DRAIN, ODF, 2" O.D., STAINLESS STEEL	1
7	380274	GASKET, 1-1/2" DRAIN	1
8	380273	DRAIN WASHER, 1-5/8"	1
9	600043	NUT, 1 5/8"-12 THD FOR 1-1/2" DRAIN	1
10	600585	BUBBLER, DRINKING FOUNT, DECK MOUNTED, COMMERCIAL	1
11	600612N	HEXNUT, 3/4"-14 NPSM	2
12	320469	NIPPLE, 3/8" NPT X 2.5" LONG	1
13	320091	COUPLING, 3/8" FPT STAINLESS STEEL	1
14	320437	ADAPTER, 3/8" NPTF MALE X 1/4" TUBE PUSH-TO-CONNECT	1
15	4509SSN	1/4"-20 x 2" FH SECURITY SCREW	1
16	S200163	FILTER ACCESS COVER ASS'Y FOR CWBF-2 / CWBF-3	1
17	380063	LIGATURE-RESISTANT BOTTLE FILLER BUBBLER	1
18	320575	ELBOW, 3/8" NPTF MALE X 1/4" TUBE PUSH-TO-CONNECT	1
19	320400	TUBE FITTING, ADAPTOR, 3/8 TUBE X 3/8 NPT	1
20	600523	TUBING, 3/8" O.D. X 1/4" I.D. X 18 LONG	1
21	320448	TUBE FITTING, PTC UNION, 3/8IN	1
22	980440	CHARCOAL FILTER, 3/8" TUBING CONNECTIONS	1
23	320573	REDUCER, 3/8" STEM X 1/4" TUBE	1
24	600471-2	TUBING, 1/4" OD X 0.17" ID X 2" LONG	1
25	320438	TEE, 1/4" PUSH-TO-CONNECT	1
26	600471-18	TUBING, 1/4" OD X 0.17" ID X 18" LONG	1
27	600471-48	TUBING, 1/4" OD X 0.17" ID X 48" LONG	1
28	600471-32	TUBING, 1/4" 0D X 0.17" ID X 32" LONG	1
29	600471-24B	TUBING, 1/4" OD X 0.17" ID X 24" LONG	1
30	S200116	BOTTLE FILLER DRAIN ASS'Y	1
31	600613N	HEX NUT, 1/4"-20, STAINLESS STEEL	6
32	320284	PVC THREADED ADAPTER, 1-1/2"	1
33	320280-4.25	PVC PIPE, 1-1/2" SCHED. 40 X 4-1/4" LONG	1
34	320282	CLEANOUT TEE, 1-1/2" PVC	1
35	320286	BARB ADAPTER, 1-1/2" MIP X 1-1/4" PVC	1
36	320288-14	NYLABRAID REINFORCED VINYL TUBING, 1-1/4" X 14" LONG	1
37	320280-16	PVC PIPE, 1-1/2" SCHED. 40 X 16" LONG	1
38	S200113M	CAP, WSF, 10-3/4"	1
39	S200075	OUTER BOTTOM COVER - ADA / CHILD	1
40	S200035	PLACARD FOR CWBF SERIES	1
41	4502SSN	SCREW, 1/4-20 x 3/4 SECURITY SCREW (BH)	16
42	600635N	CARRIAGE BOLT, 1/4"-20 X 2-1/2"	1
43	S200076	ACCESS COVER - 14" X 8-1/2"	1

Exploded-view Drawing- Three Station Bottle Filler

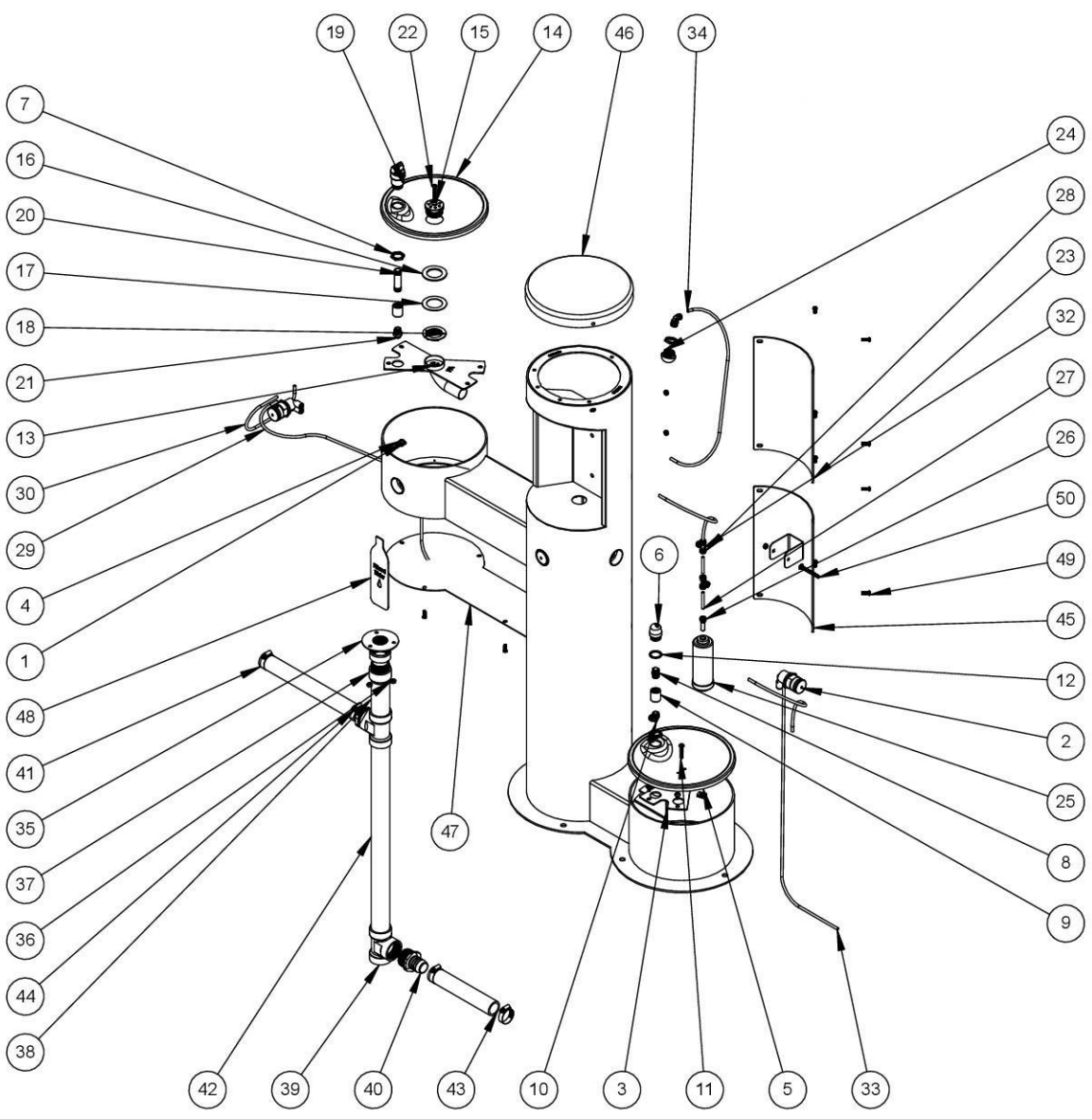

Provided to Builders Exchange of WA, Inc. For usage Conditions Agreement see www.bxwa.com - Always Verify Scal

Parts List- Three Station Bottle Filler

ITEM #	PART #	DESCRIPTION	QTY.
28	320438	TEE, 1/4" PUSH-TO-CONNECT	2
29	600471-48	TUBING, 1/4" OD X 0.17" ID X 48" LONG	1
30	600471-18	TUBING, 1/4" OD X 0.17" ID X 18" LONG	1
31	600471-32	TUBING, 1/4" OD X 0.17" ID X 32" LONG	1
32	600471-32	TUBING, 1/4" OD X 0.17" ID X 32" LONG	1
33	600471-35	TUBING 1/4"OD x .170"ID X 35" LONG	1
34	600471-24B	TUBING, 1/4" OD X 0.17" ID X 24" LONG	1
35	S200116	BOTTLE FILLER DRAIN ASSY	1
36	600613N	HEX NUT, 1/4"-20, STAINLESS STEEL	6
37	320284	PVC THREADED ADAPTER, 1-1/2"	1
38	320280-4.75	PVC PIPE, 1-1/2" SCHED. 40 X 4.3/4" LONG	1
39	320282	CLEANOUT TEE, 1-1/2" PVC	2
40	320286	BARB ADAPTER, 1-1/2" MIP X 1-1/4" PVC	2
41	320288-14	NYLABRAID REINFORCED VINYL TUBING, 1-1/4" X 14" LONG	1
42	320280-24.625	PVC PIPE, 1-1/2" SCHED. 40 X 24-5/8" LONG	1
43	320288	NYLABRAID REINFORCED VINYL TUBING, 1-1/4" X 8.75" LONG	1
44	980817	WORM GEAR PIPE CLAMP, 2"	4
45	S200163	FILTER ACCESS COVER ASS'Y FOR CWBF-2 / CWBF-3	1
46	S200113M	CAP, WSF, 10-3/4"	1
47	S200075	OUTER BOTTOM COVER - ADA / CHILD	1
48	S200035	PLACARD FOR CWBF SERIES	1
49	4502SSN	SCREW, 1/4-20 x 3/4 SECURITY SCREW (BH)	16
50	600635N	CARRIAGE BOLT, 1/4"-20 X 2-1/2"	1

ITEM #	PART #	DESCRIPTION	QTY.
1	S200512	WELDED BODY - CWBF-3FA-RPB-HC-PET FRONT APPROACH	1
2	600315	VALVE ASSEMBLY, ADJUSTABLE PUSHBUTTON	3
3	S200034	RECEPTOR SUPPORT ASSEMBLY w/DRAIN ELBOW	1
4	800144	SCREW, PHILLIP (TH), S/S, 1/4-20 X 1/2" TRUSS HEAD	6
5	S200237	PET BOWL - 1-3/4" DEPTH	1
6	380056	(PBB) 30 DEG. PET BOWL BUBBLER	1
7	600612N	HEXNUT, 3/4"-14 NPSM	3
8	320478	NIPPLE 3/8" x 1.0" T304 SS	1
9	320091	COUPLING, 3/8" FPT STAINLESS STEEL	2
10	320575	ELBOW, 3/8" NPTF MALE X 1/4" TUBE PUSH-TO-CONNECT	2
11	800125	SCREW, SEC(BH), S/S, 1/4-20 X 1-1/2"	1
12	S200290	SPACER, BUBBLER MOUNTING	1
13	S200517L	LEFT HAND FRONT APPROACH SUPPORT ASSEMBLY W/PET BOWL	1
14	S200033	ADA BOWL, 40 DEG, 1-3/4" DEPTH	1
15	380301	DRAIN, ODF, 2" O.D., STAINLESS STEEL	1
16	380274	GASKET, 1-1/2" DRAIN	1
17	380273	DRAIN WASHER, 1-5/8"	1
18	600043	NUT, 1 5/8"-12 THD FOR 1-1/2" DRAIN	1
19	600585	BUBBLER, DRINKING FOUNT, DECK MOUNTED, COMMERCIAL	1
20	320469	NIPPLE, 3/8" NPT X 2.5" LONG	1
21	320437	ADAPTER, 3/8" NPTF MALE X 1/4" TUBE PUSH-TO-CONNECT	1
22	4509SSN	1/4"-20 x 2" FH SECURITY SCREW	1
23	S200076	ACCESS COVER - 1/4" X 8-1/2"	1
24	380063	LIGATURE-RESISTANT BOTTLE FILLER BUBBLER	1
25	980440	CHARCOAL FILTER, 3/8" TUBING CONNECTIONS	1
26	320573	REDUCER, 3/8" STEM X 1/4" TUBE	1
27	600471-2	TUBING, 1/4" OD X 0.17" ID X 2" LONG	2

Hardware Identification Chart



1/4-20 x 1/2"
SECURITY SCREW
4500NSS



1/4-20 x 1"
SECURITY SCREW
800114

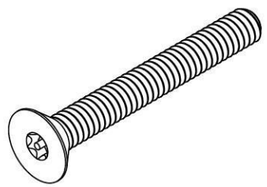

1/4"-20 x 2"
FLAT HEAD SECURITY SCREW
4509SSN

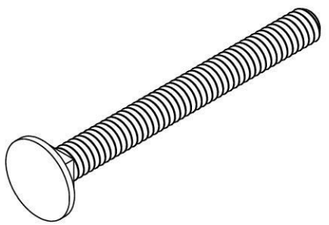

1/4"-20 x 2-1/2"
CARRIAGE BOLT
600635N



1/4"-20 HEX NUT
600613N

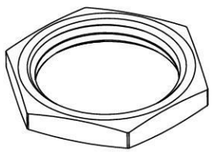

3/4" NPT
BRASS LOCKNUT
600612N

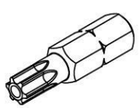

T27
1/4" PINNED TORX BIT
800115

Provided to Builders Exchange of WA, Inc. For usage Conditions Agreement see www.bxwa.com - Always Verify Scal

Installation Instructions

Step 1: Fixture Installation

Note: the outdoor bottle filler is to be mounted on a flat, level surface (concrete or otherwise) with an adequate support structure.

Note: refer to Rough-In Dimensions for locating plumbing connections.

1.) Install service shut-off valve in water supply line (valve not furnished).

2.) Locate and install bottle filler using 1/2"-13 x 4" stainless steel concrete anchors.

3.) As noted previously, flush the water supply line with clean drinking water before making final connections to the drinking fountain.

4.) Connect water supply line to inline strainer inside drinking fountain using 3/8" plastic tubing (extra tubing not furnished). Push tube straight into fitting on filter about 3/4" until it reaches a positive stop. Water supply connection must comply with local codes.

5.) Connect the drain line to drainage system. Drain is to be 1-1/2" IPS minimum to a porous gravel fill or main sewer line located below frost line. Installer to provide waste trap downstream of drain connection. Drain and waste trap must comply with local codes.

6.) Turn on water supply and check both the water supply lines and drain lines for leaks.

Installation Instructions (cont.)

Step 2: Adjusting Drinking Fountain Flow

1.) Insert a standard flat-head screwdriver into adjustment opening on face of pushbutton, as shown.

2.) Rotate screwdriver to adjust until desired flow is achieved:

Rotate clockwise to increase flow.
Rotate counterclockwise to decrease flow.

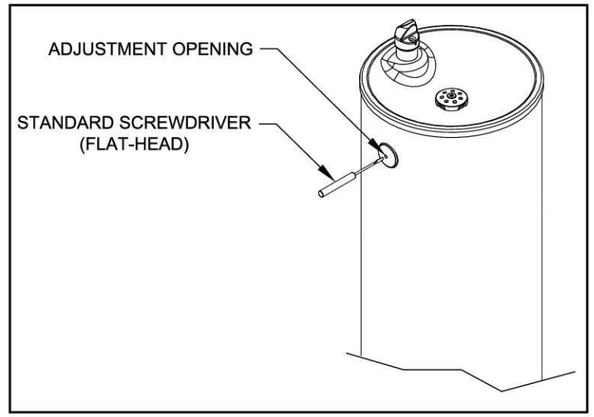

(Drinking Fountain shown)

Provided to Builders Exchange of WA, Inc. For usage Conditions Agreement see www.bxwa.com - Always Verify Scal

Care and Maintenance

Unit Care

Outdoor Drinking Fountains are not freeze resistant. The unit should be disconnected or shut off from the water supply and drained during the colder months. For more information, refer to the rough-in detail.

In order to ensure adequate flow and cleanliness of water, the inlne strainer in the supply line should be cleaned or replaced regularly. New inline strainers can be ordered using Part No. 980632.

Stainless Steel Care

Stainless Steels are basically alloys of iron and chromium and are corrosion resistant. Stainless steel has a bright surface that is easy to clean and is free from oxides. Therefore, cleaning of stainless steel is relatively simple and easy if done on a regular basis.

Frequency of cleaning should depend on the rate at which the fixture becomes dirty. Remember that fresh (soft) deposits of all kinds are relatively easy to remove, while removing older (hard) deposits are much more difficult. Establish a cleaning SCHEDULE.

Routine cleaning should involve ordinary soap or detergent and water, applied with a sponge, brush or cloth. Baking soda, borax or any of several non-abrasive commercial cleansing agents can help hasten the cleaning action. After scrubbing, rinse THOROUGHLY and wipe dry.

DO NOT use common steel wool, scouring pads, scrapers, wire brushes, files or other steel tools to clean stainless steel. Such items will scratch the surface or leave small particles of iron imbedded in the surface, which will eventually rust and stain the surface - even appearing as if the stainless itself was rusting.

Certain chemical compounds, if used on stainless steel, can give the appearance of rust and if allowed to stand for long periods of time, can pit the surface of even stainless. Products containing hydrochloric acid, muriatic acid or potassium hydrochloride can ruin the surface.

Troubleshooting

I. Insufficient Flow
   A. Ensure the service shut-off valve is fully open (provided by installer).
   B. Ensure water supply is within the normal operating range of 40-60 psi.
      1. If pressure is too low, flow can be drastically reduced.
      2. If pressure is too high, the strainer and/or valve may have been damaged.
      3. The unit is rated for a maximum range of 30-105 psi.
   C. Inspect the unit's valve for damage, and replace if necessary.
   D. Inspect the inline strainer for damage and/or clogging, and clean or replace as necessary.
   E. Check all fittings and tubing for damage and leaks. Replace components as necessary.

II. Unit has problems draining
   A. Remove and clean the drain screen.
   B. Remove any debris from the drain.
   C. Remove any debris from the PVC pipe and fittings.
   D. Check and clear the waste trap (provided by installer).

Provided to Builders Exchange of WA, Inc. For usage Conditions Agreement see www.bxwa.com - Always Verify Scal

DRAWING: Physical Dimensions Single Station

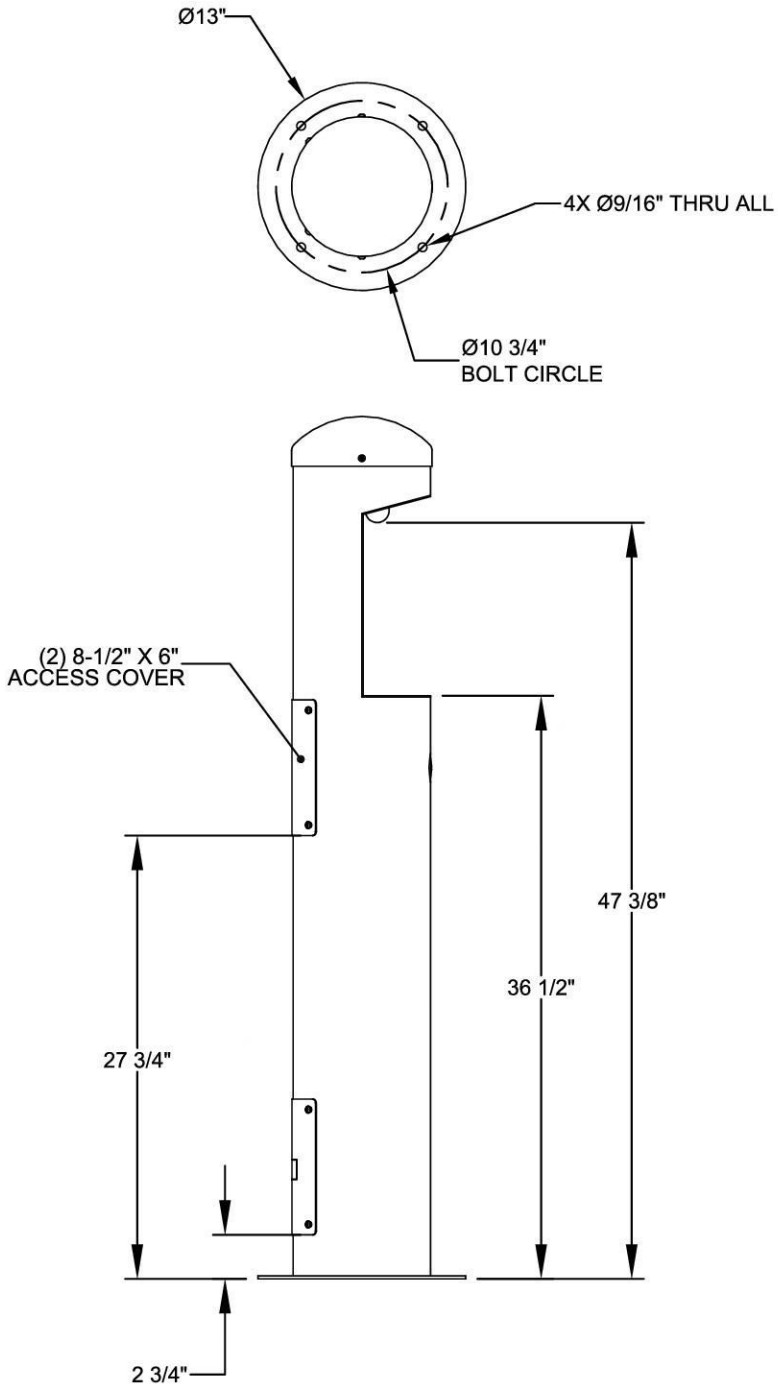

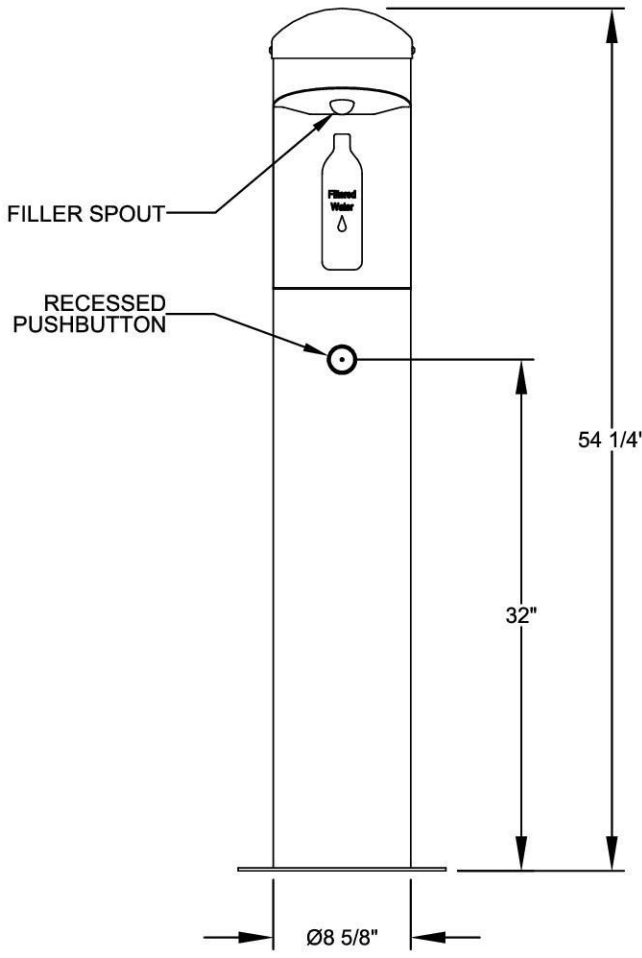

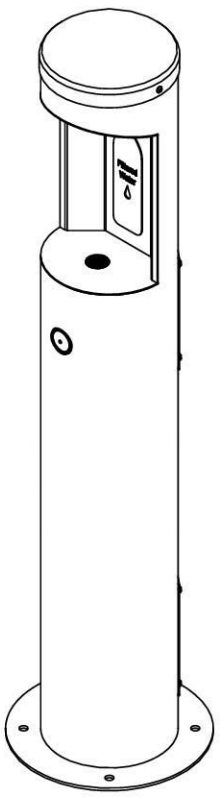

DRAWING: Physical Dimensions Dual Station

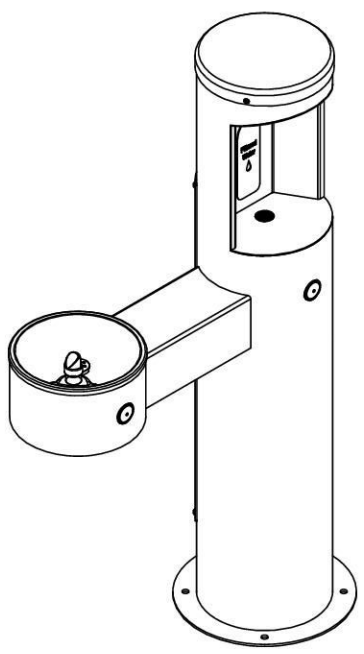

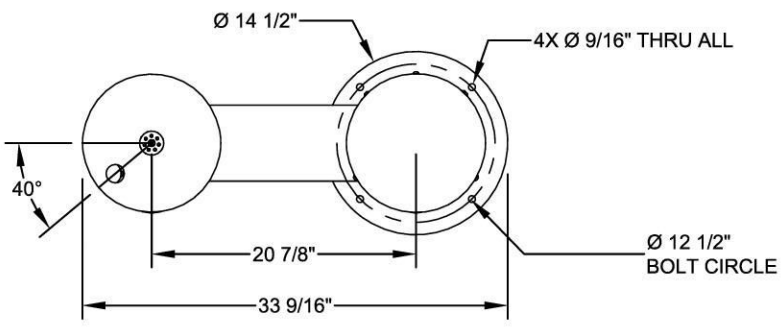

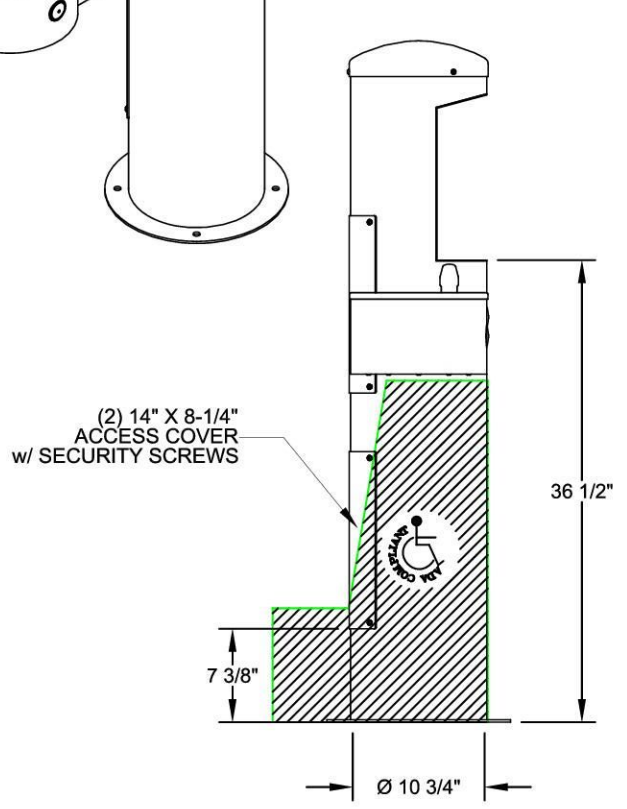

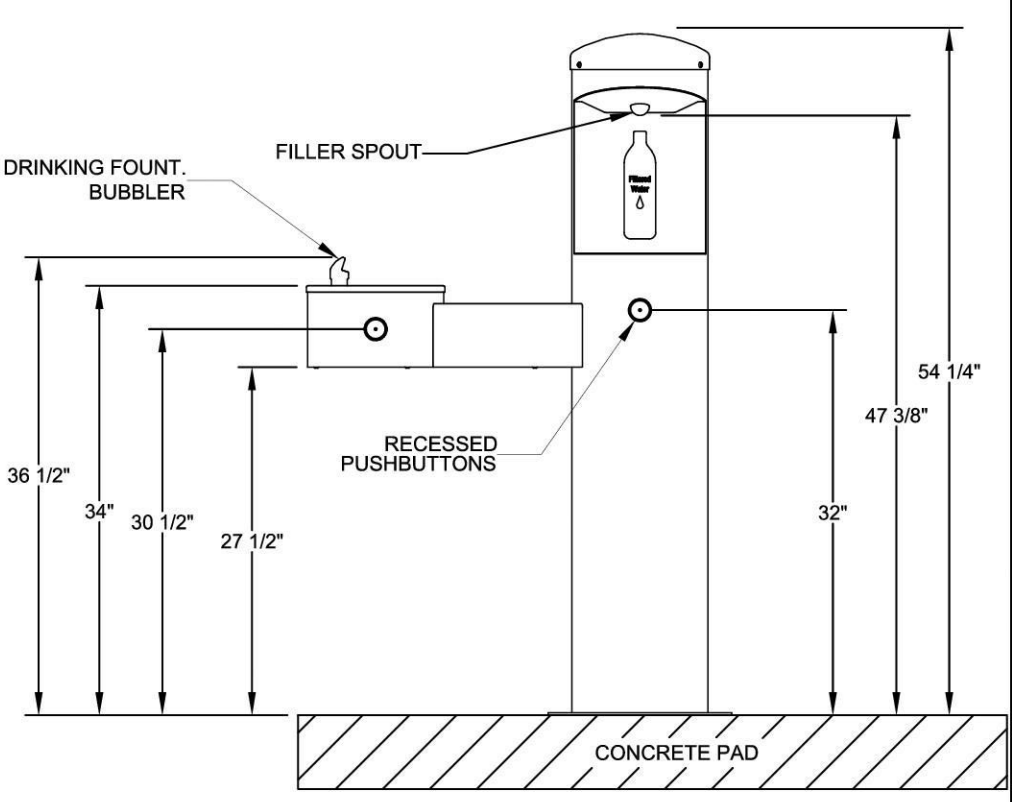

Provided to Builders Exchange of WA, Inc. For usage Conditions Agreement see www.bxwa.com - Always Verify Scal

DRAWING: Physical Dimensions Three Station

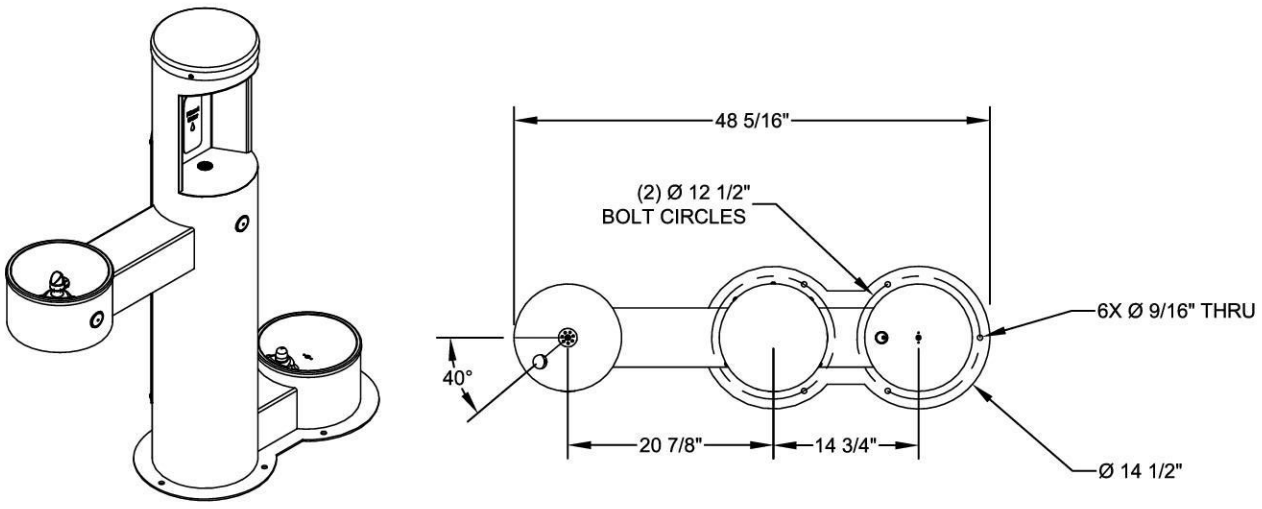

DRAWING: Rough-in Dimensions Single Station

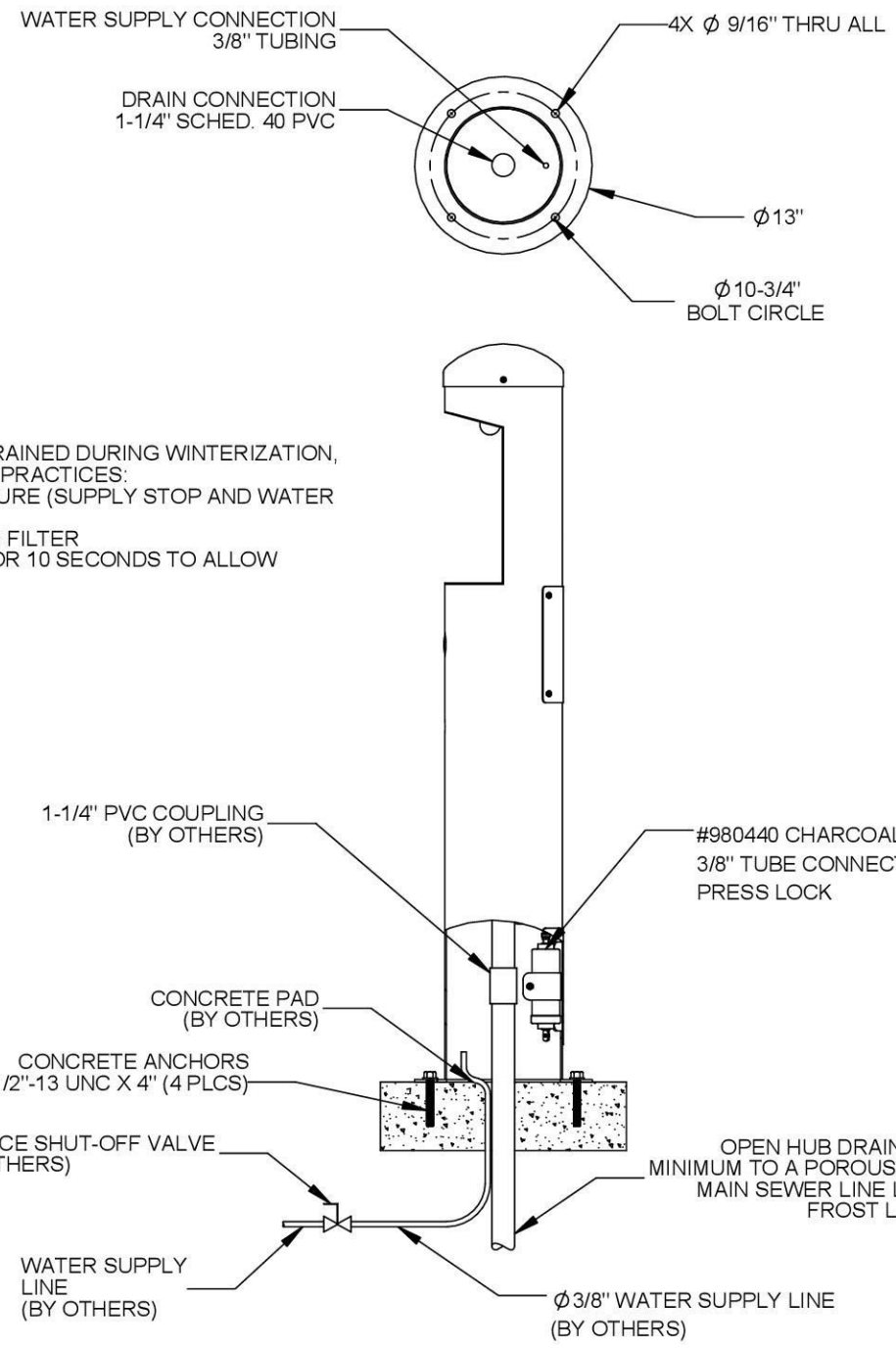

Provided to Builders Exchange of WA, Inc. For usage Conditions Agreement see www.bxwa.com - Always Verify Scal

DRAWING: Rough-in Dimensions Dual Station

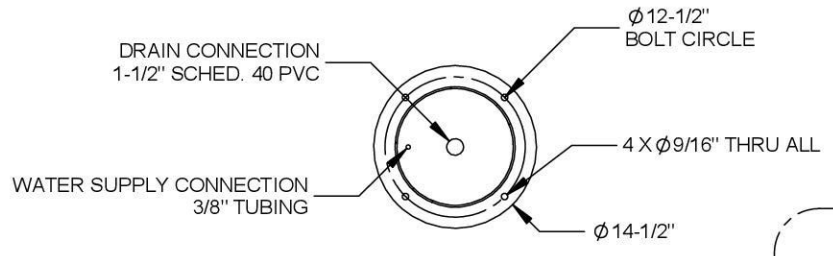

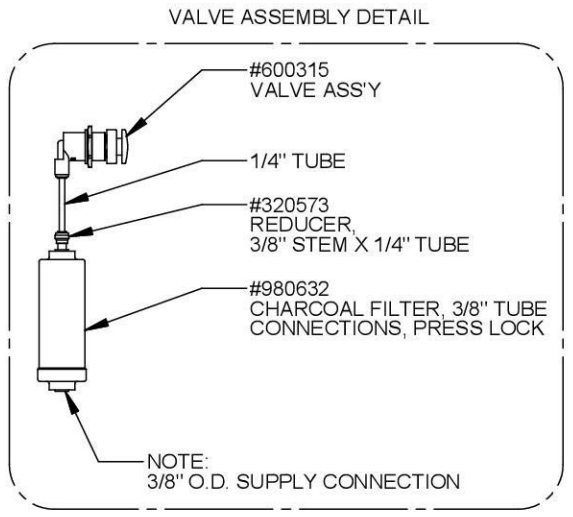

NOTE:
UNIT MUST BE DISCONNECTED AND DRAINED DURING WINTERIZATION, PER THE FOLLOWING RECOMMENDED PRACTICES:
- SHUT OFF WATER SUPPLY TO FIXTURE (SUPPLY STOP AND WATER LINES BY OTHERS)
- DISCONNECT AND REMOVE IN-LINE FILTER
- PRESS AND HOLD PUSHBUTTON FOR 10 SECONDS TO ALLOW WATER LINES TO DRAIN

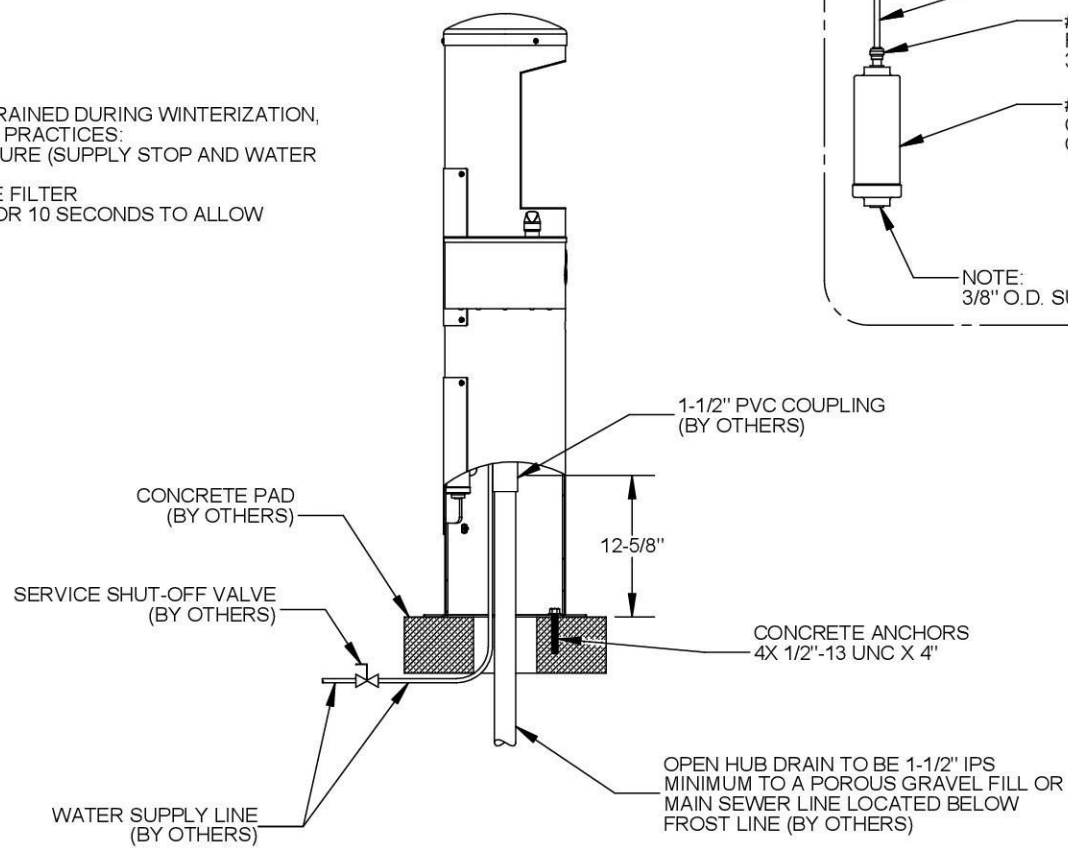

DRAWING: Rough-in Dimensions Three Station

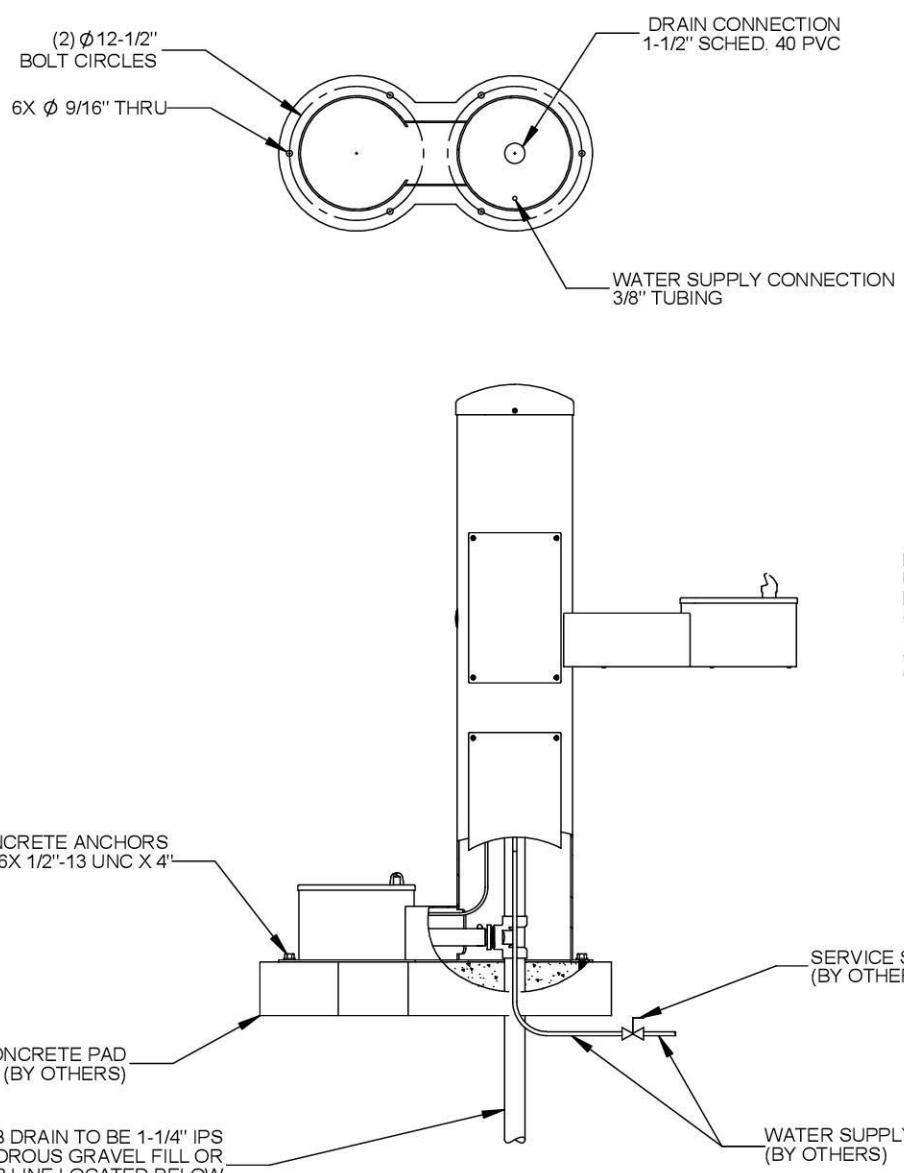

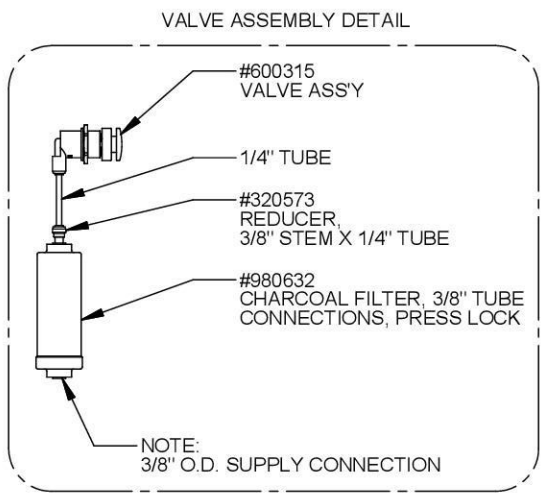

NOTE:
UNIT MUST BE DISCONNECTED AND DRAINED DURING WINTERIZATION, PER THE FOLLOWING RECOMMENDED PRACTICES:
- SHUT OFF WATER SUPPLY TO FIXTURE (SUPPLY STOP AND WATER LINES BY OTHERS)
- DISCONNECT AND REMOVE IN-LINE STRAINER/FILTER
- PRESS AND HOLD PUSHBUTTON FOR 10 SECONDS TO ALLOW WATER LINES TO DRAIN

Provided to Builders Exchange of WA, Inc. For usage Conditions Agreement see www.bxwa.com - Always Verify Scal

DRAWING: Push Button Detail

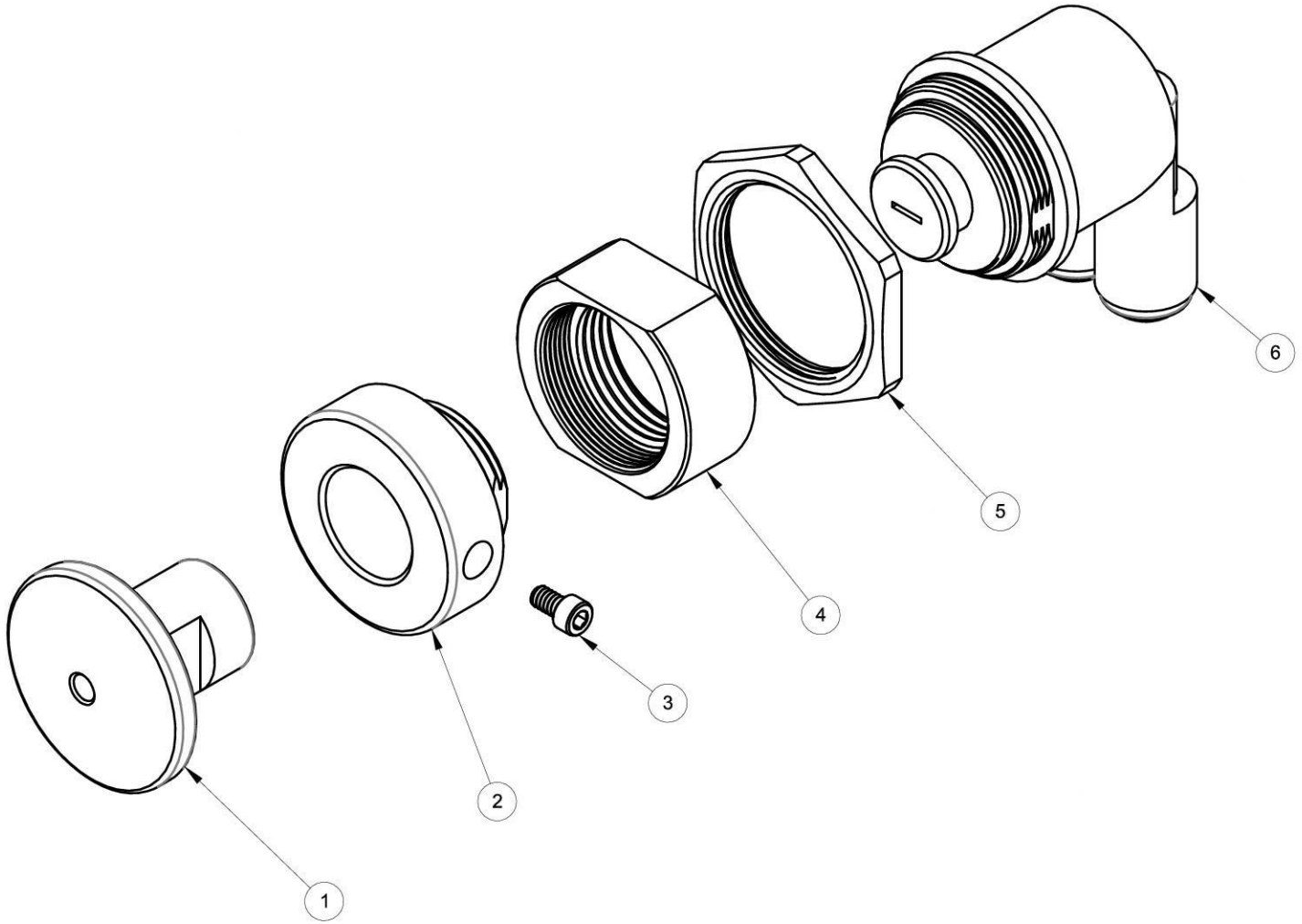

ITEM #	PART #	DESCRIPTION	QTY.
1	380110	PUSH PIN, ADJUSTABLE PUSHBUTTON VALVE	1
2	380111	SLEEVE, ADJUSTABLE PUSHBUTTON VALVE	1
3	800157	6-32 x 1/4" SH CAP SCREW	1
4	380062	SLEEVE, ADAPTER TO ELKAY PLASTIC SELF-CLOSING VALVE	1
5	600286	NUT, CARTRIDGE MOUNTING	1
6	600285	SELF-CLOSING CARTRIDGE, 1.0 GPM	1

Provided to Builders Exchange of WA, Inc. For usage Conditions Agreement see www.bxwa.com - Always Verify Scal

APPENDIX E
SUNSHADE CANOPY SYSTEM DETAILS

Provided to Builders Exchange of WA, Inc. For usage Conditions Agreement see www.bxwa.com - Always Verify Scal

2 1

B

A

LIST OF MATERIALS

ITEM	DESCRIPTION	QTY	MATERIAL / SHAPE
1	COLUMN	8	HSS - 6.625x0.280
2	BASE PLATE	8	STEEL PLATE - 1"
3	FABRIC TAB	15	STEEL PLATE - 3/8"
4	COLUMN CAP	8	STEEL PLATE - 1/4"
5	HDPE FABRIC	5	HDPE MESH (SEE NOTES)
6	1/4" - 7X19 WIRE ROPE	5	GALV. (SEE NOTES)
7	1/4" CABLE CLAMP	15	GALV.
8	1/2" TURN BUCKLE	15	GALV.
9	1/2" D-SHACKLE	45	GALV.
10	3/8" - DEE RING THIMBLE	15	SS 3/8" SOLOMESH DEE RING THIMBLE - PART NO. 207032

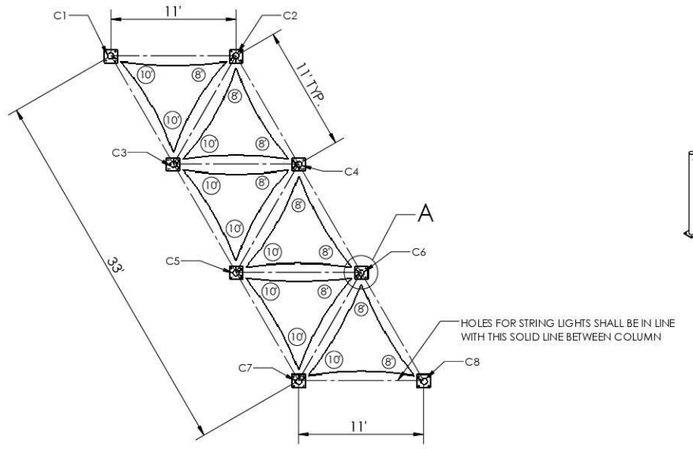

TOP - PLAN VIEW

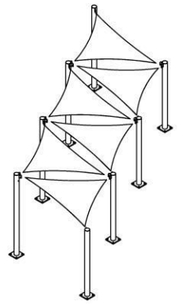

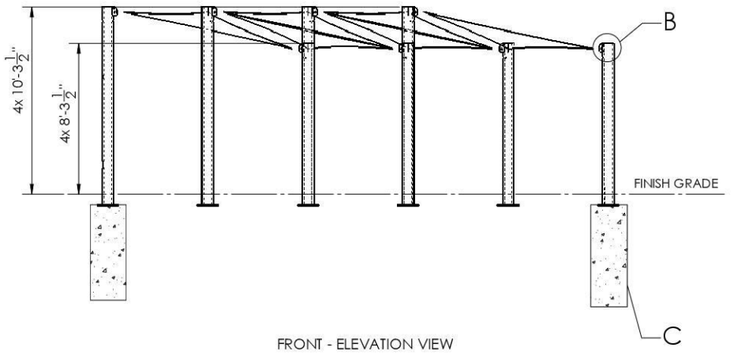

FRONT - ELEVATION VIEW

- **GENERAL NOTES:**

- CODES AND SPECIFICATIOINS
  - 2021 INTERNATIONAL BUILDING CODE
  - ASCE 7-16 MINIMUM DESIGN LOADS FOR BUILDINGS AND OTHER STRUCTURES
  - AISC 360-16 CODE OF STANDARD PRACTICE FOR STEEL BUILDINGS AND BRIDGES

- **MATERIALS:**

- STRUCTURAL SHAPED TUBING - ASTM A-500 GR. B (SQ. RECT. = FY 46 KSI) (ROUND = FY 42 KSI)
  - PLATES - ASTM A-36
  - IF APPLICABLE, CONCRETE REINFORCING STEEL FOR FOUNDATIONS - ASTM A-615 GR. 60
  - IF APPLICABLE, CAST-IN-PLACE ANCHOR RODS - ASTM F1554 G36
  - IF APPLICABLE, FIELD BOLTS - ASTM A-325, BOLTS SHOWN SHALL BE TIGHTENED WITH THE TURN OF THE NUT METHOD
  - IF APPLICABLE, WIRE ROPE - ASTM A475 OR A363

- **WELDING:**

- WELDING SHALL BE PERFORMED BY AWS D1.1 STRUCTURAL CERTIFIED WELDERS.
  - IF APPLICABLE, WELDING SHALL BE PERFORMED BY LADBS APPROVED TYPE 1 FABRICATORS
  - NO FIELD WELDING ALLOWED

- **CORROSION PROTECTION:**

- HSS ASSEMBLIES (BASE PLATES, CAP PLATES & CONNX. PLATES) SHALL HAVE CONTAMINANTS REMOVED, AND COATED WITH ZINC-RICH PRIMER PRIOR TO POWDER CTG.
  - POWDER COAT TO BE TGIC POLYESTER POWDER APPLIED TO 3.0MILS MIN. THICKNESS.

- **FABRIC:**

- FABRIC IS ASTM E84-19B-CLASS A, COMMERICAL NINETYFIVE 340,
- SEE MANUFACTURER'S WEB PAGE FOR TECHNICAL DATA

- **EXISTING CONDITIONS:**

- CANOPIES SHALL BE AT LEAST 6" AWAY FROM ANY OTHER STRUCTURE WHICH MAY BE DAMAGED DUE TO DEFLECTION
  - FIELD VERIFY EXISTING DIMENSIONS AND ELEVATIONS WHICH AFFECT FABRICATION PRIOR TO SUBMITTAL OF SHOP DRAWINGS AND FABRICATION.

- ***NO SPECIAL INSPECTIONS REQUIRED.***

DESIGN CRITERIA & LOADS:

1. RISK CATEGORY: II
2. ROOF LOAD: ROOF LIVE LOAD, MINIMUM: 5 PSF
3. SNOW LOAD: GROUND SNOW LOAD: PG = 48 PSF
4. WIND LOAD: BASIC WIND SPEED (ULTIMATE 3-SECOND GUST): 98 MPH
5.

6. WIND:

- WIND EXPOSURE: C
- KZ = 0.85
- KZT = 1.0
- KD = 0.85
- G = 0.85

7. **SEISMIC:**

- SOIL SITE CLASS = D
- SFRS = ORDINARY CANTILEVER COLUMN
- R = 1.25
- IMPORTANCE FACTOR = 1.0
- RHO = 1.3
- SS = 0.403
- S1 = 0.208
- SDS = 0.397
- SD1 = 1.097

8. FOUNDATIONS:

- CONCRETE SHALL HAVE A SPECIFIED MIN. COMPRESSIVE STRENGTH OF 2,500 PSI AT 28 DAYS
- COARSE AGGREGATE 1", MAX
- SLUMP 4.0 +/-1"
- W/C RATIO = 0.54, MAX
- IF APPLICABLE, BASEPLATES AND ANCHOR BOLTS INSTALLED BELOW GRADE, SHALL BE ENCASED 3" CLR. COVER W/ THE SAME CONCRETE MIX AS FOUNDATIONS

9. SOIL CAPACITY:

- SOIL CLASS: 5
- ALLOWABLE END BEARING = 1500 PSF
- ALLOWABLE PASSIVE BEARING = 100 X 2 = 200 PSF/FT (FOR CANTILEVER STRUCTURE NOT SENSITIVE TO 1/2" DEFLECTION)
- NO CURRENT GEOTECHNICAL REPORT

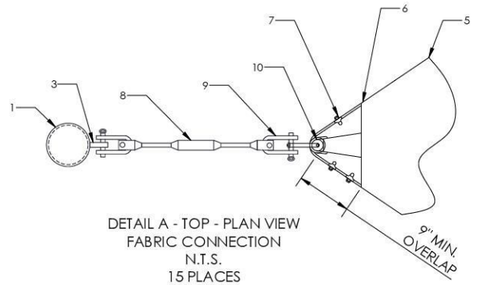

DETAIL A - TOP - PLAN VIEW
FABRIC CONNECTION
N.T.S.
15 PLACES

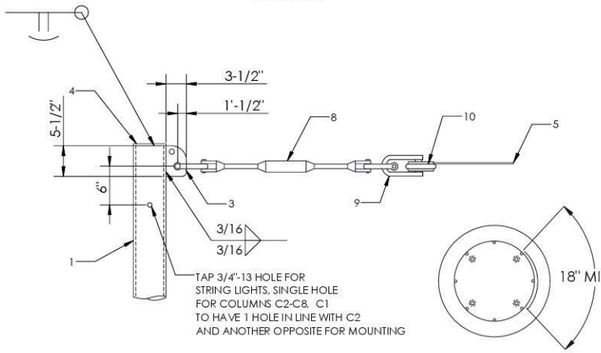

DETAIL B - FRONT - ELEVATION VIEW
FABRIC CONNECTION
N.T.S.
15 PLACES

DETAIL C - TOP VIEW
FOOTING
15 PLACES
N.T.S

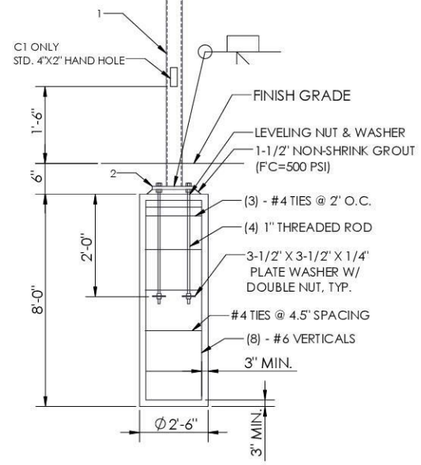

DETAIL C - SIDE SECTION VIEW
FOOTING
8 PLACES
N.T.S

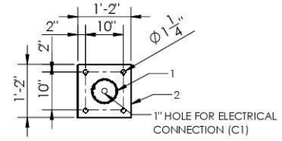

DETAIL C - TOP - PLAN VIEW
BASE PLATE
SCALE 1 : 20
8 PLACES

SEAL

ENGINEER & MANUFACTURER

CUSTOM CANOPIES INC.

140 N. GILBERT RD.
MESA, AZ 85203

PROJECT / LOCATION

DEPOT PARK

8627 271ST ST. NW
STANWOOD, WA 98292

DRAWING NO.

OR359

MODEL

TSB - 33X11X8-10

DRAWN BY:	IB	DATE:	02/12/2026
CHECKED BY:	HD	DATE:	02/12/2026
SHEET FORMAT:	ARCH. D	REVISION:	A.1
SCALE:	1:100	SHEET 1 OF 1	

CUSTOM CANOPIES INC

Provided to Builders Exchange of WA, Inc. For usage Conditions Agreement see www.bxwa.com - Always Verify Scal

APPENDIX F
SITE CLEANUP REPORTS

Provided to Builders Exchange of WA, Inc. For usage Conditions Agreement see www.bxwa.com - Always Verify Scal

CLEANUP ACTION COMPLETION REPORT

SEBRANKE PROPERTY
STANWOOD, WASHINGTON

FACILITY SITE ID: 74354
CLEANUP SITE ID: 15464

Prepared for
CITY OF STANWOOD
STANWOOD, WASHINGTON
June 20, 2023
Project No. M1030.02.006

MAUL FOSTER ALONGI

Prepared by
Maul Foster & Alongi, Inc.
1329 N State Street, Suite 301, Bellingham, WA 98225

Provided to Builders Exchange of WA, Inc. For usage Conditions Agreement see www.bxwa.com - Always Verify Scal

CLEANUP ACTION
COMPLETION REPORT

SEBRANKE PROPERTY
STANWOOD, WASHINGTON

FACILITY SITE ID: 74354
CLEANUP SITE ID: 15464

The material and data in this report were prepared under the supervision and direction of the undersigned.

MAUL FOSTER & ALONGI, INC.

Evelyn Lundeen, EIT
Staff Engineer

06-20-2023
Steven Taylor, PE
Principal Engineer

Carolyn Wise, LHG
Project Hydrogeologist

Provided to Builders Exchange of WA, Inc. For usage Conditions Agreement see www.bxwa.com - Always Verify Scal

CONTENTS

TABLES AND ILLUSTRATIONS V

ACRONYMS AND ABBREVIATIONS VI

1 INTRODUCTION 1
1.1 PROJECT OBJECTIVES 1

2 BACKGROUND 2
2.1 PROPERTY DESCRIPTION 2
2.2 PROPERTY HISTORY AND CURRENT USE 2
2.3 SITE CONDITIONS 2

3 PROJECT TEAM AND ORGANIZATION 3
3.1 PROJECT TEAM 3
3.2 PROJECT SCHEDULE 4
3.3 CONSTRUCTION OVERSIGHT 4

4 SITE PREPARATION 4
4.1 MOBILIZATION AND MONITORING WELL DECOMMISSIONING 4
4.2 EROSION AND SEDIMENT CONTROLS 5

5 SOIL EXCAVATION AND MANAGEMENT 5
5.1 SOIL EXCAVATION 5
5.2 CONFIRMATION SAMPLING 6
5.3 UNDERGROUND STORAGE TANK DECOMMISSIONING 7
5.4 SOIL DISPOSAL 8
5.5 BIOREMEDIATION AND CHEMICAL OXIDATION 8
5.6 BACKFILL 8
5.7 DEMOBILIZATION 9

6 SITE INSPECTION 9

7 CERTIFICATION STATEMENT 9

8 POST-REMEDY NEXT STEPS AND MONITORING 9
8.1 SOIL 9
8.2 GROUNDWATER 9

LIMITATIONS

REFERENCES

TABLES

FIGURES

APPENDIX A
SITE PHOTOGRAPHS

APPENDIX B
DECOMMISSIONED WELL LOGS

APPENDIX C
ANALYTICAL LABORATORY REPORTS

Provided to Builders Exchange of WA, Inc. For usage Conditions Agreement see www.bxwa.com - Always Verify Scal

CONTENTS (CONTINUED)

APPENDIX D
DATA VALIDATION MEMORANDUM

APPENDIX E
UST CLOSURE DOCUMENTATION

APPENDIX F
EXPORT DOCUMENTATION

APPENDIX G
PRODUCT DOCUMENTATION

APPENDIX H
BACKFILL DOCUMENTATION

APPENDIX I
COMPLIANCE MONITORING PLAN

Provided to Builders Exchange of WA, Inc. For usage Conditions Agreement see www.bxwa.com - Always Verify Scal

TABLES AND ILLUSTRATIONS

FOLLOWING REPORT:

TABLES

2-1 PROPOSED CLEANUP LEVELS

5-1 CONFIRMATION SAMPLE ANALYTICAL RESULTS

FIGURES

1-1 PROPERTY LOCATION

2-1 PROPERTY FEATURES

5-1 SAMPLE LOCATIONS AND EXCAVATION EXTENT

Provided to Builders Exchange of WA, Inc. For usage Conditions Agreement see www.bxwa.com - Always Verify Scal

ACRONYMS AND ABBREVIATIONS

bgs	below ground surface
the City	City of Stanwood
COC	chemical of concern
cPAH	carcinogenic polycyclic aromatic hydrocarbon
CUL	cleanup level
Ecology	Washington State Department of Ecology
heavy oils	diesel- and lube-oil-range organics
MFA	Maul Foster & Alongi, Inc.
MTCA	Model Toxics Control Act
the Property	8627 271st Street NW in Stanwood, Washington
TEQ	toxic equivalent quotient
UST	underground storage tank
WAC	Washington Administrative Code
Wyser	Wyser Construction

Provided to Builders Exchange of WA, Inc. For usage Conditions Agreement see www.bxwa.com - Always Verify Scal

1 INTRODUCTION

On behalf of the City of Stanwood (the City), Maul Foster & Alongi, Inc. (MFA), has prepared this completion report describing the cleanup actions completed at the Sebranke property located at 8627 271st Street NW in Stanwood, Washington (the Property) (see Figure 1-1). The Property is listed with the Washington State Department of Ecology (Ecology) under facility site ID 74354 and cleanup site ID 15464.

The Property is currently enrolled in Ecology's voluntary cleanup program (NW 3322). The City received funding to support cleanup actions at the Property through the brownfields revolving loan fund administered by the Washington State Department of Commerce with federal funds from the U.S. Environmental Protection Agency. Current redevelopment plans for the Property include a public park. The cleanup action was designed to mitigate direct-contact exposure risk for visitors to the future park.

1.1 Project Objectives

The cleanup action, described in the *Engineering Design Report, Sebranke Property, Stanwood, Washington* (MFA 2022), consists of removal of soil exceeding Model Toxics Control Act (MTCA) Method A cleanup levels (CULs) for unrestricted land use and placement of a bioremediation product in the base of the excavation to reduce remaining concentrations in groundwater. The cleanup action was designed to address the following objectives:

- Prevention or minimization of direct contact with, inhalation of, or ingestion of contaminated soil by human receptors (future tenants and customers)
- Prevention or minimization of direct contact with or ingestion of contaminated groundwater by human receptors

Wyser Construction (Wyser) performed the cleanup action tasks from December 5, 2022, to January 3, 2023, with oversight from MFA. The cleanup action is complete and was performed consistent with the procedures described in the engineering design report (MFA 2022). Any deviations from the original design are described in this completion report. This completion report fulfills the requirements of Washington Administrative Code (WAC) 173-340-400(6).

Provided to Builders Exchange of WA, Inc. For usage Conditions Agreement see www.bxwa.com - Always Verify Scal

2 BACKGROUND

2.1 Property Description

The approximately 0.11-acre Property is located in section 19, township 32 north, range 4 east of the Willamette Meridian, on Snohomish County tax lots 00432400101500 and 00432400101400 (see Figure 2-1). The Property is zoned "Mainstreet Business with a Transit Overlay" and is currently an undeveloped vacant lot with a grassy surface.

2.2 Property History and Current Use

According to a Phase I environmental site assessment, the Property was vacant in 1918 (MFA 2021b). A Sanborn Fire Insurance Map from 1953 shows an auto repair building, an auto parts building, a filling station, and an auto grease and oil storage area on and/or immediately adjacent to the Property (see Figure 2-1). The footprints of the former auto repair and auto parts buildings are along the eastern boundary of the Property on tax lot 00432400101500. The footprint of the former filling station and auto grease and oil storage area is located in the adjacent right-of-way overlain by a recently constructed ADA-compliant sidewalk, which likely used fill typical of such construction. It is unknown how long the auto repair and fueling facility operated at the Property. City directories indicate that an antique business (Remember When Antique) operated on the Property in 1982. By 1987, a hair salon (Eastside Hair Company) operated at the Property. The hair salon building burned down in the early 1990s, and the Property has remained vacant since.

2.3 Site Conditions

2.3.1 Geology and Hydrogeology

The Property and surrounding area are underlain by younger alluvial and estuarine deposits (Minard 1985). The lithology observed in the borings on the Property is consistent with the description of floodplain deposits and consists of fine-grained sediments (i.e., fine to very fine sand, silt, and clay) with some organic matter. Soil observed in borings during environmental investigations generally consisted of an approximately 1- to 1.5-foot-thick layer of grayish tan silty sand with gravel (likely fill material). Underlying this unit, clay was encountered to the maximum depth explored, 20 feet below ground surface (bgs). Woody debris and rootlets were observed intermittently at each boring deeper than 1.5 feet bgs.

In general, the Property is relatively flat and level. The area to the west is similarly level, but there is a significant rise in elevation to the east. Groundwater at the Property during the 2021 supplemental investigation was encountered between 3.55 and 6.61 feet bgs, consistent with previous observations made during the limited Phase II environmental site assessment. The groundwater at the Property flows southwest toward the Stillaguamish River approximately 0.4 miles from the Property (see Figure 1-1).

Provided to Builders Exchange of WA, Inc. For usage Conditions Agreement see www.bxwa.com - Always Verify Scal

2.3.2 Environmental Conditions

Several environmental investigations completed at the Property identified chemicals of concern (COCs) in soil and/or groundwater (MFA 2016, 2021a, 2021b). These investigations identified concentrations of the following contaminants that were above MTCA Method A CULs for unrestricted land use in shallow soil (less than 2 feet bgs):

- Metals (arsenic, lead, and cadmium)
- Carcinogenic polycyclic aromatic hydrocarbons (cPAHs)
- Diesel- and lube-oil-range organics (heavy oils)

It was determined that groundwater samples collected from temporary and permanent monitoring wells on the central and southeastern portions of the Property had concentrations of heavy oils above the MTCA Method A CUL (MFA 2022). Analytical results for soil and groundwater samples collected on the Property during previous investigations are summarized in the engineering design report (MFA 2022).

Based on documented historical uses and data obtained during previous investigations, it appears that the following historical operations and uses at the Property and/or at adjoining properties may have contributed to contamination at the Property:

- Former auto repair building (on Property)
- Off-Property migration of contamination onto the Property from a former filling station

Proposed CULs for the Property are summarized in Table 2-1. Cleanup standards for the Property were developed based on the conceptual site model presented in the supplemental investigation and cleanup options report (MFA 2021a).

The locations of historical samples were used to inform the anticipated excavation extent associated with the Property (MFA 2022). However, confirmation soil samples were collected from the base and sidewalls of the excavation during excavation activities, as described in Section 5.

3 PROJECT TEAM AND ORGANIZATION

3.1 Project Team

The construction project team consisted of the following members:

- Owner—the City. Alan Lytton was the City's project manager.
- Engineer and Construction Oversight—MFA. Responsible for project design and the project's overall conformance to the approved design. Carolyn Wise, LHG, was MFA's

Provided to Builders Exchange of WA, Inc. For usage Conditions Agreement see www.bxwa.com - Always Verify Scal

project manager, and Phil Wiescher, PhD, was MFA's principal in charge. Evelyn Lundeen, EIT, was MFA's field engineer.

- General Contractor—Wyser. Responsible for construction project management and site construction. Andrew Hinton was construction project manager, and Dan Reynolds was construction superintendent.
- Surveying—Wyser. Responsible for generative as-built markups for the excavation.

3.2 Project Schedule

The project went out for bid on September 27, 2022, with the final award notification going to Wyser on October 12, 2022. Wyser mobilized construction equipment to the site the week of December 5, 2022, and immediately began the cleanup work.

3.3 Construction Oversight

3.3.1 Construction Submittals

Technical submittals were submitted by the contractor (Wyser) before and during construction, consistent with the project specifications. Submittals were received and reviewed by the engineer (MFA).

3.3.2 Field Notes and Photographs

Daily remedial activities were documented in photos and field notes kept on file by MFA. Key photographs are provided in Appendix A.

4 SITE PREPARATION

4.1 Mobilization and Monitoring Well Decommissioning

Before construction began, temporary construction fencing was installed along the Property's boundary. Before the start of excavation activities, public and private utility locates were completed to identify buried utilities, if any, in the work area.

Monitoring wells MW-3 and MW-1 were decommissioned before construction. Well decommissioning activities were performed consistent with Washington State well decommissioning standards (WAC Chapter 173-160) (see Figure 2-1). Decommissioned well logs are provided in Appendix B.

Provided to Builders Exchange of WA, Inc. For usage Conditions Agreement see www.bxwa.com - Always Verify Scal

4.2 Erosion and Sediment Controls

The topography of the Property is flat, with no clear drainage pathways to any surface water discharge points. At the start of construction, the need for erosion and sediment best management practices was assessed by the engineer and the general contractor. Excavated material was loaded directly into trucks, eliminating the need for covering stockpiled materials overnight or installing silt fencing. Site conditions were monitored during the construction process to ensure that implementation of additional best management practices was not necessary.

5 SOIL EXCAVATION AND MANAGEMENT

5.1 Soil Excavation

5.1.1 Shallow Soil Excavation

Shallow soil excavation activities began on December 6, 2022. Impacted surface soils were excavated to the planned depth of 2 feet, as shown on Figure 2-1. Excavation activities began in the southeastern corner of the Property at previous boring locations where exceedances had been identified and continued northward toward the anticipated excavation and property parcel boundaries. To guide excavation activities, soil was regularly screened with a field-portable X-ray fluorescence device and a photoionization detector at approximately 10-foot intervals along every new sidewall length and at every 400 square feet of base exposed. If field screening indicated that a soil sample had COC concentrations below MTCA Method A CULs, a sample was collected and sent to a laboratory for confirmation analysis.

If field screening and/or laboratory confirmation samples indicated that soils with COC concentrations above MTCA Method A CULs were still present at the excavation limits, additional soil outside the initial horizontal extents was removed at the direction of the engineer, as described in Section 5.2. The maximum excavated depth of the shallow soil excavation was 2 feet bgs, and the lateral extent of excavation was constrained by the property tax parcel boundaries.

During excavation activities, fill material with debris was encountered in the shallow soil excavation. The debris included bricks, burnt wood, and large chunks of concrete, which were removed to the extent feasible within the project timeframe and budget and the Property's tax parcel boundaries. The fill material extent went beyond the eastern tax parcel boundaries of the Property. Any debris or impacts beyond the eastern parcel boundary of the Property were left in place.

5.1.2 Deep Soil Excavation

Deep soil excavation activities began on December 6, 2022. Excavation in the deep excavation area began at the location of decommissioned monitoring well MW-3 and expanded radially outward.

Provided to Builders Exchange of WA, Inc. For usage Conditions Agreement see www.bxwa.com - Always Verify Scal

During excavation, an underground storage tank (UST) was discovered approximately 4 feet bgs, as described in Section 5.3. Excavated soil was temporarily stockpiled on site prior to off-site disposal, as described in Section 5.4.

Thick units of organics (leaves and roots) were observed in the deep soil excavation area around 6 feet bgs. Soil consisted of gray clay with interbedded fine-to-medium-grained sands.

5.1.2.1 Dewatering

Groundwater was encountered at approximately 4 feet bgs in the deep soil excavation. Groundwater accumulation in the excavation was pumped off by a vac truck operated by MarVac for off-site disposal, as described in Section 5.3.

5.2 Confirmation Sampling

During excavation activities, confirmation soil samples were collected in accordance with the approved sampling and analysis plan included as an appendix to the engineering design report (MFA 2022). Sidewall samples were collected every 20 linear feet from a midpoint depth of 1 foot bgs in the shallow excavation area and 6 feet bgs in the deep excavation area to represent remaining site conditions. Base samples were collected at approximately 2 feet bgs across the shallow soil excavation area.

Analytical results from confirmation samples are provided in Table 5-1. Analytical laboratory reports are provided in Appendix C. Analytical data and the laboratory's internal quality assurance and quality control data were reviewed to assess whether they met project-specific data quality objectives. This review was performed consistent with EPA procedures for evaluating laboratory analytical data (EPA, 2020a,b) and appropriate laboratory and method-specific guidelines (FBI, 2019). A data validation memorandum summarizing data evaluation procedures, data usability, and deviations from specific field and/or laboratory methods is included as Appendix D. The data are considered acceptable for their intended use, with the appropriate data qualifiers assigned.

During shallow soil excavation activities, soil from north and west sidewall locations (NSW01, WSW02, and WSW03) exceeded CULs for lead, benzo(a)pyrene, and/or cPAH toxic equivalent quotient (TEQ) and were overexcavated to the extent feasible, as described in Section 5.1. Final sidewall samples were collected from the north and west sidewalls (NSW02 and WSW04, respectively).

Of the final leave condition samples in the shallow soil excavation, four samples, including three base and one sidewall (BASE01-S-1.0, BASE04-S-2.0, BASE05-S-2.0, and ESW02-S-1.0), exceeded MTCA Method A CULs for the Property. Soil concentrations in eastern sidewall sample ESW02-S-1.0 exceeded MTCA Method A CULs for lead, benzo(a)pyrene, and cPAH TEQ. Overexcavation along the eastern sidewall was determined to be infeasible because of the presence of underground utilities, an adjacent power line, and the property line. The other eastern sidewall sample, ESW01-S-1.0, did not have concentrations above MTCA Method A CULs for any contaminants of concern.

Confirmation sampling associated with the deep excavation was conducted during the UST site assessment, as described in Section 5.3.

Provided to Builders Exchange of WA, Inc. For usage Conditions Agreement see www.bxwa.com - Always Verify Scal

Wyser generated as-built drawings by measuring the excavation extent from known features such as storm drains and building corners. MFA used a Trimble Geo7x handheld global positioning system unit to document the excavation boundary and the confirmation sample locations. The locations of leave surface confirmation samples are shown on Figure 5-1.

5.2.1 Geotextile Fabric

Based on the results of the confirmation sampling, elevated concentrations of cPAHs and/or metals were left in place at the base of the shallow soil excavation at the maximum depth excavated, 2 feet bgs. Orange construction fencing was placed as demarcation along the entire base of the shallow excavation extent. This demarcation layer acts as a visual barrier for people potentially conducting future soil-disturbing activities, informing them that additional considerations concerning handling and disposal of disturbed underlying soil may be required.

5.3 Underground Storage Tank Decommissioning

MFA conducted a site assessment in support of the permanent closure and in-place decommissioning of an approximately 850-gallon UST discovered during deep excavation activities at the Property, as mentioned in Section 5.1.2. The former UST location is shown in Figure 5-1. Photographs of the UST removal, soil excavation, and groundwater treatment activities are included in Appendix A. The UST was oriented west-east and was partially covered by a high-voltage utility pole. Because of the UST's proximity to, and its underlying position relative to, the utility pole, and based on the unstable soils in the vicinity of the UST, it was determined, in coordination with Ecology, that in-place closure was appropriate.

The site assessment was performed by Carolyn Wise of MFA, a licensed hydrogeologist (Washington License No. 19110670), consistent with the UST regulations put forth in WAC 173-360 and Ecology *Site Assessment Guidance for Underground Storage Tank Systems* (Ecology 2021). Wyser decommissioned the UST in place due to concerns about maintaining the structural integrity of a large, high-voltage power line adjacent to the tank. A UST Closure and Site Assessment form, a Site Assessment Checklist, and other related UST-decommissioning documentation are included as Appendix E.

The 850-gallon UST was decommissioned in place on December 8, 2022. The UST was not in use and was submerged and filled with groundwater upon discovery. No information regarding the UST's tank number, date of installation, or historical use was documented or known.

Sound Testing of Seattle, Washington, rendered the UST inert with carbon dioxide, after which Sound Testing considered it safe for in-place closure with controlled-density fill. Marvac emptied the UST of groundwater and triple-rinsed it. Approximately 1,300 gallons of groundwater and rinsing fluids were removed from the UST and the surrounding excavation, contained in a vac truck, and transported to Marvac's facility for processing.

The UST was a single-walled, coated steel tank, 4 feet in diameter and 9 feet in length, with no secondary containment structures. Only a portion of the tank could be exposed without undermining the utility pole. No holes or pitting were observed; however, the fill port line had been removed and

Provided to Builders Exchange of WA, Inc. For usage Conditions Agreement see www.bxwa.com - Always Verify Scal

groundwater likely entered the UST from the exposed fill port opening. No piping or associated structures were observed around the UST.

It appears that native soil was used as backfill when the UST was installed, as there was no discernible soil-backfill interface. Groundwater was encountered in the excavation during the discovery of the UST. Therefore, soil samples were collected at the soil-groundwater interface at approximately 6 feet bgs along the north, west, and south sidewalls (TSN, TSW, TSS, respectively [see Table 5-1]) of the UST excavation. Heavy oils and benzene were identified above the MTCA Method A CUL along the south sidewall of the UST excavation adjacent to the property boundary. Due to the proximity of the sample to the utility pole, additional excavation was determined to be technically infeasible. A soil sample collected near the UST (01-SS-6.0) was removed as part of the UST overexcavation once the UST was discovered.

5.4 Soil Disposal

Wyser maintained contaminated soil stockpiles on site during construction activities.

Stockpiled soil was loaded into trucks and disposed of at the Waste Management facility in Seattle, Washington. An additional 6 inches of gravel/surface soil was removed from the footprint of the contaminated material stockpile as a precaution against potentially contaminated material that could have been introduced by stockpiling. Trucks were tarped during transport to prevent release. A total of approximately 286 tons of material was disposed of at the landfill. Trucking tickets are included in Appendix F.

5.5 Bioremediation and Chemical Oxidation

To support degradation of remaining hydrocarbon concentrations in groundwater, approximately 80 pounds of Regenesis ORC Advanced and 480 pounds of Regenesis RegenOx (Appendix G) were placed in the deep soil excavation. Before the placement of backfill material, Wyser placed half of the bioremediation product evenly in the base of the deep soil excavation. Using an excavator, Wyser tilled the soils at the base of the excavation to mix in the products in the smear zone approximately 1 to 2 feet below the base of the excavation. The remaining ORC was mixed into a 1-foot lift of the backfill material and placed in the base of the deep soil excavation.

5.6 Backfill

Clean backfill was placed in 1-foot lifts and compacted with the excavator bucket. Approximately 404 tons of gravel borrow were imported from Lenz Enterprises of Stanwood, Washington. Prior to import, fill material was analyzed for site contaminants (Appendix H). The excavation was backfilled to original grade. Additional gravel fill was placed across the site to restore disturbed areas, including the contaminated soil stockpile footprint and any areas with erosion from equipment or truck traffic. Import tickets are included in Appendix H.

Provided to Builders Exchange of WA, Inc. For usage Conditions Agreement see www.bxwa.com - Always Verify Scal

5.7 Demobilization

Following backfill activities, Wyser removed all temporary infrastructure and demobilized from the site.

6 SITE INSPECTION

MFA conducted a final inspection of the excavation work on January 17, 2023. No unresolved issues or work items were identified at that time.

7 CERTIFICATION STATEMENT

The construction oversight services described in this report were performed by MFA on behalf of the City of Stanwood. Based on the observations made during remedial excavation and the testing results, it is the opinion of the engineer that the cleanup actions completed at the Sebranke property were performed in substantial compliance with the plans, specifications, and related documents.

8 POST-REMEDY NEXT STEPS AND MONITORING

8.1 Soil

Localized areas of subsurface soil with concentrations of metals and/or cPAHs were left in place at depths greater than two feet bgs. A clean soil cover of at least two feet was installed across excavated areas of the Property as shown on Figure 5-1. This clean soil cover prevents direct contact exposure of future park visitors with the underlying soil on the Property. In addition to the soil cover, a demarcation layer has been placed across the entire excavation area where soil was removed to two feet bgs. This demarcation acts as a visual barrier to discourage disturbance of underlying soil, for example by construction workers. A site management plan or similar will be developed in coordination with City to outline procedures for interacting with soil underlying the demarcation layer if disturbance or maintenance activities are planned.

8.2 Groundwater

With the completion of this cleanup action, a compliance monitoring plan was prepared to ensure compliance with CULs in groundwater on the Property (see Appendix I). The compliance monitoring plan includes proposed monitoring well locations and a description of proposed monitoring activities.

Provided to Builders Exchange of WA, Inc. For usage Conditions Agreement see www.bxwa.com - Always Verify Scal

Following installation of the replacement monitoring wells, groundwater compliance monitoring will be conducted starting in summer 2023, at least six months after completion of remediation activities.

Groundwater compliance monitoring will be conducted for the following purposes:

- To assess the ongoing effectiveness and performance of the Property groundwater quality after completion of the cleanup action.
- To monitor the degradation of the COCs in meeting CULs at all points of compliance. This will include monitoring of COCs in monitoring network wells at the Property. The Property's hydrogeologic regime will also be evaluated through assessment of the groundwater flow conditions.
- To evaluate conditions for termination of groundwater monitoring activities.

At least six months after completion of construction activities and application of the bioremediation product, monitoring wells MW-1 and MW-3 will be reinstalled. Well installation activities will be performed consistent with Washington State well decommissioning standards (WAC Chapter 173-160).

A groundwater monitoring report will be prepared following monitoring well installation and completion of the first sampling event. Monitoring wells will be sampled for groundwater COCs to assess remedy-effectiveness, as described in the attached compliance monitoring plan (see Appendix I).

Provided to Builders Exchange of WA, Inc. For usage Conditions Agreement see www.bxwa.com - Always Verify Scal

LIMITATIONS

The services undertaken in completing this report were performed consistent with generally accepted professional consulting principles and practices. No other warranty, express or implied, is made. These services were performed consistent with our agreement with our client. This report is solely for the use and information of our client unless otherwise noted. Any reliance on this report by a third party is at such party's sole risk.

Opinions and recommendations contained in this report apply to conditions existing when services were performed and are intended only for the client, purposes, locations, time frames, and project parameters indicated. We are not responsible for the impacts of any changes in environmental standards, practices, or regulations subsequent to performance of services. We do not warrant the accuracy of information supplied by others, or the use of segregated portions of this report.

Provided to Builders Exchange of WA, Inc. For usage Conditions Agreement see www.bxwa.com - Always Verify Scal

REFERENCES

Ecology. 2021. *Site Assessment Guidance for Underground Storage Tank Systems.* Publication 21-09-050. Revised October 2022. Washington State Department of Ecology, Toxics Cleanup Program. Olympia, Washington. January.

EPA. 2020a. *National Functional Guidelines for Inorganic Superfund Methods Data Review.* EPA 542-R-20-006. U.S. Environmental Protection Agency, Office of Superfund Remediation and Technology Innovation: Washington, DC. November.

EPA. 2020b. *National Functional Guidelines for Organic Superfund Methods Data Review.* EPA 540-R-20-005. U.S. Environmental Protection Agency, Office of Superfund Remediation and Technology Innovation: Washington, DC. November.

FBI. 2019. *Quality Assurance Manual.* Rev. 17. Friedman & Bruya, Inc.: Seattle, WA. November 6.

MFA. 2016. Heather Good and Carolyn Wise, Maul Foster & Alongi, Inc. *Limited Phase II Environmental Site Assessment, Sebranke Property, Stanwood, Washington.* Letter to R. Larsen, City of Stanwood. July 26.

MFA. 2021a. *Supplemental Investigation and Cleanup Options Report, Sebranke Property, Stanwood, Washington, Grant Agreement No. OTGP-2021-STANWO-00043.* Prepared for the City of Stanwood. Maul Foster & Alongi, Inc.: Bellingham, WA. June 24.

MFA. 2021b. *Phase I Environmental Site Assessment, Sebranke Property, Stanwood, Washington.* Prepared for the City of Stanwood. Maul Foster & Alongi, Inc.: Bellingham, WA. June 28.

MFA. 2022. *Engineering Design Report, Sebranke Property, Stanwood, Washington.* Prepared for the City of Stanwood. Maul Foster & Alongi, Inc.: Bellingham, WA. September 13.

Minard, J. P. 1985. *Geologic Map of the Stanwood Quadrangle, Snohomish County, Washington.* 1:24,000 scale. Miscellaneous Field Studies, Map MW-1747. U.S. Geological Survey and Department of the Interior: Denver, CO.

Provided to Builders Exchange of WA, Inc. For usage Conditions Agreement see www.bxwa.com - Always Verify Scal

TABLES



Provided to Builders Exchange of WA, Inc. For usage Conditions Agreement see www.bxwa.com - Always Verify Scal

Table 2-1
Proposed Cleanup Levels
Sebranke Property
Stanwood, Washington

Chemical of Concern	Soil CUL (mg/kg)	Soil CUL Basis[1]	Groundwater CUL (ug/L)	Groundwater CUL Basis[1]
Arsenic	20	MTCA Method A CUL	NA	--
Cadmium	2	MTCA Method A CUL	NA	--
Lead	250	MTCA Method A CUL	NA	--
cPAH TEQ[a][2][3]	0.19	MTCA Method A CUL	NA	--
Diesel-Range Hydrocarbons	2,000	MTCA Method A CUL	500	MTCA Method A CUL
Lube-Oil-Range Hydrocarbons	2,000	MTCA Method A CUL	500	MTCA Method A CUL
Heavy Oils[b]	2,000	MTCA Method A CUL	500	MTCA Method A CUL

Notes

-- = not analyzed.

cPAH TEQ = carcinogenic polycyclic aromatic hydrocarbons toxic equivalent quotient.

CUL = cleanup level.

mg/kg = milligrams per kilogram.

MTCA = Model Toxics Control Act.

NA = not applicable.

ug/L = micrograms per liter.

[a]cPAH TEQ values are based on toxic equivalence factors.

[b]Heavy oils is the sum of diesel-range hydrocarbons and motor-oil-range hydrocarbons where non-detect results are included at one-half the detection limit; when all results are non-detect, the highest detection limit is used.

References

[1]Ecology. 2021. *Cleanup Levels and Risk Calculation (CLARC) Master Table* . Washington State Department of Ecology Toxics Cleanup Program. February.

[2]Ecology. 2015. Jeff Johnston, Washington State Department of Ecology Toxics Cleanup Program. *Evaluating the Human Health Toxicity of Carcinogenic PAHs Using Toxicity Equivalence Factors.* Memorandum to Interested Persons. April 20.

[3]Ecology. 2019. *Polycyclic Aromatic Hydrocarbons and Benzo[a]pyrene: Changes to MTCA Default Cleanup Levels for 2017.* Washington State Department of Ecology Toxics Cleanup Program. May.

Provided to Builders Exchange of WA, Inc. For usage Conditions Agreement see www.bxwa.com - Always Verify Scal

MAUL FOSTER ALONGI

Table 5-1
Confirmation Sample Analytical Results
Sebranke Property
Stanwood, Washington

Excavation Area:	Proposed Cleanup Levels[1]	Washington State Background Metals, Puget Sound[2]	Shallow Excavation									
Location:			BASE01	BASE02	BASE03	BASE04	BASE05	ESW01	ESW02		NSW01	NSW02
Sample Name:			BASE01-SS-1.0	BASE02-SS-2.0	BASE03-SS-2.0	BASE04-SS-2.0	BASE05-SS-2.0	ESW01-SS-1.0	ESW02-SS-1.0	DUP-SS-1.0	NSW01-SS-1.0	NSW02-SS-1.0
Sample Date:			12/06/2022	12/08/2022	12/08/2022	12/08/2022	01/03/2023	12/06/2022	12/08/2022	12/08/2022	12/08/2022	12/13/2022
Sample Depth (ft bgs):			1.0	2.0	2.0	2.0	2.0	1.0	1.0	1.0	1.0	1.0
Sample Type:			Confirmation	Confirmation	Confirmation	Confirmation	Confirmation	Confirmation	Confirmation	Confirmation	Removed	Confirmation
HCID (detect/non-detect)												
Diesel	NV	NA	--	--	--	--	--	--	--	--	--	--
Gasoline	NV	NA	--	--	--	--	--	--	--	--	--	--
Heavy oil	NV	NA	--	--	--	--	--	--	--	--	--	--
TPH (mg/kg)												
Diesel-range hydrocarbons	2,000	NA	50 U	50 U	50 U	1,100	--	50 U	78	86	540	100 U
Motor-oil-range hydrocarbons	2,000	NA	250 U	250 U	250 U	4,400	--	250 U	420	460	2,100	250 U
Diesel+Oil[a]	2,000[b]	NA	250 U	250 U	250 U	5,500		250 U	500	550	2,600	250 U
Total Metals (mg/kg)												
Arsenic	20	7	4.57	5.69	4.05	4.96	5.40	3.77	11.2	11.0	8.51	2.17
Cadmium	2	1	1.04	1 U	1 U	1 U	1 U	1 U	2.33	1.94	2.44	1 U
Lead	250	24	373	97.0	104	569	344	123 J	937 J	1,590 J	523	14.1
VOCs (mg/kg)												
Benzene	0.03	NA	--	--	--	--	--	--	--	--	--	--
Ethylbenzene	6	NA	--	--	--	--	--	--	--	--	--	--
Toluene	7	NA	--	--	--	--	--	--	--	--	--	--
Xylenes, total[c]	9	NA	--	--	--	--	--	--	--	--	--	--
PAHs (mg/kg)												
1-Methylnaphthalene	34.0[d]	NA	--	--	--	--	--	--	--	--	--	--
2-Methylnaphthalene	320[d]	NA	--	--	--	--	--	--	--	--	--	--
Benzo(a)anthracene	NV	NA	0.27	0.023	0.025	0.2 U	0.05 U	0.05 U	0.2 U	0.53	0.26	0.01 U
Benzo(a)pyrene	0.19	NA	0.55	0.035	0.056	0.24	0.05 U	0.05 U	0.33	0.67	0.40	0.01 U
Benzo(b)fluoranthene	NV	NA	0.93	0.051	0.078	0.35	0.059	0.055	0.64	1.3	0.61	0.01 U
Benzo(k)fluoranthene	NV	NA	0.29	0.014	0.018	0.2 U	0.05 U	0.05 U	0.2 U	0.36	0.19	0.01 U
Chrysene	NV	NA	0.45	0.031	0.042	0.22	0.05 U	0.05 U	0.31	0.68	0.34	0.01 U
Dibenzo(a,h)anthracene	NV	NA	0.066	0.01 U	0.01 U	0.2 U	0.05 U	0.05 U	0.2 UJ	0.099 J	0.05 U	0.01 U
Indeno(1,2,3-cd)pyrene	NV	NA	0.29	0.03	0.053	0.2 U	0.05 U	0.05 U	0.34 J	0.43 J	0.22	0.01 U
Naphthalene	5	NA	--	--	--	--	--	--	--	--	--	--
cPAH TEQ[e][3]	0.19	NA	0.74	0.048	0.074	0.32	0.041	0.041	0.46 J	0.95 J	0.53	0.01 U

Provided to Builders Exchange of WA, Inc. For usage Conditions Agreement see www.bxwa.com - Always Verify Scal

MAUL FOSTER ALONGI

Table 5-1
Confirmation Sample Analytical Results
Sebranke Property
Stanwood, Washington

Excavation Area:	Proposed Cleanup Levels[1]	Washington State Background Metals, Puget Sound[2]	Shallow Excavation (cont.)						UST Excavation			
Location:			SSW01	SSW02	WSW01	WSW02	WSW03	WSW04	01	TSN	TSS	TSW
Sample Name:			SSW01-SS-1.0	SSW02-SS-1.0	WSW01-SS-1.0	WSW02-SS-1.0	WSW03-SS-1.0	WSW04-SS-1.0	01-SS-6.0	TSN-SS-6.0	TSS-SS-6.0	TSW-SS-6.0
Sample Date:			12/06/2022	12/06/2022	12/06/2022	12/08/2022	12/13/2022	01/03/2023	12/06/2022	12/08/2022	12/08/2022	12/08/2022
Sample Depth (ft bgs):			1.0	1.0	1.0	1.0	1.0	1.0	6.0	6.0	6.0	6.0
Sample Type:			Confirmation	Confirmation	Confirmation	Removed	Removed	Confirmation	Removed	Confirmation	Confirmation	Confirmation
HCID (detect/non-detect)												
Diesel	NV	NA	--	--	--	--	--	--	--	DETECT	DETECT	ND
Gasoline	NV	NA	--	--	--	--	--	--	--	ND	ND	ND
Heavy oil	NV	NA	--	--	--	--	--	--	--	DETECT	DETECT	ND
TPH (mg/kg)												
Diesel-range hydrocarbons	2,000	NA	50 U	50 U	50 U	91	100 U	--	100 U	180 J-	1,300	100 U
Motor-oil-range hydrocarbons	2,000	NA	250 U	250 U	250 U	390	250 U	--	500 U	250 R	2,300	500 U
Diesel+Oil[a]	2,000[b]	NA	250 U	250 U	250 U	480	250 U		500 U	180 J-	3,600	500 U
Total Metals (mg/kg)												
Arsenic	20	7	3.19	3.34	3.66	5.62	2.43	1.68	--	14.7	8.59	15.7
Cadmium	2	1	1 U	1 U	1 U	1 U	1 U	1 U	--	1 U	2 U	2 U
Lead	250	24	19.1	28.5	34.9	199	363	12.3	--	47.5	10.9	24.3
VOCs (mg/kg)												
Benzene	0.03	NA	--	--	--	--	--	--	--	0.02 U	0.17	0.02 U
Ethylbenzene	6	NA	--	--	--	--	--	--	--	--	--	0.02 U
Toluene	7	NA	--	--	--	--	--	--	--	--	--	0.02 U
Xylenes, total[c]	9	NA	--	--	--	--	--	--	--	--	--	0.06 U
PAHs (mg/kg)												
1-Methylnaphthalene	34.0[d]	NA	--	--	--	--	--	--	--	--	0.16	0.02 U
2-Methylnaphthalene	320[d]	NA	--	--	--	--	--	--	--	--	0.22	0.02 U
Benzo(a)anthracene	NV	NA	0.05 U	0.05 U	0.05 U	0.079	0.01 U	0.05 U	--	0.10	0.02 U	0.041
Benzo(a)pyrene	0.19	NA	0.05 U	0.05 U	0.05 U	0.19	0.01 U	0.05 U	--	0.12	0.02 U	0.058
Benzo(b)fluoranthene	NV	NA	0.05 U	0.05 U	0.058	0.25	0.01 U	0.05 U	--	0.17	0.02 U	0.091
Benzo(k)fluoranthene	NV	NA	0.05 U	0.05 U	0.05 U	0.08	0.01 U	0.05 U	--	0.05 U	0.02 U	0.028
Chrysene	NV	NA	0.05 U	0.05 U	0.05 U	0.12	0.01 U	0.05 U	--	0.23	0.035	0.067
Dibenzo(a,h)anthracene	NV	NA	0.05 U	0.05 U	0.05 U	0.05 U	0.01 U	0.05 U	--	0.05 U	0.02 U	0.02 U
Indeno(1,2,3-cd)pyrene	NV	NA	0.05 U	0.05 U	0.05 U	0.14	0.01 U	0.05 U	--	0.062	0.02 U	0.035
Naphthalene	5	NA	--	--	--	--	--	--	--	--	0.10	0.02 U
cPAH TEQ[e][3]	0.19	NA	0.05 U	0.05 U	0.041	0.25	0.01 U	0.05 U	--	0.16	0.015	0.079

Provided to Builders Exchange of WA, Inc. For usage Conditions Agreement see www.bxwa.com - Always Verify Scal

Table 5-1
Confirmation Sample Analytical Results
Sebranke Property
Stanwood, Washington

Notes

Washington State Background Metals values are shown for reference only and are not shaded for exceedances.

Shading indicates values that exceed MTCA A screening criteria; non-detects (U) and rejected results (R) were not compared with screening criteria.

-- = not analyzed.

cPAH = carcinogenic polycyclic aromatic hydrocarbon.

ft bgs = feet below ground surface.

J = result is estimated.

J- = result is estimated, but may be biased low.

HCID = hydrocarbon identification.

mg/kg = milligrams per kilogram.

MTCA = Model Toxics Control Act.

NA = not applicable.

ND = non-detect.

NV = no value.

PAH = polycyclic aromatic hydrocarbon.

R = result is rejected. The analyte may or may not be present in the sample. Rejected results are shown at the method reporting limit.

TEQ = toxicity equivalency.

TPH = total petroleum hydrocarbons.

U = result is non-detect at the method reporting limit.

UJ = result is non-detect with an estimated reporting limit.

UST = underground storage tank.

VOC = volatile organic compound.

[a]Diesel+Oil is the sum of diesel-range and motor-oil-range hydrocarbons. When results are non-detect, half the reporting limit is used. When both results are non-detect, the highest reporting limit is shown. Rejected results are not included in the sum.

[b]Value is the lowest applicable screening value for diesel- and motor-oil-range hydrocarbons.

[c]Total xylenes are reported by the laboratory.

[d]No MTCA Method A screening value is available. Results are screened to MTCA Method B (lower of cancer and noncancer values).

[e]One-half the reporting limit is used for non-detect results in the cPAH TEQ calculation. When all cPAH results are non-detect, the highest reporting limit is shown.

References

[1]See Table 2-1.

[2]Ecology. 1994. *Natural Background Soil Metals Concentrations in Washington State.* Publication No. 94-115. Washington State Department of Ecology Toxics Cleanup Program: Olympia, WA. October.

[3]Ecology. 2015. *Evaluating the Human Health Toxicity of Carcinogenic PAHs (cPAHs) Using Toxicity Equivalency Factors (TEFs).* Implementation Memo No. 10. Publication No. 15-09-049. Washington State Department of Ecology, Toxics Cleanup Program. April.

Provided to Builders Exchange of WA, Inc. For usage Conditions Agreement see www.bxwa.com - Always Verify Scal

FIGURES



Provided to Builders Exchange of WA, Inc. For usage Conditions Agreement see www.bxwa.com - Always Verify Scal

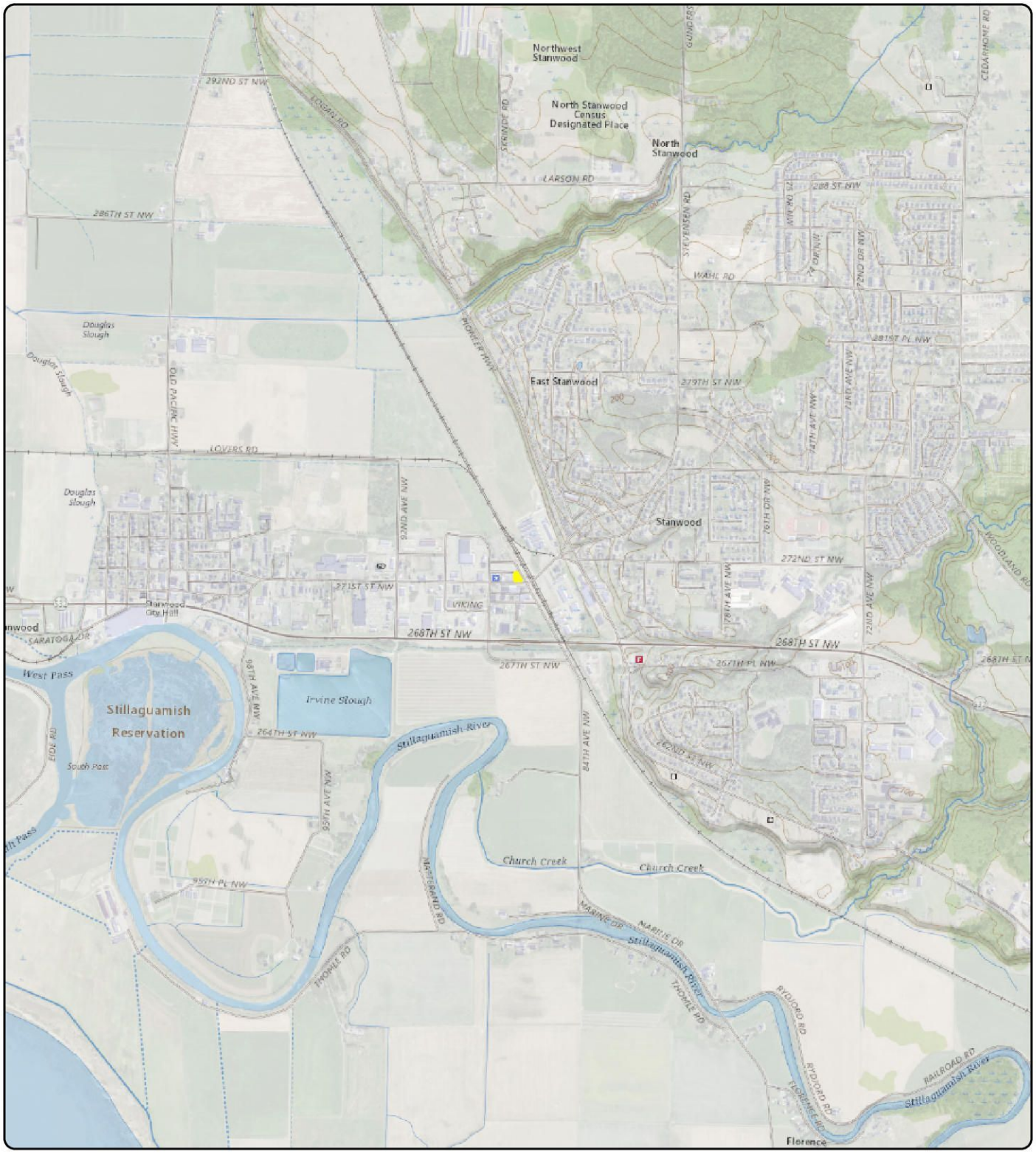

Notes
Property parcels: 00432400101500 and 00432400101400.
U.S. Geological Survey (2020) 7.5-minute topographic quadrangle: Stanwood.
Township 32 north, range 4 east, section 19.

Data Source
Property boundary obtained from Snohomish County.

Legend

Property Boundary

Figure 1-1
Property Location

Sebranke Property
Stanwood, Washington

0 1,000 2,000
Feet

MAUL FOSTER ALONGI
p. 971 544 2139 | www.maulfoster.com

This product is for informational purposes and may not have been prepared for, or be suitable for legal, engineering, or surveying purposes. Users of this information should review or consult the primary data and information sources to ascertain the usability of the information.
© 2023 Maul Foster & Alongi, Inc.

Path: X:\1030.02_06\Pro\M1030_02_006_002.aprx\Fig 1-1 Property Location
Print Date: 4/28/2023
Reviewed By: cwise
Produced By: stumer
Project: M1030.02.006

Provided to Builders Exchange of WA, Inc. For usage Conditions Agreement see www.bxwa.com - Always Verify Scal



Notes
Property parcels: 00432400101500 and 00432400101400.
All features are approximate.

Data Sources
Parcels obtained from Snohomish County; aerial photograph obtained from Esri; historical features were digitized from a 1953 Sanborn Fire Insurance Map.

MAUL FOSTER ALONGI
p. 971 544 2139 | www.maulfoster.com

This product is for informational purposes and may not have been prepared for, or be suitable for legal, engineering, or surveying purposes. Users of this information should review or consult the primary data and information sources to ascertain the usability of the information.
© 2023 Maul Foster & Alongi, Inc.

Legend

- Utility Pole
- **Previous Borings**
  - Soil
  - Soil and Groundwater
  - Monitoring Well
  - Monitoring Well, Decommissioned
- Property Parcel
- Snohomish County Parcel
- **Historical Features**
  - Filling station
  - Auto parts
  - Auto repair
  - Auto grease & oil storage

Figure 2-1
Property Features

Sebranke Property
Stanwood, Washington

0 20 40
Feet

Path: X:\1030.02_06\Figure2_1_Property_Features.mxd
Print Date: 5/8/2023
Reviewed By: cwise
Produced By: sturner
Project: M1030.02.006

Provided to Builders Exchange of WA, Inc. For usage Conditions Agreement see www.bxwa.com - Always Verify Scal

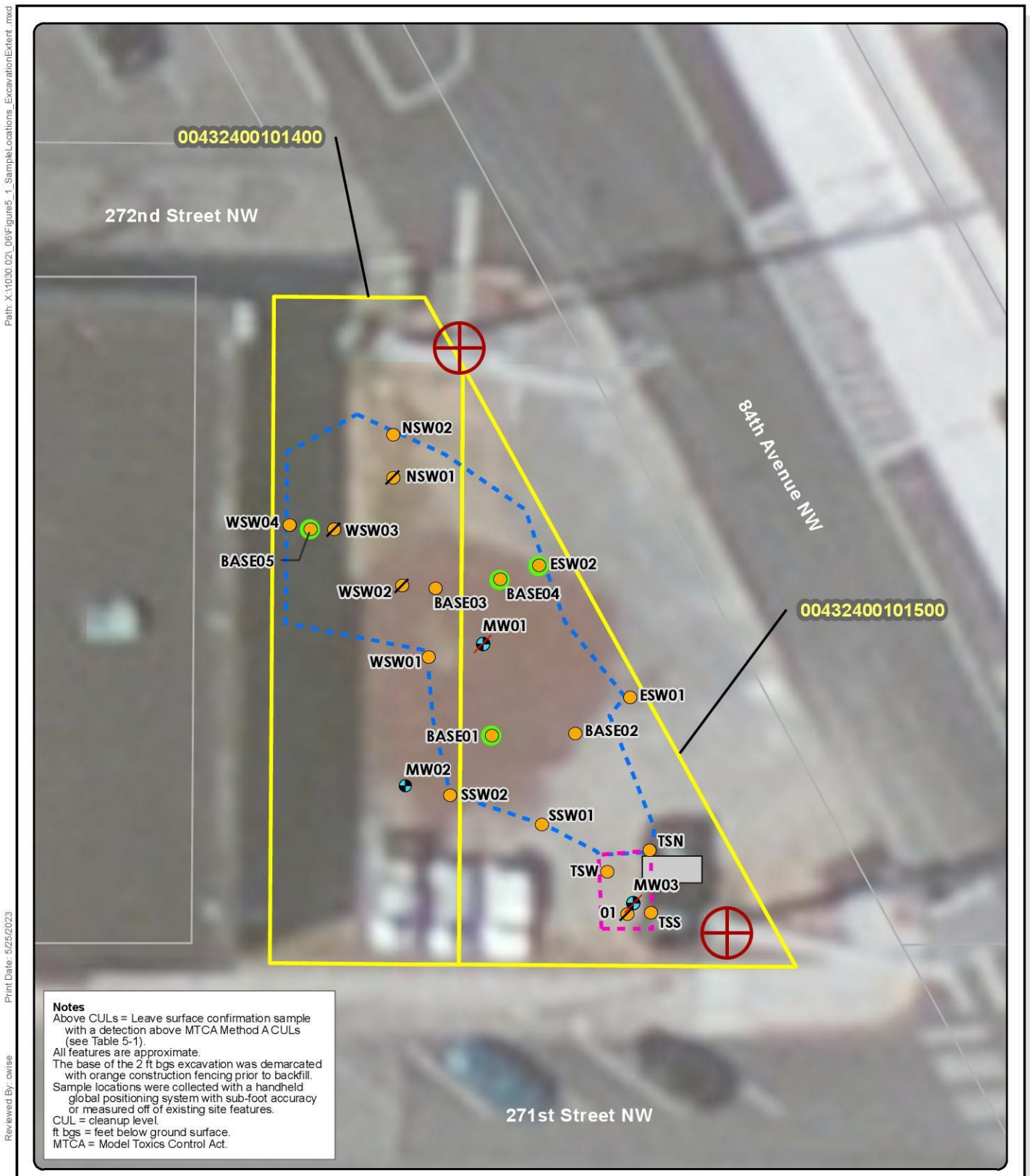

Figure 5-1
Sample Locations and Excavation Extent
Sebranke Property
Stanwood, Washington

MAUL FOSTER ALONGI
p. 971 544 2139 | www.maulfoster.com

This product is for informational purposes and may not have been prepared for, or be suitable for legal, engineering, or surveying purposes. Users of this information should review or consult the primary data and information sources to ascertain the usability of the information.
© 2023 Maul Foster & Alongi, Inc.

Path: X:\1030.02_06\Figure5_1_SampleLocations_ExcavationExtent.mxd
Print Date: 5/25/2023
Reviewed By: cwise
Produced By: sturner
Project: M1030.02.006

Provided to Builders Exchange of WA, Inc. For usage Conditions Agreement see www.bxwa.com - Always Verify Scal

APPENDIX A
SITE PHOTOGRAPHS

Provided to Builders Exchange of WA, Inc. For usage Conditions Agreement see www.bxwa.com - Always Verify Scal

MAUL FOSTER ALONGI

PHOTOGRAPHS

Project Name: Sebranke Remedial Action
Project Number: M1030.02.006
Location: 8627 271st Street NW, Stanwood, Washington

Photo No. 1.

Description
Initial site conditions during equipment mobilization, looking northwest.



Photo No. 2.

Description
Initial site conditions during equipment mobilization, looking southeast.



Provided to Builders Exchange of WA, Inc. For usage Conditions Agreement see www.bxwa.com - Always Verify Scal

MAUL FOSTER ALONGI

PHOTOGRAPHS

Project Name: Sebranke Remedial Action
Project Number: M1030.02.006
Location: 8627 271st Street NW, Stanwood, Washington

Photo No. 3.

Description
Deep excavation area with fill debris and organics.



Photo No. 4.

Description
Underground storage tank identified in southeast corner of deep excavation.



Provided to Builders Exchange of WA, Inc. For usage Conditions Agreement see www.bxwa.com - Always Verify Scal

MAUL FOSTER ALONGI

PHOTOGRAPHS

Project Name: Sebranke Remedial Action
Project Number: M1030.02.006
Location: 8627 271st Street NW, Stanwood, Washington

Photo No. 5.

Description
Deep excavation area with underground storage tank near utility pole, looking southeast.

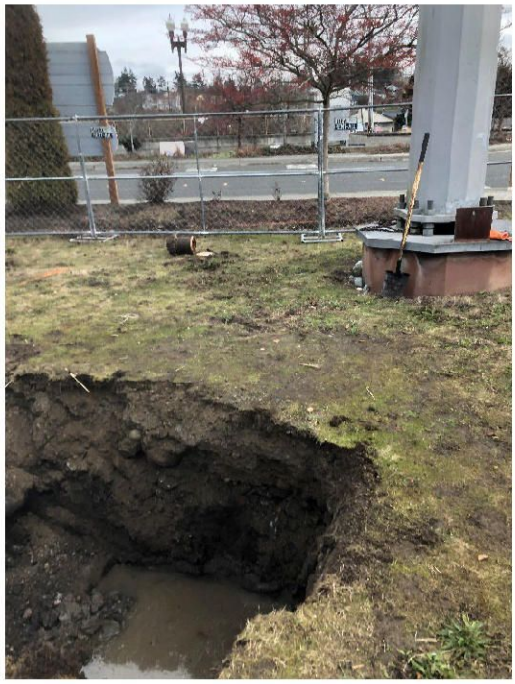

Photo No. 6.

Description
Shallow excavation in foreground with deep excavation area in background, looking southeast.



Provided to Builders Exchange of WA, Inc. For usage Conditions Agreement see www.bxwa.com - Always Verify Scal

MAUL FOSTER ALONGI

PHOTOGRAPHS

Project Name: Sebranke Remedial Action
Project Number: M1030.02.006
Location: 8627 271st Street NW, Stanwood, Washington

Photo No. 7.

Description
Shallow excavation area, looking northeast.



Photo No. 8.

Description
Triple-rinse during decommissioning of underground storage tank, looking southeast.



Provided to Builders Exchange of WA, Inc. For usage Conditions Agreement see www.bxwa.com - Always Verify Scal

MAUL FOSTER ALONGI

PHOTOGRAPHS

Project Name: Sebranke Remedial Action
Project Number: M1030.02.006
Location: 8627 271st Street NW, Stanwood, Washington

Photo No. 9.

Description
Application of in situ bioremediation amendment in deep excavation, looking northeast.



Photo No. 10.

Description
Significant organics observed in deep excavation adjacent to underground storage tank.



Provided to Builders Exchange of WA, Inc. For usage Conditions Agreement see www.bxwa.com - Always Verify Scal

MAUL FOSTER ALONGI

PHOTOGRAPHS

Project Name: Sebranke Remedial Action
Project Number: M1030.02.006
Location: 8627 271st Street NW, Stanwood, Washington

Photo No. 11.

Description
Application of controlled-density fill in underground storage tank for in-place decommissioning.



Photo No. 12.

Description
Marking fabric placed on base of shallow excavation.



Provided to Builders Exchange of WA, Inc. For usage Conditions Agreement see www.bxwa.com - Always Verify Scal

MAUL FOSTER ALONGI

PHOTOGRAPHS

Project Name: Sebranke Remedial Action
Project Number: M1030.02.006
Location: 8627 271st Street NW, Stanwood, Washington

Photo No. 13.

Description
Backfilling of southern portion of shallow excavation, looking north.



Photo No. 14.

Description
Backfilled deep excavation, looking east.



Provided to Builders Exchange of WA, Inc. For usage Conditions Agreement see www.bxwa.com - Always Verify Scal

MAUL FOSTER ALONGI

PHOTOGRAPHS

Project Name: Sebranke Remedial Action
Project Number: M1030.02.006
Location: 8627 271st Street NW, Stanwood, Washington

Photo No. 15.

Description
Northwest corner of shallow excavation with demarcation fabric on base, looking southeast.



Photo No. 16.

Description
Final site walk, looking southeast.



Provided to Builders Exchange of WA, Inc. For usage Conditions Agreement see www.bxwa.com - Always Verify Scal

MAUL FOSTER ALONGI

PHOTOGRAPHS

Project Name: Sebranke Remedial Action
Project Number: M1030.02.006
Location: 8627 271st Street NW, Stanwood, Washington

Photo No. 17.

Description
Final site walk, looking northeast.



Photo No. 18.

Description
Final site walk, looking west.



Provided to Builders Exchange of WA, Inc. For usage Conditions Agreement see www.bxwa.com - Always Verify Scal

MAUL FOSTER ALONGI

PHOTOGRAPHS

Project Name: Sebranke Remedial Action
Project Number: M1030.02.006
Location: 8627 271st Street NW, Stanwood, Washington

Photo No. 19.

Description
Final site walk, looking east.



Photo No. 20.

Description
Final site walk, looking north.



Provided to Builders Exchange of WA, Inc. For usage Conditions Agreement see www.bxwa.com - Always Verify Scal

APPENDIX B
DECOMMISSIONED WELL LOGS

Provided to Builders Exchange of WA, Inc. For usage Conditions Agreement see www.bxwa.com - Always Verify Scal

Geologic Borehole Log

MAUL FOSTER ALONGI

Project Number	Well Number	Sheet
1030.02.03	MW01	1 of 1

Project Name	Sebranke Property	TOC Elevation (feet)	
Project Location	8627 271st Street, Stanwood, WA	Surface Elevation (feet)	
Start/End Date	4/20/2021 to 4/20/2021	Northing	
Driller/Equipment	Holt Services, Inc./Geoprobe 7800	Easting	
Geologist/Engineer	A. Bixby	Total Depth of Borehole	20.0-feet
Sample Method	Direct Push	Outer Hole Diam	2.25-inch

Depth (feet, BGS)	Well Details	Water Levels	Sample Data: Percent Recovery	Sample Data: Sample ID	Sample Data: PID (ppm)	Lithologic Column	Soil Description
1				MW01-S-0.8			0.1 to 1.0 feet: SILTY SAND WITH GRAVEL (SM); tan; 30% fines, low plasticity; 55% sand, fine to coarse grained; 15% gravel, fine to medium size, subangular; loose; no odor; dry. (FILL)
2							@ 0.5 feet: Becomes moist; color changes to dark grayish brown.
3		▽	40	MW01-S-1.8			1.0 to 2.0 feet: CLAY (CL); dark grayish brown; 90% fines, medium to high plasticity; 10% sand, fine to coarse grained; soft; no odor; moist.
4							@ 1.1 feet: 100% woody debris; no odor.
5							@ 1.4 to 1.5 feet: 20% organic material (woody debris).
6							@ 1.5 feet: Color changes to gray.
7							@ 1.9 feet: 40% organic material (woody debris); black.
8			100				2.0 to 5.0 feet: No recovery.
9							5.0 to 7.4 feet: CLAY (CL); gray; 90% fines, medium to high plasticity; 10% sand, fine to coarse grained; soft; no odor; moist.
10							@ 5.4 feet: 40% organic material (woody debris); blackish brown.
11							@ 5.65 to 5.75 feet: Sand lens, coarse grained, angular.
12							@ 6.0 feet: 50% organic material (woody debris, rootlets).
13			100				@ 6.8 to 6.9 feet: Wood chunk, tan.
14							@ 7.2 feet: Color changes to black; organic odor.
15							7.4 to 15.0 feet: CLAY (CL); gray; 100% fines, medium to high plasticity; trace organic material (rootlets); soft; no odor; moist.
16							@ 12.8 feet: Plasticity decreases to low to medium.
17							@ 13.2 feet: Becomes firm.
18			100				15.0 to 16.0 feet: CLAY WITH GRAVEL (CL); gray; 80% fines, medium to high plasticity; 20% gravel, fine size, angular; soft; wet.
19							16.0 to 20.0 feet: CLAY (CL); gray; 100% fines, medium to high plasticity; trace organic material (rootlets); firm; no odor; wet.
20							

Total Depth = 20.0 feet bgs

NOTES:

1. bgs = below ground surface. 2. Depths are relative to feet below ground surface. 3. ID = identification. 4. PID = photoionization detector. 5. ppm = parts per million. 6. PID meter malfunctioned during drilling.

Borehole Completion Details

0 to 2.0 feet: Concrete.
2.0 to 3.0 feet: Bentonite chips hydrated with potable water.
3.0 to 15.0 feet: 12x20 silica sand filter pack.
15.0 to 20.0 feet: Slough.

Monitoring Well Completion Details

Washington State Department of Ecology Well No. BND327.
Traffic-grade, flush-mounted, monitoring well vault.
0 to 5.0 feet: 2-inch diameter, schedule 40, polyvinyl chloride riser pipe.
5.0 to 15.0 feet: 2-inch diameter, schedule 40, polyvinyl chloride, 0.010 machine slot, prepacked well screen with threaded polyvinyl chloride end cap.

▽ **Water level at approximately 3.55 feet bgs at time of sampling on 4/22/2021.**

MFA BOREHOLE W/WELL W:\GINTGINTW\PROJECTS\1030.02\GP05 TO GP07 AND MW01 TO MW03.GPJ 4/23/21

Provided to Builders Exchange of WA, Inc. For usage Conditions Agreement see www.bxwa.com - Always Verify Scal

Geologic Borehole Log

MAUL FOSTER ALONGI

Project Number	Well Number	Sheet
1030.02.03	MW03	1 of 1

Project Name	Sebranke Property	TOC Elevation (feet)	
Project Location	8627 271st Street, Stanwood, WA	Surface Elevation (feet)	
Start/End Date	4/20/2021 to 4/20/2021	Northing	
Driller/Equipment	Holt Services, Inc./Geoprobe 7800	Easting	
Geologist/Engineer	A. Bixby	Total Depth of Borehole	20.0-feet
Sample Method	Direct Push	Outer Hole Diam	2.25-inch

Depth (feet, BGS)	Well Details	Water Levels	Percent Recovery	Sample ID	PID (ppm)	Lithologic Column	Soil Description
1				MW01-S-1.0	87.1		0.0 to 1.6 feet: SILTY SAND WITH GRAVEL (SM); light grayish tan; 20% fines, low plasticity; 70% sand, fine to coarse grained; 10% gravel, fine size, subangular to angular; loose; no odor; dry. (FILL)
2							@ 0.9 feet: Color changes to brown; becomes moist.
3			54		40.9		@ 1.4 feet: 1-inch piece of gravel, angular.
4							1.6 to 1.9 feet: CONCRETE; gray.
5							1.9 to 2.7 feet: ORGANIC SOIL (OH); dark brown; 100% fines, medium to high plasticity; 30% organic material (woody debris); soft; no odor; moist.
6		▽			100.2		2.25 to 2.7 feet: CLAY (CL); gray; 100% fines, medium to high plasticity; soft; no odor; moist.
7					122.9		2.7 to 5.0 feet: No recovery.
8			72	MW01-S-7.0	261.1		5.0 to 6.2 feet: ORGANIC SOIL (OH); grayish brown; 85% fines, medium to high plasticity; 15% sand, fine to coarse grained; 30% organic material (woody debris); soft; moist.
9				MW01-S-8.0	25.0		@ 5.3 feet: Glass shard.
10							@ 5.4 to 5.5 feet: Sand lense; coarse.
11					14.8		@ 5.7 feet: Trace black staining; petroleum hydrocarbon-like odor.
12							@ 6.0 to 6.2 feet: Black staining; strong petroleum hydrocarbon-like odor.
13			4				6.2 to 8.6 feet: CLAY (CL); gray; 100% fines, medium plasticity; soft; splotchy black staining to 7 feet; trace organic material (rootlets); moist.
14							8.6 to 10.0 feet: No recovery.
15							10.0 to 10.2 feet: SILTY GRAVEL (GM); gray and brown; 30% fines, medium plasticity; 20% sand, fine to coarse grained; 50% gravel. fine to medium size, subangular to subrounded; loose; no odor; moist.
16					29.7		10.2 to 15.0 feet: No recovery; rock stuck in core barrel.
17							15.0 to 20.0 feet: CLAY (CL); gray; 100% fines, medium plasticity; soft; no odor; moist.
18			100		34.7		@ 18.0 feet: Becomes very stiff; plasticity decreases to low.
19							
20					8.7		

Total Depth = 20.0 feet bgs

NOTES:

1. bgs = below ground surface. 2. Depths are relative to feet below ground surface. 3. ID = identification. 4. PID = photoionization detector. 5. ppm = parts per million.

Borehole Completion Details

0 to 2.0 feet: Concrete.
2.0 to 3.0 feet: Bentonite chips hydrated with potable water.
3.0 to 15.0 feet: 12x20 silica sand filter pack.
15.0 to 20.0 feet: Slough.

Monitoring Well Completion Details

Washington State Department of Ecology Well No. BND329.
Traffic-grade, flush-mounted, monitoring well vault.
0 to 5.0 feet: 2-inch diameter, schedule 40, polyvinyl chloride riser pipe.
5.0 to 15.0 feet: 2-inch diameter, schedule 40, polyvinyl chloride, 0.010 machine slot, prepacked well screen with threaded polyvinyl chloride end cap.

▽ **Water level at approximately 6.15 feet bgs at time of sampling on 4/22/2021.**

MFA BOREHOLE W/WELL W:\GINTG\INTW\PROJECTS\1030.02\GP05 TO GP07 AND MW01 TO MW03.GPJ 4/23/21

Provided to Builders Exchange of WA, Inc. For usage Conditions Agreement see www.bxwa.com - Always Verify Scal

APPENDIX C

ANALYTICAL LABORATORY REPORTS



Provided to Builders Exchange of WA, Inc. For usage Conditions Agreement see www.bxwa.com - Always Verify Scal

FRIEDMAN & BRUYA, INC.

ENVIRONMENTAL CHEMISTS

James E. Bruya, Ph.D.
Yelena Aravkina, M.S.
Michael Erdahl, B.S.
Vineta Mills, M.S.
Eric Young, B.S.

5500 4th Avenue South
Seattle, WA 98108
(206) 285-8282
fbi@isomedia.com
www.friedmanandbruya.com

January 6, 2023

Carolyn Wise, Project Manager
Maul Foster Alongi
1329 N State St, Suite 301
Bellingham, WA 98225

Dear Ms Wise:

Included are the results from the testing of material submitted on January 4, 2023 from the Sebranke M1030.02.006, F&BI 301016 project. There are 12 pages included in this report. Any samples that may remain are currently scheduled for disposal in 30 days, or as directed by the Chain of Custody document. If you would like us to return your samples or arrange for long term storage at our offices, please contact us as soon as possible.

We appreciate this opportunity to be of service to you and hope you will call if you should have any questions.

Sincerely,

FRIEDMAN & BRUYA, INC.

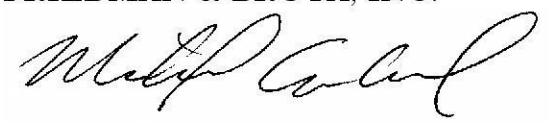

Michael Erdahl
Project Manager

Enclosures
MFA0106R.DOC

Provided to Builders Exchange of WA, Inc. For usage Conditions Agreement see www.bxwa.com - Always Verify Scal

FRIEDMAN & BRUYA, INC.

ENVIRONMENTAL CHEMISTS

CASE NARRATIVE

This case narrative encompasses samples received on January 4, 2023 by Friedman & Bruya, Inc. from the Maul Foster Alongi Sebranke M1030.02.006, F&BI 301016 project. Samples were logged in under the laboratory ID's listed below.

Laboratory ID	Maul Foster Alongi
301016 -01	WSW04-SS-1.0
301016 -02	BASE05-SS-2.0

All quality control requirements were acceptable.

Provided to Builders Exchange of WA, Inc. For usage Conditions Agreement see www.bxwa.com - Always Verify Scal

Date of Report: 01/06/23
Date Received: 01/04/23
Project: Sebranke M1030.02.006, F&BI 301016
Date Extracted: 01/03/23
Date Analyzed: 01/03/23

RESULTS FROM THE ANALYSIS OF THE SOIL SAMPLES FOR PERCENT MOISTURE USING ASTM D2216-98

Sample ID Laboratory ID	% Moisture
WSW04-SS-1.0 301016-01	9
BASE05-SS-2.0 301016-02	32

Provided to Builders Exchange of WA, Inc. For usage Conditions Agreement see www.bxwa.com - Always Verify Scal

Analysis For Total Metals By EPA Method 6020B

Client ID:	WSW04-SS-1.0	Client:	Maul Foster Alongi
Date Received:	01/04/23	Project:	Sebranke M1030.02.006
Date Extracted:	123213	Lab ID:	301016-01
Date Analyzed:	01/04/23	Data File:	301016-01.041
Matrix:	Soil	Instrument:	ICPMS2
Units:	mg/kg (ppm) Dry Weight	Operator:	SP

Analyte:	Concentration mg/kg (ppm)
Arsenic	1.68
Cadmium	<1
Lead	12.3

Provided to Builders Exchange of WA, Inc. For usage Conditions Agreement see www.bxwa.com - Always Verify Scal

Analysis For Total Metals By EPA Method 6020B

Client ID:	BASE05-SS-2.0	Client:	Maul Foster Alongi
Date Received:	01/04/23	Project:	Sebranke M1030.02.006
Date Extracted:	01/04/23	Lab ID:	301016-02
Date Analyzed:	01/04/23	Data File:	301016-02.042
Matrix:	Soil	Instrument:	ICPMS2
Units:	mg/kg (ppm) Dry Weight	Operator:	SP

Analyte:	Concentration mg/kg (ppm)
Arsenic	5.40
Cadmium	<1

Provided to Builders Exchange of WA, Inc. For usage Conditions Agreement see www.bxwa.com - Always Verify Scal

Analysis For Total Metals By EPA Method 6020B

Client ID:	BASE05-SS-2.0	Client:	Maul Foster Alongi
Date Received:	01/04/23	Project:	Sebranke M1030.02.006
Date Extracted:	01/04/23	Lab ID:	301016-02 x10
Date Analyzed:	01/04/23	Data File:	301016-02 x10.050
Matrix:	Soil	Instrument:	ICPMS2
Units:	mg/kg (ppm) Dry Weight	Operator:	SP

Analyte:	Concentration mg/kg (ppm)
Lead	344

Provided to Builders Exchange of WA, Inc. For usage Conditions Agreement see www.bxwa.com - Always Verify Scal

Analysis For Total Metals By EPA Method 6020B

Client ID:	Method Blank	Client:	Maul Foster Alongi
Date Received:	Not Applicable	Project:	Sebranke M1030.02.006
Date Extracted:	01/04/23	Lab ID:	I3-0003 mb2
Date Analyzed:	01/04/23	Data File:	I3-0003 mb2.040
Matrix:	Soil	Instrument:	ICPMS2
Units:	mg/kg (ppm) Dry Weight	Operator:	SP

Analyte:	Concentration mg/kg (ppm)
Arsenic	<1
Cadmium	<1
Lead	<1

Provided to Builders Exchange of WA, Inc. For usage Conditions Agreement see www.bxwa.com - Always Verify Scal

Analysis For Semivolatile Compounds By EPA Method 8270E

Client Sample ID:	WSW04-SS-1.0	Client:	Maul Foster Alongi
Date Received:	01/04/23	Project:	Sebranke M1030.02.006
Date Extracted:	01/04/23	Lab ID:	301016-01 1/25
Date Analyzed:	01/04/23	Data File:	010416.D
Matrix:	Soil	Instrument:	GCMS12
Units:	mg/kg (ppm) Dry Weight	Operator:	VM

Surrogates:	% Recovery:	Lower Limit:	Upper Limit:
Terphenyl-d14	89 d	31	167

Compounds:	Concentration mg/kg (ppm)
Benz(a)anthracene	<0.05
Chrysene	<0.05
Benzo(a)pyrene	<0.05
Benzo(b)fluoranthene	<0.05
Benzo(k)fluoranthene	<0.05
Indeno(1,2,3-cd)pyrene	<0.05
Dibenz(a,h)anthracene	<0.05

Provided to Builders Exchange of WA, Inc. For usage Conditions Agreement see www.bxwa.com - Always Verify Scal

Analysis For Semivolatile Compounds By EPA Method 8270E

Client Sample ID:	BASE05-SS-2.0	Client:	Maul Foster Alongi
Date Received:	01/04/23	Project:	Sebranke M1030.02.006
Date Extracted:	01/04/23	Lab ID:	301016-02 1/25
Date Analyzed:	01/04/23	Data File:	010417.D
Matrix:	Soil	Instrument:	GCMS12
Units:	mg/kg (ppm) Dry Weight	Operator:	VM

Surrogates:	% Recovery:	Lower Limit:	Upper Limit:
Terphenyl-d14	81 d	31	167

Compounds:	Concentration mg/kg (ppm)
Benz(a)anthracene	<0.05
Chrysene	<0.05
Benzo(a)pyrene	<0.05
Benzo(b)fluoranthene	0.059
Benzo(k)fluoranthene	<0.05
Indeno(1,2,3-cd)pyrene	<0.05
Dibenz(a,h)anthracene	<0.05

Provided to Builders Exchange of WA, Inc. For usage Conditions Agreement see www.bxwa.com - Always Verify Scal

Analysis For Semivolatile Compounds By EPA Method 8270E

Client Sample ID:	Method Blank	Client:	Maul Foster Alongi
Date Received:	Not Applicable	Project:	Sebranke M1030.02.006
Date Extracted:	01/04/23	Lab ID:	03-046 mb2 1/5
Date Analyzed:	01/04/23	Data File:	010415.D
Matrix:	Soil	Instrument:	GCMS12
Units:	mg/kg (ppm) Dry Weight	Operator:	VM

Surrogates:	% Recovery:	Lower Limit:	Upper Limit:
Terphenyl-d14	103	31	167

Compounds:	Concentration mg/kg (ppm)
Benz(a)anthracene	<0.01
Chrysene	<0.01
Benzo(a)pyrene	<0.01
Benzo(b)fluoranthene	<0.01
Benzo(k)fluoranthene	<0.01
Indeno(1,2,3-cd)pyrene	<0.01
Dibenz(a,h)anthracene	<0.01

Provided to Builders Exchange of WA, Inc. For usage Conditions Agreement see www.bxwa.com - Always Verify Scal

Date of Report: 01/06/23
Date Received: 01/04/23
Project: Sebranke M1030.02.006, F&BI 301016

QUALITY ASSURANCE RESULTS FOR THE ANALYSIS OF SOIL SAMPLES FOR TOTAL METALS USING EPA METHOD 6020B

Laboratory Code: 212096-01 (Matrix Spike)

Analyte	Reporting Units	Spike Level	Sample Result (Wet wt)	Percent Recovery MS	Percent Recovery MSD	Acceptance Criteria	RPD (Limit 20)
Arsenic	mg/kg (ppm)	10	1.83	104	101	75-125	3
Cadmium	mg/kg (ppm)	10	<1	97	98	75-125	1
Lead	mg/kg (ppm)	50	1.85	88	89	75-125	1

Laboratory Code: Laboratory Control Sample

Analyte	Reporting Units	Spike Level	Percent Recovery LCS	Acceptance Criteria
Arsenic	mg/kg (ppm)	10	100	80-120
Cadmium	mg/kg (ppm)	10	104	80-120
Lead	mg/kg (ppm)	50	107	80-120

Provided to Builders Exchange of WA, Inc. For usage Conditions Agreement see www.bxwa.com - Always Verify Scal

Date of Report: 01/06/23
Date Received: 01/04/23
Project: Sebranke M1030.02.006, F&BI 301016

QUALITY ASSURANCE RESULTS FOR THE ANALYSIS OF SOIL SAMPLES FOR SEMIVOLATILES BY EPA METHOD 8270E

Laboratory Code: 301003-01 1/5 (Matrix Spike)

Analyte	Reporting Units	Spike Level	Sample Result (Wet wt)	Percent Recovery MS	Percent Recovery MSD	Acceptance Criteria	RPD (Limit 20)
Benz(a)anthracene	mg/kg (ppm)	0.83	0.025	92	95	50-150	3
Chrysene	mg/kg (ppm)	0.83	0.034	95	97	50-150	2
Benzo(a)pyrene	mg/kg (ppm)	0.83	0.031	88	89	50-150	1
Benzo(b)fluoranthene	mg/kg (ppm)	0.83	0.037	90	87	50-150	3
Benzo(k)fluoranthene	mg/kg (ppm)	0.83	0.013	88	89	50-150	1
Indeno(1,2,3-cd)pyrene	mg/kg (ppm)	0.83	0.028	91	93	41-134	2
Dibenz(a,h)anthracene	mg/kg (ppm)	0.83	<0.01	85	90	44-130	6

Laboratory Code: Laboratory Control Sample 1/5

Analyte	Reporting Units	Spike Level	Percent Recovery LCS	Acceptance Criteria
Benz(a)anthracene	mg/kg (ppm)	0.83	96	70-130
Chrysene	mg/kg (ppm)	0.83	102	70-130
Benzo(a)pyrene	mg/kg (ppm)	0.83	92	68-120
Benzo(b)fluoranthene	mg/kg (ppm)	0.83	94	69-125
Benzo(k)fluoranthene	mg/kg (ppm)	0.83	94	70-130
Indeno(1,2,3-cd)pyrene	mg/kg (ppm)	0.83	90	67-129
Dibenz(a,h)anthracene	mg/kg (ppm)	0.83	86	67-128

Provided to Builders Exchange of WA, Inc. For usage Conditions Agreement see www.bxwa.com - Always Verify Scal

Data Qualifiers & Definitions

a - The analyte was detected at a level less than five times the reporting limit. The RPD results may not provide reliable information on the variability of the analysis.

b - The analyte was spiked at a level that was less than five times that present in the sample. Matrix spike recoveries may not be meaningful.

ca - The calibration results for the analyte were outside of acceptance criteria. The value reported is an estimate.

c - The presence of the analyte may be due to carryover from previous sample injections.

cf - The sample was centrifuged prior to analysis.

d - The sample was diluted. Detection limits were raised and surrogate recoveries may not be meaningful.

dv - Insufficient sample volume was available to achieve normal reporting limits.

f - The sample was laboratory filtered prior to analysis.

fb - The analyte was detected in the method blank.

fc - The analyte is a common laboratory and field contaminant.

hr - The sample and duplicate were reextracted and reanalyzed. RPD results were still outside of control limits. Variability is attributed to sample inhomogeneity.

hs - Headspace was present in the container used for analysis.

ht – The analysis was performed outside the method or client-specified holding time requirement.

ip - Recovery fell outside of control limits due to sample matrix effects.

j - The analyte concentration is reported below the lowest calibration standard. The value reported is an estimate.

J - The internal standard associated with the analyte is out of control limits. The reported concentration is an estimate.

jl - The laboratory control sample(s) percent recovery and/or RPD were out of control limits. The reported concentration should be considered an estimate.

js - The surrogate associated with the analyte is out of control limits. The reported concentration should be considered an estimate.

lc - The presence of the analyte is likely due to laboratory contamination.

L - The reported concentration was generated from a library search.

nm - The analyte was not detected in one or more of the duplicate analyses. Therefore, calculation of the RPD is not applicable.

pc - The sample was received with incorrect preservation or in a container not approved by the method. The value reported should be considered an estimate.

ve - The analyte response exceeded the valid instrument calibration range. The value reported is an estimate.

vo - The value reported fell outside the control limits established for this analyte.

x - The sample chromatographic pattern does not resemble the fuel standard used for quantitation.

Provided to Builders Exchange of WA, Inc. For usage Conditions Agreement see www.bxwa.com - Always Verify Scal

SAMPLE CHAIN OF CUSTODY

01/04/23 NI

Page # 1 of 1

301016

Report To Carolyn Wise

Company Maul Foster Alongi

Address 1329 N State St. Ste 301

City, State, ZIP Bellingham, WA 98225

Phone 3606905982 Email cwise@maulfoster.com

SAMPLERS (*signature*)

PROJECT NAME: Sebranke

PO #: M1030.02.006

REMARKS

Project specific RLs? - Yes (No)

INVOICE TO: C. Wise

TURNAROUND TIME
- ☐ Standard turnaround
- ☒ RUSH 24 hr

Rush charges authorized by:

SAMPLE DISPOSAL
- ☒ Archive samples
- ☐ Other

Default: Dispose after 30 days

Sample ID	Lab ID	Date Sampled	Time Sampled	Sample Type	# of Jars	NWTPH-Dx	NWTPH-Gx	BTEX EPA 8021	NWTPH-HCID	VOCs EPA 8260	PAHs EPA 8270	PCBs EPA 8082	cPAHs	As, Cd, Pb 6020			Notes
WSWØ4-SS-1.0	01	1/3/22	1030	S	1								X	X			
BASEØ5-SS-2.0	02	1/3/22	1015	S	1								X	X			

ANALYSES REQUESTED

SIGNATURE	PRINT NAME	COMPANY	DATE	TIME
Relinquished by:	Carolyn Wise	MFA	1/3/22	1250
Received by:	ANH PHAN	FSB	01/04/23	09:13
Relinquished by:				
Received by:		Samples received at Ø °C		

Friedman & Bruya, Inc.
3012 16th Avenue West
Seattle, WA 98119-2029
Ph. (206) 285-8282

Provided to Builders Exchange of WA, Inc. For usage Conditions Agreement see www.bxwa.com - Always Verify Scal

FRIEDMAN & BRUYA, INC.

ENVIRONMENTAL CHEMISTS

James E. Bruya, Ph.D.
Yelena Aravkina, M.S.
Michael Erdahl, B.S.
Vineta Mills, M.S.
Eric Young, B.S.

5500 4th Avenue South
Seattle, WA 98108
(206) 285-8282
fbi@isomedia.com
www.friedmanandbruya.com

January 12, 2023

Carolyn Wise, Project Manager
Maul Foster Alongi
1329 N State St, Suite 301
Bellingham, WA 98225

Dear Ms Wise:

Included is the amended report from the testing of material submitted on December 6, 2022 from the Sebranke Remedial Action M1030.02.006, F&BI 212084 project. The 6020 matrix spike comparing the results to the full strength analysis of the source sample have been included.

We appreciate this opportunity to be of service to you and hope you will call if you should have any questions.

Sincerely,

FRIEDMAN & BRUYA, INC.



Michael Erdahl
Project Manager

Enclosures
c: Eveleyn Lundeen
MFA1209R.DOC

Provided to Builders Exchange of WA, Inc. For usage Conditions Agreement see www.bxwa.com - Always Verify Scal

FRIEDMAN & BRUYA, INC.

ENVIRONMENTAL CHEMISTS

James E. Bruya, Ph.D.
Yelena Aravkina, M.S.
Michael Erdahl, B.S.
Vineta Mills, M.S.
Eric Young, B.S.

5500 4th Avenue South
Seattle, WA 98108
(206) 285-8282
fbi@isomedia.com
www.friedmanandbruya.com

December 9, 2022

Carolyn Wise, Project Manager
Maul Foster Alongi
1329 N State St, Suite 301
Bellingham, WA 98225

Dear Ms Wise:

Included are the results from the testing of material submitted on December 6, 2022 from the Sebranke Remedial Action M1030.02.006, F&BI 212084 project. There are 21 pages included in this report. Any samples that may remain are currently scheduled for disposal in 30 days, or as directed by the Chain of Custody document. If you would like us to return your samples or arrange for long term storage at our offices, please contact us as soon as possible.

We appreciate this opportunity to be of service to you and hope you will call if you should have any questions.

Sincerely,

FRIEDMAN & BRUYA, INC.

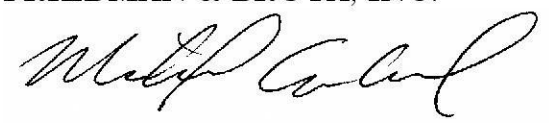

Michael Erdahl
Project Manager

Enclosures
c: Eveleyn Lundeen
MFA1209R.DOC

Provided to Builders Exchange of WA, Inc. For usage Conditions Agreement see www.bxwa.com - Always Verify Scal

FRIEDMAN & BRUYA, INC.

ENVIRONMENTAL CHEMISTS

CASE NARRATIVE

This case narrative encompasses samples received on December 6, 2022 by Friedman & Bruya, Inc. from the Maul Foster Alongi Sebranke Remedial Action M1030.02.006, F&BI 212084 project. Samples were logged in under the laboratory ID's listed below.

Laboratory ID	Maul Foster Alongi
212084 -01	01-SS-6.0
212084 -02	ESW01-SS-1.0
212084 -03	SSW01-SS-1.0
212084 -04	SSW02-SS-1.0
212084 -05	WSW01-SS-1.0
212084 -06	BASE01-SS-1.0

The 8270E matrix spike and matrix spike duplicate failed the relative percent difference for several compounds. The laboratory control sample passed the acceptance criteria, therefore the results were due to matrix effect.

All other quality control requirements were acceptable.

Provided to Builders Exchange of WA, Inc. For usage Conditions Agreement see www.bxwa.com - Always Verify Scal

Date of Report: 12/09/22
Date Received: 12/06/22
Project: Sebranke Remedial Action M1030.02.006, F&BI 212084
Date Extracted: NA
Date Analyzed: 12/07/22

RESULTS FROM THE ANALYSIS OF THE SOIL SAMPLES FOR PERCENT MOISTURE USING ASTM D2216-98

Sample ID Laboratory ID	% Moisture
01-SS-6.0 212084-01	75
ESW01-SS-1.0 212084-02	11
SSW01-SS-1.0 212084-03	6
SSW02-SS-1.0 212084-04	7
WSW01-SS-1.0 212084-05	10
BASE01-SS-1.0 212084-06	20

Provided to Builders Exchange of WA, Inc. For usage Conditions Agreement see www.bxwa.com - Always Verify Scal

Date of Report: 12/09/22
Date Received: 12/06/22
Project: Sebranke Remedial Action M1030.02.006, F&BI 212084
Date Extracted: 12/07/22
Date Analyzed: 12/07/22

RESULTS FROM THE ANALYSIS OF SOIL SAMPLES FOR TOTAL PETROLEUM HYDROCARBONS AS DIESEL AND MOTOR OIL USING METHOD NWTPH-Dx

Results Reported on a Dry Weight Basis
Results Reported as mg/kg (ppm)

Sample ID Laboratory ID	Diesel Range (C_{10}-C_{25})	Motor Oil Range (C_{25}-C_{36})	Surrogate (% Recovery) (Limit 50-150)
01-SS-6.0 212084-01 1/2	<100	<500	93
ESW01-SS-1.0 212084-02	<50	<250	91
SSW01-SS-1.0 212084-03	<50	<250	86
SSW02-SS-1.0 212084-04	<50	<250	87
WSW01-SS-1.0 212084-05	<50	<250	87
BASE01-SS-1.0 212084-06	<50	<250	96
Method Blank 02-2905 MB	<50	<250	96

Provided to Builders Exchange of WA, Inc. For usage Conditions Agreement see www.bxwa.com - Always Verify Scal

FRIEDMAN & BRUYA, INC.

ENVIRONMENTAL CHEMISTS

Analysis For Total Metals By EPA Method 6020B

Client ID:	ESW01-SS-1.0	Client:	Maul Foster Alongi
Date Received:	12/06/22	Project:	M1030.02.006, F&BI 212084
Date Extracted:	12/07/22	Lab ID:	212084-02
Date Analyzed:	12/07/22	Data File:	212084-02.052
Matrix:	Soil	Instrument:	ICPMS2
Units:	mg/kg (ppm) Dry Weight	Operator:	SP

Analyte:	Concentration mg/kg (ppm)
Arsenic	3.77
Cadmium	<1

Provided to Builders Exchange of WA, Inc. For usage Conditions Agreement see www.bxwa.com - Always Verify Scal

Analysis For Total Metals By EPA Method 6020B

Client ID:	ESW01-SS-1.0	Client:	Maul Foster Alongi
Date Received:	12/06/22	Project:	M1030.02.006, F&BI 212084
Date Extracted:	12/07/22	Lab ID:	212084-02 x5
Date Analyzed:	12/07/22	Data File:	212084-02 x5.075
Matrix:	Soil	Instrument:	ICPMS2
Units:	mg/kg (ppm) Dry Weight	Operator:	SP

Analyte:	Concentration mg/kg (ppm)
Lead	123

Provided to Builders Exchange of WA, Inc. For usage Conditions Agreement see www.bxwa.com - Always Verify Scal

Analysis For Total Metals By EPA Method 6020B

Client ID:	SSW01-SS-1.0	Client:	Maul Foster Alongi
Date Received:	12/06/22	Project:	M1030.02.006, F&BI 212084
Date Extracted:	12/07/22	Lab ID:	212084-03
Date Analyzed:	12/07/22	Data File:	212084-03.055
Matrix:	Soil	Instrument:	ICPMS2
Units:	mg/kg (ppm) Dry Weight	Operator:	SP

Analyte:	Concentration mg/kg (ppm)
Arsenic	3.19
Cadmium	<1
Lead	19.1

Provided to Builders Exchange of WA, Inc. For usage Conditions Agreement see www.bxwa.com - Always Verify Scal

Analysis For Total Metals By EPA Method 6020B

Client ID:	SSW02-SS-1.0	Client:	Maul Foster Alongi
Date Received:	12/06/22	Project:	M1030.02.006, F&BI 212084
Date Extracted:	12/07/22	Lab ID:	212084-04
Date Analyzed:	12/07/22	Data File:	212084-04.056
Matrix:	Soil	Instrument:	ICPMS2
Units:	mg/kg (ppm) Dry Weight	Operator:	SP

Analyte:	Concentration mg/kg (ppm)
Arsenic	3.34
Cadmium	<1
Lead	28.5

Provided to Builders Exchange of WA, Inc. For usage Conditions Agreement see www.bxwa.com - Always Verify Scal

Analysis For Total Metals By EPA Method 6020B

Client ID:	WSW01-SS-1.0	Client:	Maul Foster Alongi
Date Received:	12/06/22	Project:	M1030.02.006, F&BI 212084
Date Extracted:	12/07/22	Lab ID:	212084-05
Date Analyzed:	12/07/22	Data File:	212084-05.057
Matrix:	Soil	Instrument:	ICPMS2
Units:	mg/kg (ppm) Dry Weight	Operator:	SP

Analyte:	Concentration mg/kg (ppm)
Arsenic	3.66
Cadmium	<1
Lead	34.9

Provided to Builders Exchange of WA, Inc. For usage Conditions Agreement see www.bxwa.com - Always Verify Scal

Analysis For Total Metals By EPA Method 6020B

Client ID:	BASE01-SS-1.0	Client:	Maul Foster Alongi
Date Received:	12/06/22	Project:	M1030.02.006, F&BI 212084
Date Extracted:	12/07/22	Lab ID:	212084-06
Date Analyzed:	12/07/22	Data File:	212084-06.060
Matrix:	Soil	Instrument:	ICPMS2
Units:	mg/kg (ppm) Dry Weight	Operator:	SP

Analyte:	Concentration mg/kg (ppm)
Arsenic	4.57
Cadmium	1.04

Provided to Builders Exchange of WA, Inc. For usage Conditions Agreement see www.bxwa.com - Always Verify Scal

Analysis For Total Metals By EPA Method 6020B

Client ID:	BASE01-SS-1.0	Client:	Maul Foster Alongi
Date Received:	12/06/22	Project:	M1030.02.006, F&BI 212084
Date Extracted:	12/07/22	Lab ID:	212084-06 x10
Date Analyzed:	12/07/22	Data File:	212084-06 x10.103
Matrix:	Soil	Instrument:	ICPMS2
Units:	mg/kg (ppm) Dry Weight	Operator:	SP

Analyte:	Concentration mg/kg (ppm)
Lead	373

Provided to Builders Exchange of WA, Inc. For usage Conditions Agreement see www.bxwa.com - Always Verify Scal

Analysis For Total Metals By EPA Method 6020B

Client ID:	Method Blank	Client:	Maul Foster Alongi
Date Received:	NA	Project:	M1030.02.006, F&BI 212084
Date Extracted:	12/07/22	Lab ID:	I2-872 mb
Date Analyzed:	12/07/22	Data File:	I2-872 mb.036
Matrix:	Soil	Instrument:	ICPMS2
Units:	mg/kg (ppm) Dry Weight	Operator:	SP

Analyte:	Concentration mg/kg (ppm)
Arsenic	<1
Cadmium	<1
Lead	<1

Provided to Builders Exchange of WA, Inc. For usage Conditions Agreement see www.bxwa.com - Always Verify Scal

Analysis For Semivolatile Compounds By EPA Method 8270E

Client Sample ID:	ESW01-SS-1.0	Client:	Maul Foster Alongi
Date Received:	12/06/22	Project:	M1030.02.006, F&BI 212084
Date Extracted:	12/07/22	Lab ID:	212084-02 1/25
Date Analyzed:	12/08/22	Data File:	120741.D
Matrix:	Soil	Instrument:	GCMS9
Units:	mg/kg (ppm) Dry Weight	Operator:	VM

Surrogates:	% Recovery:	Lower Limit:	Upper Limit:
Nitrobenzene-d5	56 d	10	198
2-Fluorobiphenyl	91 d	45	117
2,4,6-Tribromophenol	115 d	11	158
Terphenyl-d14	116 d	50	124

Compounds:	Concentration mg/kg (ppm)
Benz(a)anthracene	<0.05
Chrysene	<0.05
Benzo(a)pyrene	<0.05
Benzo(b)fluoranthene	0.055
Benzo(k)fluoranthene	<0.05
Indeno(1,2,3-cd)pyrene	<0.05
Dibenz(a,h)anthracene	<0.05

Provided to Builders Exchange of WA, Inc. For usage Conditions Agreement see www.bxwa.com - Always Verify Scal

Analysis For Semivolatile Compounds By EPA Method 8270E

Client Sample ID:	SSW01-SS-1.0	Client:	Maul Foster Alongi
Date Received:	12/06/22	Project:	M1030.02.006, F&BI 212084
Date Extracted:	12/07/22	Lab ID:	212084-03 1/25
Date Analyzed:	12/08/22	Data File:	120742.D
Matrix:	Soil	Instrument:	GCMS9
Units:	mg/kg (ppm) Dry Weight	Operator:	VM

Surrogates:	% Recovery:	Lower Limit:	Upper Limit:
Nitrobenzene-d5	55 d	10	198
2-Fluorobiphenyl	87 d	45	117
2,4,6-Tribromophenol	112 d	11	158
Terphenyl-d14	110 d	50	124

Compounds:	Concentration mg/kg (ppm)
Benz(a)anthracene	<0.05
Chrysene	<0.05
Benzo(a)pyrene	<0.05
Benzo(b)fluoranthene	<0.05
Benzo(k)fluoranthene	<0.05
Indeno(1,2,3-cd)pyrene	<0.05
Dibenz(a,h)anthracene	<0.05

Provided to Builders Exchange of WA, Inc. For usage Conditions Agreement see www.bxwa.com - Always Verify Scal

Analysis For Semivolatile Compounds By EPA Method 8270E

Client Sample ID:	SSW02-SS-1.0	Client:	Maul Foster Alongi
Date Received:	12/06/22	Project:	M1030.02.006, F&BI 212084
Date Extracted:	12/07/22	Lab ID:	212084-04 1/25
Date Analyzed:	12/08/22	Data File:	120743.D
Matrix:	Soil	Instrument:	GCMS9
Units:	mg/kg (ppm) Dry Weight	Operator:	VM

Surrogates:	% Recovery:	Lower Limit:	Upper Limit:
Nitrobenzene-d5	55 d	10	198
2-Fluorobiphenyl	90 d	45	117
2,4,6-Tribromophenol	115 d	11	158
Terphenyl-d14	118 d	50	124

Compounds:	Concentration mg/kg (ppm)
Benz(a)anthracene	<0.05
Chrysene	<0.05
Benzo(a)pyrene	<0.05
Benzo(b)fluoranthene	<0.05
Benzo(k)fluoranthene	<0.05
Indeno(1,2,3-cd)pyrene	<0.05
Dibenz(a,h)anthracene	<0.05

Provided to Builders Exchange of WA, Inc. For usage Conditions Agreement see www.bxwa.com - Always Verify Scal

Analysis For Semivolatile Compounds By EPA Method 8270E

Client Sample ID:	WSW01-SS-1.0	Client:	Maul Foster Alongi
Date Received:	12/06/22	Project:	M1030.02.006, F&BI 212084
Date Extracted:	12/07/22	Lab ID:	212084-05 1/25
Date Analyzed:	12/07/22	Data File:	120718.D
Matrix:	Soil	Instrument:	GCMS12
Units:	mg/kg (ppm) Dry Weight	Operator:	VM

Surrogates:	% Recovery:	Lower Limit:	Upper Limit:
Nitrobenzene-d5	69 d	10	198
2-Fluorobiphenyl	83 d	45	117
2,4,6-Tribromophenol	81 d	11	158
Terphenyl-d14	100 d	50	124

Compounds:	Concentration mg/kg (ppm)
Benz(a)anthracene	<0.05
Chrysene	<0.05
Benzo(a)pyrene	<0.05
Benzo(b)fluoranthene	0.058
Benzo(k)fluoranthene	<0.05
Indeno(1,2,3-cd)pyrene	<0.05
Dibenz(a,h)anthracene	<0.05

Provided to Builders Exchange of WA, Inc. For usage Conditions Agreement see www.bxwa.com - Always Verify Scal

Analysis For Semivolatile Compounds By EPA Method 8270E

Client Sample ID:	BASE01-SS-1.0	Client:	Maul Foster Alongi
Date Received:	12/06/22	Project:	M1030.02.006, F&BI 212084
Date Extracted:	12/07/22	Lab ID:	212084-06 1/25
Date Analyzed:	12/07/22	Data File:	120719.D
Matrix:	Soil	Instrument:	GCMS12
Units:	mg/kg (ppm) Dry Weight	Operator:	VM

Surrogates:	% Recovery:	Lower Limit:	Upper Limit:
Nitrobenzene-d5	75 d	10	198
2-Fluorobiphenyl	85 d	45	117
2,4,6-Tribromophenol	77 d	11	158
Terphenyl-d14	100 d	50	124

Compounds:	Concentration mg/kg (ppm)
Benz(a)anthracene	0.27
Chrysene	0.45
Benzo(a)pyrene	0.55
Benzo(b)fluoranthene	0.93
Benzo(k)fluoranthene	0.29
Indeno(1,2,3-cd)pyrene	0.29
Dibenz(a,h)anthracene	0.066

Provided to Builders Exchange of WA, Inc. For usage Conditions Agreement see www.bxwa.com - Always Verify Scal

Analysis For Semivolatile Compounds By EPA Method 8270E

Client Sample ID:	Method Blank	Client:	Maul Foster Alongi
Date Received:	Not Applicable	Project:	M1030.02.006, F&BI 212084
Date Extracted:	12/07/22	Lab ID:	02-2906 mb 1/5
Date Analyzed:	12/08/22	Data File:	120730.D
Matrix:	Soil	Instrument:	GCMS9
Units:	mg/kg (ppm) Dry Weight	Operator:	VM

Surrogates:	% Recovery:	Lower Limit:	Upper Limit:
Nitrobenzene-d5	93	10	198
2-Fluorobiphenyl	92	45	117
2,4,6-Tribromophenol	83	11	158
Terphenyl-d14	107	50	124

Compounds:	Concentration mg/kg (ppm)
Benz(a)anthracene	<0.01
Chrysene	<0.01
Benzo(a)pyrene	<0.01
Benzo(b)fluoranthene	<0.01
Benzo(k)fluoranthene	<0.01
Indeno(1,2,3-cd)pyrene	<0.01
Dibenz(a,h)anthracene	<0.01

Provided to Builders Exchange of WA, Inc. For usage Conditions Agreement see www.bxwa.com - Always Verify Scal

Date of Report: 12/09/22
Date Received: 12/06/22
Project: Sebranke Remedial Action M1030.02.006, F&BI 212084

QUALITY ASSURANCE RESULTS FROM THE ANALYSIS OF SOIL SAMPLES FOR TOTAL PETROLEUM HYDROCARBONS AS DIESEL EXTENDED USING METHOD NWTPH-Dx

Laboratory Code: 212084-02 (Matrix Spike)

Analyte	Reporting Units	Spike Level	(Wet wt) Sample Result	Percent Recovery MS	Percent Recovery MSD	Acceptance Criteria	RPD (Limit 20)
Diesel Extended	mg/kg (ppm)	2,000	270	76	76	70-130	0

Laboratory Code: Laboratory Control Sample

Analyte	Reporting Units	Spike Level	Percent Recovery LCS	Acceptance Criteria
Diesel Extended	mg/kg (ppm)	2,000	90	70-130

Provided to Builders Exchange of WA, Inc. For usage Conditions Agreement see www.bxwa.com - Always Verify Scal

Date of Report: 12/09/22
Date Received: 12/06/22
Project: Sebranke Remedial Action M1030.02.006, F&BI 212084

QUALITY ASSURANCE RESULTS FOR THE ANALYSIS OF SOIL SAMPLES FOR TOTAL METALS USING EPA METHOD 6020B

Laboratory Code: 212084-02 (Matrix Spike)

Analyte	Reporting Units	Spike Level	Sample Result (Wet wt)	Percent Recovery MS	Percent Recovery MSD	Acceptance Criteria	RPD (Limit 20)
Arsenic	mg/kg (ppm)	10	3.35	76	78	75-125	3
Cadmium	mg/kg (ppm)	10	<1	103	102	75-125	1
Lead	mg/kg (ppm)	50	99.9	57 b	32 b	75-125	56 b

Laboratory Code: 212084-02 x5 (Matrix Spike)

Analyte	Reporting Units	Spike Level	Sample Result (Wet wt)	Percent Recovery MS	Percent Recovery MSD	Acceptance Criteria	RPD (Limit 20)
Arsenic	mg/kg (ppm)	10	<5	72 vo	83	75-125	14
Cadmium	mg/kg (ppm)	10	<5	93	100	75-125	7
Lead	mg/kg (ppm)	50	110	36 b	35 b	75-125	3

Laboratory Code: Laboratory Control Sample

Analyte	Reporting Units	Spike Level	Percent Recovery LCS	Acceptance Criteria
Arsenic	mg/kg (ppm)	10	82	80-120
Cadmium	mg/kg (ppm)	10	97	80-120
Lead	mg/kg (ppm)	50	93	80-120

Provided to Builders Exchange of WA, Inc. For usage Conditions Agreement see www.bxwa.com - Always Verify Scal

Date of Report: 12/09/22
Date Received: 12/06/22
Project: Sebranke Remedial Action M1030.02.006, F&BI 212084

QUALITY ASSURANCE RESULTS FOR THE ANALYSIS OF SOIL SAMPLES FOR SEMIVOLATILES BY EPA METHOD 8270E

Laboratory Code: 212082-02 1/5 (Matrix Spike)

Analyte	Reporting Units	Spike Level	Sample Result (Wet wt)	Percent Recovery MS	Percent Recovery MSD	Acceptance Criteria	RPD (Limit 20)
Benz(a)anthracene	mg/kg (ppm)	0.83	<0.01	77	86	50-150	11
Chrysene	mg/kg (ppm)	0.83	<0.01	75	91	50-150	19
Benzo(a)pyrene	mg/kg (ppm)	0.83	<0.01	75	87	50-150	15
Benzo(b)fluoranthene	mg/kg (ppm)	0.83	0.010	79	84	50-150	6
Benzo(k)fluoranthene	mg/kg (ppm)	0.83	<0.01	80	87	50-150	8
Indeno(1,2,3-cd)pyrene	mg/kg (ppm)	0.83	<0.01	58	89	41-134	42 vo
Dibenz(a,h)anthracene	mg/kg (ppm)	0.83	<0.01	64	92	44-130	36 vo

Laboratory Code: Laboratory Control Sample 1/5

Analyte	Reporting Units	Spike Level	Percent Recovery LCS	Acceptance Criteria
Benz(a)anthracene	mg/kg (ppm)	0.83	90	70-130
Chrysene	mg/kg (ppm)	0.83	95	70-130
Benzo(a)pyrene	mg/kg (ppm)	0.83	90	68-120
Benzo(b)fluoranthene	mg/kg (ppm)	0.83	88	69-125
Benzo(k)fluoranthene	mg/kg (ppm)	0.83	90	70-130
Indeno(1,2,3-cd)pyrene	mg/kg (ppm)	0.83	91	67-129
Dibenz(a,h)anthracene	mg/kg (ppm)	0.83	91	67-128

Provided to Builders Exchange of WA, Inc. For usage Conditions Agreement see www.bxwa.com - Always Verify Scal

Data Qualifiers & Definitions

a - The analyte was detected at a level less than five times the reporting limit. The RPD results may not provide reliable information on the variability of the analysis.

b - The analyte was spiked at a level that was less than five times that present in the sample. Matrix spike recoveries may not be meaningful.

ca - The calibration results for the analyte were outside of acceptance criteria. The value reported is an estimate.

c - The presence of the analyte may be due to carryover from previous sample injections.

cf - The sample was centrifuged prior to analysis.

d - The sample was diluted. Detection limits were raised and surrogate recoveries may not be meaningful.

dv - Insufficient sample volume was available to achieve normal reporting limits.

f - The sample was laboratory filtered prior to analysis.

fb - The analyte was detected in the method blank.

fc - The analyte is a common laboratory and field contaminant.

hr - The sample and duplicate were reextracted and reanalyzed. RPD results were still outside of control limits. Variability is attributed to sample inhomogeneity.

hs - Headspace was present in the container used for analysis.

ht – The analysis was performed outside the method or client-specified holding time requirement.

ip - Recovery fell outside of control limits due to sample matrix effects.

j - The analyte concentration is reported below the lowest calibration standard. The value reported is an estimate.

J - The internal standard associated with the analyte is out of control limits. The reported concentration is an estimate.

jl - The laboratory control sample(s) percent recovery and/or RPD were out of control limits. The reported concentration should be considered an estimate.

js - The surrogate associated with the analyte is out of control limits. The reported concentration should be considered an estimate.

lc - The presence of the analyte is likely due to laboratory contamination.

L - The reported concentration was generated from a library search.

nm - The analyte was not detected in one or more of the duplicate analyses. Therefore, calculation of the RPD is not applicable.

pc - The sample was received with incorrect preservation or in a container not approved by the method. The value reported should be considered an estimate.

ve - The analyte response exceeded the valid instrument calibration range. The value reported is an estimate.

vo - The value reported fell outside the control limits established for this analyte.

x - The sample chromatographic pattern does not resemble the fuel standard used for quantitation.

Provided to Builders Exchange of WA, Inc. For usage Conditions Agreement see www.bxwa.com - Always Verify Scal

212084

SAMPLE CHAIN OF CUSTODY

12/06/22

Page # 1 of G2

Report To Carolyn Wise
Company Maul Foster & Alongi
Address 1329 N State St., #401
City, State, ZIP Bellingham, WA 98225
Phone (360) 690-9282 Email CWise@maulfoster.com

SAMPLERS (signature)

PROJECT NAME: Sebianka Remedial Action
PO #: M1030.02.006

REMARKS
Project specific RLs? - Yes / No

INVOICE TO: accounting@maulfoster.com

TURNAROUND TIME
☐ Standard turnaround
☒ RUSH 24 hr
Rush charges authorized by:

SAMPLE DISPOSAL
☒ Archive samples only 01-SS-6.0
☐ Other
Default: Dispose after 30 days

Sample ID	Lab ID	Date Sampled	Time Sampled	Sample Type	# of Jars	NWTPH-Dx	NWTPH-Gx	BTEX EPA 8021	NWTPH-HCID	VOCs EPA 8260	carcinogenic PAHs EPA 8270	PCBs EPA 8082	As, Pb, Cd by EPA 6020A				Notes
																	cPAHs per CW 12/8/22 MC
01-SS-6.0*	01 A-C	12/6/2022	910	S	3	X				ESL	X						* Please archive 01-SS-6.0
ESW01-SS-1.0	02		1350		1	X					X		X				
SSW01-SS-1.0	03		1355		1	X					X		X				
SSW02-SS-1.0	04		1400		1	X					X		X				
WSW01-SS-1.0	05		1405		1	X					X		X				
BASE01-SS-1.0	06 A-B	↓	1410	↓	2	X					X		X				

SIGNATURE	PRINT NAME	COMPANY	DATE	TIME
Relinquished by:	Evelyn Lindeen	MFA	12/06/22	1700
Received by:	Eric Baur	F-B	12/6/22	1700
Relinquished by:				
Received by:		Samples received at 4 °C		

Friedman & Bruya, Inc.
Ph. (206) 285-8282

NP

Provided to Builders Exchange of WA, Inc. For usage Conditions Agreement see www.bxwa.com - Always Verify Scal

FRIEDMAN & BRUYA, INC.

ENVIRONMENTAL CHEMISTS

James E. Bruya, Ph.D.
Yelena Aravkina, M.S.
Michael Erdahl, B.S.
Vineta Mills, M.S.
Eric Young, B.S.

5500 4th Avenue South
Seattle, WA 98108
(206) 285-8282
fbi@isomedia.com
www.friedmanandbruya.com

December 15, 2022

Carolyn Wise, Project Manager
Maul Foster Alongi
1329 N State St, Suite 301
Bellingham, WA 98225

Dear Ms Wise:

Included are the results from the testing of material submitted on December 13, 2022 from the Sebranke Remedial Action M1030.02.006, F&BI 212214 project. There are 14 pages included in this report. Any samples that may remain are currently scheduled for disposal in 30 days, or as directed by the Chain of Custody document. If you would like us to return your samples or arrange for long term storage at our offices, please contact us as soon as possible.

We appreciate this opportunity to be of service to you and hope you will call if you should have any questions.

Sincerely,

FRIEDMAN & BRUYA, INC.

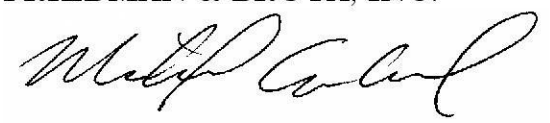

Michael Erdahl
Project Manager

Enclosures
c: Eveleyn LundeenMFA1215R.DOC

Provided to Builders Exchange of WA, Inc. For usage Conditions Agreement see www.bxwa.com - Always Verify Scal

FRIEDMAN & BRUYA, INC.

ENVIRONMENTAL CHEMISTS

CASE NARRATIVE

This case narrative encompasses samples received on December 13, 2022 by Friedman & Bruya, Inc. from the Maul Foster Alongi Sebranke Remedial Action M1030.02.006, F&BI 212214 project. Samples were logged in under the laboratory ID's listed below.

Laboratory ID	Maul Foster Alongi
212214 -01	NSW02-SS-1.0
212214 -02	WSW03-SS-1.0

All quality control requirements were acceptable.

Provided to Builders Exchange of WA, Inc. For usage Conditions Agreement see www.bxwa.com - Always Verify Scal

Date of Report: 12/15/22
Date Received: 12/13/22
Project: Sebranke Remedial Action M1030.02.006, F&BI 212214
Date Extracted: 12/14/22
Date Analyzed: 12/14/22

RESULTS FROM THE ANALYSIS OF THE SOIL SAMPLES FOR PERCENT MOISTURE USING ASTM D2216-98

Sample ID Laboratory ID	% Moisture
NSW02-SS-1.0 212214-01	6
WSW03-SS-1.0 212214-02	6

Provided to Builders Exchange of WA, Inc. For usage Conditions Agreement see www.bxwa.com - Always Verify Scal

Date of Report: 12/15/22
Date Received: 12/13/22
Project: Sebranke Remedial Action M1030.02.006, F&BI 212214
Date Extracted: 12/14/22
Date Analyzed: 12/14/22

RESULTS FROM THE ANALYSIS OF SOIL SAMPLES FOR TOTAL PETROLEUM HYDROCARBONS AS DIESEL AND MOTOR OIL USING METHOD NWTPH-Dx

Results Reported on a Dry Weight Basis
Results Reported as mg/kg (ppm)

Sample ID Laboratory ID	Diesel Range (C_{10}-C_{25})	Motor Oil Range (C_{25}-C_{36})	Surrogate (% Recovery) (Limit 50-150)
NSW02-SS-1.0 212214-01	<100	<250	100
WSW03-SS-1.0 212214-02	<100	<250	98
vMethod Blank 02-3000 MB	<100	<250	97

Provided to Builders Exchange of WA, Inc. For usage Conditions Agreement see www.bxwa.com - Always Verify Scal

Analysis For Total Metals By EPA Method 6020B

Client ID:	NSW02-SS-1.0	Client:	Maul Foster Alongi
Date Received:	12/13/22	Project:	Sebranke Remedial Action, F&BI 212214
Date Extracted:	12/14/22	Lab ID:	212214-01
Date Analyzed:	12/14/22	Data File:	212214-01.040
Matrix:	Soil	Instrument:	ICPMS2
Units:	mg/kg (ppm) Dry Weight	Operator:	SP

Analyte:	Concentration mg/kg (ppm)
Arsenic	2.17
Cadmium	<1
Lead	14.1

Provided to Builders Exchange of WA, Inc. For usage Conditions Agreement see www.bxwa.com - Always Verify Scal

Analysis For Total Metals By EPA Method 6020B

Client ID:	WSW03-SS-1.0	Client:	Maul Foster Alongi
Date Received:	12/13/22	Project:	Sebranke Remedial Action, F&BI 212214
Date Extracted:	12/14/22	Lab ID:	212214-02
Date Analyzed:	12/14/22	Data File:	212214-02.041
Matrix:	Soil	Instrument:	ICPMS2
Units:	mg/kg (ppm) Dry Weight	Operator:	SP

Analyte:	Concentration mg/kg (ppm)
Arsenic	2.43
Cadmium	<1

Provided to Builders Exchange of WA, Inc. For usage Conditions Agreement see www.bxwa.com - Always Verify Scal

Analysis For Total Metals By EPA Method 6020B

Client ID:	WSW03-SS-1.0	Client:	Maul Foster Alongi
Date Received:	12/13/22	Project:	Sebranke Remedial Action, F&BI 212214
Date Extracted:	12/14/22	Lab ID:	212214-02 x25
Date Analyzed:	12/14/22	Data File:	212214-02 x25.044
Matrix:	Soil	Instrument:	ICPMS2
Units:	mg/kg (ppm) Dry Weight	Operator:	SP

Analyte:	Concentration mg/kg (ppm)
Lead	363

Provided to Builders Exchange of WA, Inc. For usage Conditions Agreement see www.bxwa.com - Always Verify Scal

Analysis For Total Metals By EPA Method 6020B

Client ID:	Method Blank	Client:	Maul Foster Alongi
Date Received:	NA	Project:	Sebranke Remedial Action, F&BI 212214
Date Extracted:	12/14/22	Lab ID:	I2-897 mb2
Date Analyzed:	12/14/22	Data File:	I2-897 mb2.039
Matrix:	Soil	Instrument:	ICPMS2
Units:	mg/kg (ppm) Dry Weight	Operator:	SP

Analyte:	Concentration mg/kg (ppm)
Arsenic	<1
Cadmium	<1
Lead	<1

Provided to Builders Exchange of WA, Inc. For usage Conditions Agreement see www.bxwa.com - Always Verify Scal

Analysis For Semivolatile Compounds By EPA Method 8270E

Client Sample ID:	NSW02-SS-1.0	Client:	Maul Foster Alongi
Date Received:	12/13/22	Project:	Sebranke Remedial Action, F&BI 212214
Date Extracted:	12/13/22	Lab ID:	212214-01 1/5
Date Analyzed:	12/14/22	Data File:	121406.D
Matrix:	Soil	Instrument:	GCMS12
Units:	mg/kg (ppm) Dry Weight	Operator:	JCM

Surrogates:	% Recovery:	Lower Limit:	Upper Limit:
Terphenyl-d14	88	50	124

Compounds:	Concentration mg/kg (ppm)
Benz(a)anthracene	<0.01
Chrysene	<0.01
Benzo(a)pyrene	<0.01
Benzo(b)fluoranthene	<0.01
Benzo(k)fluoranthene	<0.01
Indeno(1,2,3-cd)pyrene	<0.01
Dibenz(a,h)anthracene	<0.01

Provided to Builders Exchange of WA, Inc. For usage Conditions Agreement see www.bxwa.com - Always Verify Scal

Analysis For Semivolatile Compounds By EPA Method 8270E

Client Sample ID:	WSW03-SS-1.0	Client:	Maul Foster Alongi
Date Received:	12/13/22	Project:	Sebranke Remedial Action, F&BI 212214
Date Extracted:	12/13/22	Lab ID:	212214-02 1/5
Date Analyzed:	12/14/22	Data File:	121407.D
Matrix:	Soil	Instrument:	GCMS12
Units:	mg/kg (ppm) Dry Weight	Operator:	JCM

Surrogates:	% Recovery:	Lower Limit:	Upper Limit:
Terphenyl-d14	92	50	124

Compounds:	Concentration mg/kg (ppm)
Benz(a)anthracene	<0.01
Chrysene	<0.01
Benzo(a)pyrene	<0.01
Benzo(b)fluoranthene	<0.01
Benzo(k)fluoranthene	<0.01
Indeno(1,2,3-cd)pyrene	<0.01
Dibenz(a,h)anthracene	<0.01

Provided to Builders Exchange of WA, Inc. For usage Conditions Agreement see www.bxwa.com - Always Verify Scal

Analysis For Semivolatile Compounds By EPA Method 8270E

Client Sample ID:	Method Blank	Client:	Maul Foster Alongi
Date Received:	Not Applicable	Project:	Sebranke Remedial Action, F&BI 212214
Date Extracted:	12/13/22	Lab ID:	02-2996 mb 1/5
Date Analyzed:	12/14/22	Data File:	121324.D
Matrix:	Soil	Instrument:	GCMS12
Units:	mg/kg (ppm) Dry Weight	Operator:	JCM

Surrogates:	% Recovery:	Lower Limit:	Upper Limit:
Terphenyl-d14	100	50	124

Compounds:	Concentration mg/kg (ppm)
Benz(a)anthracene	<0.01
Chrysene	<0.01
Benzo(a)pyrene	<0.01
Benzo(b)fluoranthene	<0.01
Benzo(k)fluoranthene	<0.01
Indeno(1,2,3-cd)pyrene	<0.01
Dibenz(a,h)anthracene	<0.01

Provided to Builders Exchange of WA, Inc. For usage Conditions Agreement see www.bxwa.com - Always Verify Scal

Date of Report: 12/15/22
Date Received: 12/13/22
Project: Sebranke Remedial Action M1030.02.006, F&BI 212214

QUALITY ASSURANCE RESULTS FROM THE ANALYSIS OF SOIL SAMPLES FOR TOTAL PETROLEUM HYDROCARBONS AS DIESEL EXTENDED USING METHOD NWTPH-Dx

Laboratory Code: 212016-01 (Matrix Spike)

Analyte	Reporting Units	Spike Level	(Wet wt) Sample Result	Percent Recovery MS	Percent Recovery MSD	Acceptance Criteria	RPD (Limit 20)
Diesel Extended	mg/kg (ppm)	2,000	32,000	50 b	250 b	70-130	133 b

Laboratory Code: Laboratory Control Sample

Analyte	Reporting Units	Spike Level	Percent Recovery LCS	Acceptance Criteria
Diesel Extended	mg/kg (ppm)	2,000	96	70-130

Provided to Builders Exchange of WA, Inc. For usage Conditions Agreement see www.bxwa.com - Always Verify Scal

Date of Report: 12/15/22
Date Received: 12/13/22
Project: Sebranke Remedial Action M1030.02.006, F&BI 212214

QUALITY ASSURANCE RESULTS FOR THE ANALYSIS OF SOIL SAMPLES FOR TOTAL METALS USING EPA METHOD 6020B

Laboratory Code: 212069-01 x5 (Matrix Spike)

Analyte	Reporting Units	Spike Level	Sample Result (Wet wt)	Percent Recovery MS	Percent Recovery MSD	Acceptance Criteria	RPD (Limit 20)
Arsenic	mg/kg (ppm)	10	<5	103	94	75-125	9
Cadmium	mg/kg (ppm)	10	<5	109	99	75-125	10
Lead	mg/kg (ppm)	50	38.1	58 b	57 b	75-125	2

Laboratory Code: Laboratory Control Sample

Analyte	Reporting Units	Spike Level	Percent Recovery LCS	Acceptance Criteria
Arsenic	mg/kg (ppm)	10	102	80-120
Cadmium	mg/kg (ppm)	10	102	80-120
Lead	mg/kg (ppm)	50	107	80-120

Provided to Builders Exchange of WA, Inc. For usage Conditions Agreement see www.bxwa.com - Always Verify Scal

Date of Report: 12/15/22
Date Received: 12/13/22
Project: Sebranke Remedial Action M1030.02.006, F&BI 212214

QUALITY ASSURANCE RESULTS FOR THE ANALYSIS OF SOIL SAMPLES FOR SEMIVOLATILES BY EPA METHOD 8270E

Laboratory Code: 212133-02 1/5 (Matrix Spike)

Analyte	Reporting Units	Spike Level	Sample Result (Wet wt)	Percent Recovery MS	Percent Recovery MSD	Acceptance Criteria	RPD (Limit 20)
Benz(a)anthracene	mg/kg (ppm)	0.83	<0.01	92	86	37-146	7
Chrysene	mg/kg (ppm)	0.83	<0.01	91	87	36-144	4
Benzo(a)pyrene	mg/kg (ppm)	0.83	<0.01	93	88	40-150	6
Benzo(b)fluoranthene	mg/kg (ppm)	0.83	<0.01	93	86	45-157	8
Benzo(k)fluoranthene	mg/kg (ppm)	0.83	<0.01	92	89	50-150	3
Indeno(1,2,3-cd)pyrene	mg/kg (ppm)	0.83	<0.01	102	107	24-145	5
Dibenz(a,h)anthracene	mg/kg (ppm)	0.83	<0.01	100	103	31-137	3

Laboratory Code: Laboratory Control Sample 1/5

Analyte	Reporting Units	Spike Level	Percent Recovery LCS	Acceptance Criteria
Benz(a)anthracene	mg/kg (ppm)	0.83	91	64-116
Chrysene	mg/kg (ppm)	0.83	92	66-119
Benzo(a)pyrene	mg/kg (ppm)	0.83	94	62-116
Benzo(b)fluoranthene	mg/kg (ppm)	0.83	94	61-118
Benzo(k)fluoranthene	mg/kg (ppm)	0.83	94	65-119
Indeno(1,2,3-cd)pyrene	mg/kg (ppm)	0.83	107	64-130
Dibenz(a,h)anthracene	mg/kg (ppm)	0.83	104	67-131

Provided to Builders Exchange of WA, Inc. For usage Conditions Agreement see www.bxwa.com - Always Verify Scal

Data Qualifiers & Definitions

a - The analyte was detected at a level less than five times the reporting limit. The RPD results may not provide reliable information on the variability of the analysis.

b - The analyte was spiked at a level that was less than five times that present in the sample. Matrix spike recoveries may not be meaningful.

ca - The calibration results for the analyte were outside of acceptance criteria. The value reported is an estimate.

c - The presence of the analyte may be due to carryover from previous sample injections.

cf - The sample was centrifuged prior to analysis.

d - The sample was diluted. Detection limits were raised and surrogate recoveries may not be meaningful.

dv - Insufficient sample volume was available to achieve normal reporting limits.

f - The sample was laboratory filtered prior to analysis.

fb - The analyte was detected in the method blank.

fc - The analyte is a common laboratory and field contaminant.

hr - The sample and duplicate were reextracted and reanalyzed. RPD results were still outside of control limits. Variability is attributed to sample inhomogeneity.

hs - Headspace was present in the container used for analysis.

ht – The analysis was performed outside the method or client-specified holding time requirement.

ip - Recovery fell outside of control limits due to sample matrix effects.

j - The analyte concentration is reported below the lowest calibration standard. The value reported is an estimate.

J - The internal standard associated with the analyte is out of control limits. The reported concentration is an estimate.

jl - The laboratory control sample(s) percent recovery and/or RPD were out of control limits. The reported concentration should be considered an estimate.

js - The surrogate associated with the analyte is out of control limits. The reported concentration should be considered an estimate.

lc - The presence of the analyte is likely due to laboratory contamination.

L - The reported concentration was generated from a library search.

nm - The analyte was not detected in one or more of the duplicate analyses. Therefore, calculation of the RPD is not applicable.

pc - The sample was received with incorrect preservation or in a container not approved by the method. The value reported should be considered an estimate.

ve - The analyte response exceeded the valid instrument calibration range. The value reported is an estimate.

vo - The value reported fell outside the control limits established for this analyte.

x - The sample chromatographic pattern does not resemble the fuel standard used for quantitation.

Provided to Builders Exchange of WA, Inc. For usage Conditions Agreement see www.bxwa.com - Always Verify Scal

212214

SAMPLE CHAIN OF CUSTODY

12/13/22

G1

Page # 1 of 1

Report To Carolyn Wise

Company Maul Foster & Alongi

Address 1329 N State St., #301

City, State, ZIP Bellingham, WA 98225

Phone (360) 610-5822 Email cwise@maulfoster.com

SAMPLERS (*signature*)

PROJECT NAME: Sebranke Remedial Action

PO #: M1030.02.000

REMARKS

Project specific RLs? - Yes / No

INVOICE TO: accounting@maulfoster

TURNAROUND TIME

☐ Standard turnaround

☒ RUSH 24 hr

Rush charges authorized by:

SAMPLE DISPOSAL

☐ Archive samples

☐ Other

Default: Dispose after 30 days

Sample ID	Lab ID	Date Sampled	Time Sampled	Sample Type	# of Jars	NWTPH-Dx	NWTPH-Gx	BTEX EPA 8021	NWTPH-HCID	VOCs EPA 8260	cPAHs only PAHs EPA 8270	PCBs EPA 8082	As, Cd, Pb by 6020A				Notes
NSWC2-SS-1.0	01	12/13/22	1140	S	1	X					X		X				cPAHs only
WSWC3-SS-1.0	02A-B	↓	1150	S	2	X					X		X				for each
																	both samples

SIGNATURE	PRINT NAME	COMPANY	DATE	TIME
Relinquished by:	Evelyn Lundeen	MFA	12/13/22	1523
Received by:	ANH PHAN	FSB	12/13/22	15:23
Relinquished by:				
Received by:		Samples received at 0 °C		

Friedman & Bruya, Inc.
3012 16th Avenue West
Seattle, WA 98119-2029
Ph. (206) 285-8282

Provided to Builders Exchange of WA, Inc. For usage Conditions Agreement see www.bxwa.com - Always Verify Scal

FRIEDMAN & BRUYA, INC.

ENVIRONMENTAL CHEMISTS

James E. Bruya, Ph.D.
Yelena Aravkina, M.S.
Michael Erdahl, B.S.
Vineta Mills, M.S.
Eric Young, B.S.

5500 4th Avenue South
Seattle, WA 98108
(206) 285-8282
fbi@isomedia.com
www.friedmanandbruya.com

December 15, 2022

Carolyn Wise, Project Manager
Maul Foster Alongi
1329 N State St, Suite 301
Bellingham, WA 98225

Dear Ms Wise:

Included are the results from the testing of material submitted on December 8, 2022 from the Sebranke Remedial Action M1030-02.006, F&BI 212145 project. There are 39 pages included in this report. Any samples that may remain are currently scheduled for disposal in 30 days, or as directed by the Chain of Custody document. If you would like us to return your samples or arrange for long term storage at our offices, please contact us as soon as possible.

We appreciate this opportunity to be of service to you and hope you will call if you should have any questions.

Sincerely,

FRIEDMAN & BRUYA, INC.

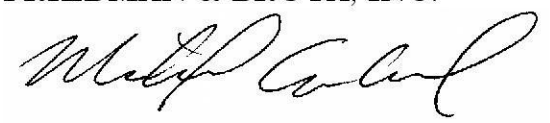

Michael Erdahl
Project Manager

Enclosures
c: Evelyn Lundeen
MFA1215R.DOC

Provided to Builders Exchange of WA, Inc. For usage Conditions Agreement see www.bxwa.com - Always Verify Scal

FRIEDMAN & BRUYA, INC.

ENVIRONMENTAL CHEMISTS

CASE NARRATIVE

This case narrative encompasses samples received on December 8, 2022 by Friedman & Bruya, Inc. from the Maul Foster Alongi Sebranke Remedial Action M1030-02.006, F&BI 212145 project. Samples were logged in under the laboratory ID's listed below.

Laboratory ID	Maul Foster Alongi
212145 -01	NSW01-SS-1.0
212145 -02	WSW02-SS-1.0
212145 -03	ESW02-SS-1.0
212145 -04	BASE02-SS-2.0
212145 -05	BASE03-SS-2.0
212145 -06	BASE04-SS-2.0
212145 -07	DUP-SS-1.0
212145 -08	TSN-SS-6.0
212145 -09	TSS-SS-6.0
212145 -10	TSW-SS-6.0

The 8270E matrix spike and matrix spike duplicate did not meet the relative percent difference for dibenz(a,h)anthracene. The laboratory control sample passed the acceptance criteria, therefore the results were due to sample matrix effect.

All other quality control requirements were acceptable.

Provided to Builders Exchange of WA, Inc. For usage Conditions Agreement see www.bxwa.com - Always Verify Scal

Date of Report: 12/15/22
Date Received: 12/08/22
Project: Sebranke Remedial Action M1030-02.006, F&BI 212145
Date Extracted: NA
Date Analyzed: 12/09/22

RESULTS FROM THE ANALYSIS OF THE SOIL SAMPLES FOR PERCENT MOISTURE USING ASTM D2216-98

Sample ID Laboratory ID	% Moisture
NSW01-SS-1.0 212145-01	32
WSW02-SS-1.0 212145-02	17
ESW02-SS-1.0 212145-03	13
BASE02-SS-2.0 212145-04	41
BASE03-SS-2.0 212145-05	24
BASE04-SS-2.0 212145-06	40
DUP-SS-1.0 212145-07	13
TSN-SS-6.0 212145-08	50
TSS-SS-6.0 212145-09	70
TSW-SS-6.0 212145-10	55

Provided to Builders Exchange of WA, Inc. For usage Conditions Agreement see www.bxwa.com - Always Verify Scal

BXWA

Date of Report: 12/15/22
Date Received: 12/08/22
Project: Sebranke Remedial Action M1030-02.006, F&BI 212145
Date Extracted: 12/09/22
Date Analyzed: 12/09/22

RESULTS FROM THE ANALYSIS OF SOIL SAMPLES FOR GASOLINE, DIESEL AND HEAVY OIL BY NWTPH-HCID

Results Reported on a Dry Weight Basis
Results Reported as Not Detected (ND) or Detected (D)

THE DATA PROVIDED BELOW WAS PERFORMED PER THE GUIDELINES ESTABLISHED BY THE WASHINGTON DEPARTMENT OF ECOLOGY AND WERE NOT DESIGNED TO PROVIDE INFORMATION WITH REGARDS TO THE ACTUAL IDENTIFICATION OF ANY MATERIAL PRESENT

Sample ID Laboratory ID	Gasoline	Diesel	Heavy Oil	Surrogate (% Recovery) (Limit 50-150)
TSN-SS-6.0 212145-08	ND	D	D	104
TSS-SS-6.0 212145-09	ND	D	D	105
TSW-SS-6.0 212145-10	ND	ND	ND	106
Method Blank 02-2912 MB2	ND	ND	ND	99

ND - Material not detected at or above 20 mg/kg gas, 50 mg/kg diesel and 250 mg/kg heavy oil.

Provided to Builders Exchange of WA, Inc. For usage Conditions Agreement see www.bxwa.com - Always Verify Scal

Date of Report: 12/15/22
Date Received: 12/08/22
Project: Sebranke Remedial Action M1030-02.006, F&BI 212145
Date Extracted: 12/09/22
Date Analyzed: 12/09/22

RESULTS FROM THE ANALYSIS OF SOIL SAMPLES FOR BENZENE, TOLUENE, ETHYLBENZENE, AND XYLENES USING EPA METHOD 8021B

Results Reported on a Dry Weight Basis
Results Reported as mg/kg (ppm)

Sample ID Laboratory ID	Benzene	Toluene	Ethyl Benzene	Total Xylenes	Surrogate (% Recovery) (Limit 50-132)
TSW-SS-6.0 212145-10	<0.02	<0.02	<0.02	<0.06	82
Method Blank 02-2922 MB	<0.02	<0.02	<0.02	<0.06	91

Provided to Builders Exchange of WA, Inc. For usage Conditions Agreement see www.bxwa.com - Always Verify Scal

Date of Report: 12/15/22
Date Received: 12/08/22
Project: Sebranke Remedial Action M1030-02.006, F&BI 212145
Date Extracted: 12/09/22
Date Analyzed: 12/09/22

RESULTS FROM THE ANALYSIS OF SOIL SAMPLES FOR BENZENE, TOLUENE, ETHYLBENZENE, AND XYLENES USING EPA METHOD 8021B

Results Reported on a Dry Weight Basis
Results Reported as mg/kg (ppm)

Sample ID Laboratory ID	Benzene	Surrogate (% Recovery) (Limit 50-132)
TSN-SS-6.0 212145-08	<0.02	94
TSS-SS-6.0 212145-09	0.17	91
Method Blank 02-2922 MB	<0.02	91

Provided to Builders Exchange of WA, Inc. For usage Conditions Agreement see www.bxwa.com - Always Verify Scal

Date of Report: 12/15/22
Date Received: 12/08/22
Project: Sebranke Remedial Action M1030-02.006, F&BI 212145
Date Extracted: 12/08/22 and 12/13/22
Date Analyzed: 12/08/22 and 12/13/22

RESULTS FROM THE ANALYSIS OF SOIL SAMPLES FOR TOTAL PETROLEUM HYDROCARBONS AS DIESEL AND MOTOR OIL USING METHOD NWTPH-Dx

Results Reported on a Dry Weight Basis
Results Reported as mg/kg (ppm)

Sample ID Laboratory ID	Diesel Range (C_{10}-C_{25})	Motor Oil Range (C_{25}-C_{36})	Surrogate (% Recovery) (Limit 50-150)
NSW01-SS-1.0 212145-01	540 x	2,100	114
WSW02-SS-1.0 212145-02	91 x	390	104
ESW02-SS-1.0 212145-03	78 x	420	111
BASE02-SS-2.0 212145-04	<50	<250	102
BASE03-SS-2.0 212145-05	<50	<250	117
BASE04-SS-2.0 212145-06	1,100 x	4,400	115
DUP-SS-1.0 212145-07	86 x	460	114
TSS-SS-6.0 212145-09	1,300	2,300	116
TSW-SS-6.0 212145-10 1/2	<100	<500	113
Method Blank 02-2919 MB	<50	<250	108
Method Blank 02-2944 MB2	<50	<250	111

Provided to Builders Exchange of WA, Inc. For usage Conditions Agreement see www.bxwa.com - Always Verify Scal

Analysis For Total Metals By EPA Method 6020B

Client ID:	NSW01-SS-1.0	Client:	Maul Foster Alongi
Date Received:	12/08/22	Project:	Sebranke Remedial Action, F&BI 212145
Date Extracted:	12/08/22	Lab ID:	212145-01
Date Analyzed:	12/08/22	Data File:	212145-01.171
Matrix:	Soil	Instrument:	ICPMS2
Units:	mg/kg (ppm) Dry Weight	Operator:	SP

Analyte:	Concentration mg/kg (ppm)
Arsenic	8.51
Cadmium	2.44

Provided to Builders Exchange of WA, Inc. For usage Conditions Agreement see www.bxwa.com - Always Verify Scal

Analysis For Total Metals By EPA Method 6020B

Client ID:	NSW01-SS-1.0	Client:	Maul Foster Alongi
Date Received:	12/08/22	Project:	Sebranke Remedial Action, F&BI 212145
Date Extracted:	12/08/22	Lab ID:	212145-01 x10
Date Analyzed:	12/09/22	Data File:	212145-01 x10.044
Matrix:	Soil	Instrument:	ICPMS2
Units:	mg/kg (ppm) Dry Weight	Operator:	SP

Analyte:	Concentration mg/kg (ppm)
Lead	523

Provided to Builders Exchange of WA, Inc. For usage Conditions Agreement see www.bxwa.com - Always Verify Scal

Analysis For Total Metals By EPA Method 6020B

Client ID:	WSW02-SS-1.0	Client:	Maul Foster Alongi
Date Received:	12/08/22	Project:	Sebranke Remedial Action, F&BI 212145
Date Extracted:	12/08/22	Lab ID:	212145-02
Date Analyzed:	12/08/22	Data File:	212145-02.172
Matrix:	Soil	Instrument:	ICPMS2
Units:	mg/kg (ppm) Dry Weight	Operator:	SP

Analyte:	Concentration mg/kg (ppm)
Arsenic	5.62
Cadmium	<1

Provided to Builders Exchange of WA, Inc. For usage Conditions Agreement see www.bxwa.com - Always Verify Scal

Analysis For Total Metals By EPA Method 6020B

Client ID:	WSW02-SS-1.0	Client:	Maul Foster Alongi
Date Received:	12/08/22	Project:	Sebranke Remedial Action, F&BI 212145
Date Extracted:	12/08/22	Lab ID:	212145-02 x10
Date Analyzed:	12/09/22	Data File:	212145-02 x10.052
Matrix:	Soil	Instrument:	ICPMS2
Units:	mg/kg (ppm) Dry Weight	Operator:	SP

Analyte:	Concentration mg/kg (ppm)
Lead	199

Provided to Builders Exchange of WA, Inc. For usage Conditions Agreement see www.bxwa.com - Always Verify Scal

Analysis For Total Metals By EPA Method 6020B

Client ID:	ESW02-SS-1.0	Client:	Maul Foster Alongi
Date Received:	12/08/22	Project:	Sebranke Remedial Action, F&BI 212145
Date Extracted:	12/08/22	Lab ID:	212145-03
Date Analyzed:	12/08/22	Data File:	212145-03.173
Matrix:	Soil	Instrument:	ICPMS2
Units:	mg/kg (ppm) Dry Weight	Operator:	SP

Analyte:	Concentration mg/kg (ppm)
Arsenic	11.2
Cadmium	2.33

Provided to Builders Exchange of WA, Inc. For usage Conditions Agreement see www.bxwa.com - Always Verify Scal

Analysis For Total Metals By EPA Method 6020B

Client ID:	ESW02-SS-1.0	Client:	Maul Foster Alongi
Date Received:	12/08/22	Project:	Sebranke Remedial Action, F&BI 212145
Date Extracted:	12/08/22	Lab ID:	212145-03 x25
Date Analyzed:	12/09/22	Data File:	212145-03 x25.053
Matrix:	Soil	Instrument:	ICPMS2
Units:	mg/kg (ppm) Dry Weight	Operator:	SP

Analyte:	Concentration mg/kg (ppm)
Lead	937

Provided to Builders Exchange of WA, Inc. For usage Conditions Agreement see www.bxwa.com - Always Verify Scal

Analysis For Total Metals By EPA Method 6020B

Client ID:	BASE02-SS-2.0	Client:	Maul Foster Alongi
Date Received:	12/08/22	Project:	Sebranke Remedial Action, F&BI 212145
Date Extracted:	12/08/22	Lab ID:	212145-04
Date Analyzed:	12/08/22	Data File:	212145-04.176
Matrix:	Soil	Instrument:	ICPMS2
Units:	mg/kg (ppm) Dry Weight	Operator:	SP

Analyte:	Concentration mg/kg (ppm)
Arsenic	5.69
Cadmium	<1
Lead	97.0

Provided to Builders Exchange of WA, Inc. For usage Conditions Agreement see www.bxwa.com - Always Verify Scal

Analysis For Total Metals By EPA Method 6020B

Client ID:	BASE03-SS-2.0	Client:	Maul Foster Alongi
Date Received:	12/08/22	Project:	Sebranke Remedial Action, F&BI 212145
Date Extracted:	12/08/22	Lab ID:	212145-05
Date Analyzed:	12/08/22	Data File:	212145-05.177
Matrix:	Soil	Instrument:	ICPMS2
Units:	mg/kg (ppm) Dry Weight	Operator:	SP

Analyte:	Concentration mg/kg (ppm)
Arsenic	4.05
Cadmium	<1
Lead	104

Provided to Builders Exchange of WA, Inc. For usage Conditions Agreement see www.bxwa.com - Always Verify Scal

Analysis For Total Metals By EPA Method 6020B

Client ID:	BASE04-SS-2.0	Client:	Maul Foster Alongi
Date Received:	12/08/22	Project:	Sebranke Remedial Action, F&BI 212145
Date Extracted:	12/08/22	Lab ID:	212145-06
Date Analyzed:	12/08/22	Data File:	212145-06.178
Matrix:	Soil	Instrument:	ICPMS2
Units:	mg/kg (ppm) Dry Weight	Operator:	SP

Analyte:	Concentration mg/kg (ppm)
Arsenic	4.96
Cadmium	<1

Provided to Builders Exchange of WA, Inc. For usage Conditions Agreement see www.bxwa.com - Always Verify Scal

Analysis For Total Metals By EPA Method 6020B

Client ID:	BASE04-SS-2.0	Client:	Maul Foster Alongi
Date Received:	12/08/22	Project:	Sebranke Remedial Action, F&BI 212145
Date Extracted:	12/08/22	Lab ID:	212145-06 x5
Date Analyzed:	12/09/22	Data File:	212145-06 x5.106
Matrix:	Soil	Instrument:	ICPMS2
Units:	mg/kg (ppm) Dry Weight	Operator:	SP

Analyte:	Concentration mg/kg (ppm)
Lead	569

Provided to Builders Exchange of WA, Inc. For usage Conditions Agreement see www.bxwa.com - Always Verify Scal

Analysis For Total Metals By EPA Method 6020B

Client ID:	DUP-SS-1.0	Client:	Maul Foster Alongi
Date Received:	12/08/22	Project:	Sebranke Remedial Action, F&BI 212145
Date Extracted:	12/08/22	Lab ID:	212145-07
Date Analyzed:	12/08/22	Data File:	212145-07.181
Matrix:	Soil	Instrument:	ICPMS2
Units:	mg/kg (ppm) Dry Weight	Operator:	SP

Analyte:	Concentration mg/kg (ppm)
Arsenic	11.0
Cadmium	1.94

Provided to Builders Exchange of WA, Inc. For usage Conditions Agreement see www.bxwa.com - Always Verify Scal

Analysis For Total Metals By EPA Method 6020B

Client ID:	DUP-SS-1.0	Client:	Maul Foster Alongi
Date Received:	12/08/22	Project:	Sebranke Remedial Action, F&BI 212145
Date Extracted:	12/08/22	Lab ID:	212145-07 x25
Date Analyzed:	12/09/22	Data File:	212145-07 x25.107
Matrix:	Soil	Instrument:	ICPMS2
Units:	mg/kg (ppm) Dry Weight	Operator:	SP

Analyte:	Concentration mg/kg (ppm)
Lead	1,590

Provided to Builders Exchange of WA, Inc. For usage Conditions Agreement see www.bxwa.com - Always Verify Scal

Analysis For Total Metals By EPA Method 6020B

Client ID:	TSN-SS-6.0	Client:	Maul Foster Alongi
Date Received:	12/08/22	Project:	Sebranke Remedial Action, F&BI 212145
Date Extracted:	12/08/22	Lab ID:	212145-08
Date Analyzed:	12/08/22	Data File:	212145-08.182
Matrix:	Soil	Instrument:	ICPMS2
Units:	mg/kg (ppm) Dry Weight	Operator:	SP

Analyte:	Concentration mg/kg (ppm)
Arsenic	14.7
Cadmium	<1
Lead	47.5

Provided to Builders Exchange of WA, Inc. For usage Conditions Agreement see www.bxwa.com - Always Verify Scal

Analysis For Total Metals By EPA Method 6020B

Client ID:	TSS-SS-6.0	Client:	Maul Foster Alongi
Date Received:	12/08/22	Project:	Sebranke Remedial Action, F&BI 212145
Date Extracted:	12/08/22	Lab ID:	212145-09
Date Analyzed:	12/08/22	Data File:	212145-09.183
Matrix:	Soil	Instrument:	ICPMS2
Units:	mg/kg (ppm) Dry Weight	Operator:	SP

Analyte:	Concentration mg/kg (ppm)
Arsenic	8.59
Cadmium	<2
Lead	10.9

Reporting limits may be raised due to high moisture content.

Provided to Builders Exchange of WA, Inc. For usage Conditions Agreement see www.bxwa.com - Always Verify Scal

Analysis For Total Metals By EPA Method 6020B

Client ID:	TSW-SS-6.0	Client:	Maul Foster Alongi
Date Received:	12/08/22	Project:	Sebranke Remedial Action, F&BI 212145
Date Extracted:	12/08/22	Lab ID:	212145-10
Date Analyzed:	12/08/22	Data File:	212145-10.184
Matrix:	Soil	Instrument:	ICPMS2
Units:	mg/kg (ppm) Dry Weight	Operator:	SP

Analyte:	Concentration mg/kg (ppm)
Arsenic	15.7
Cadmium	<2
Lead	24.3

Reporting limits may be raised due to high moisture content.

Provided to Builders Exchange of WA, Inc. For usage Conditions Agreement see www.bxwa.com - Always Verify Scal

Analysis For Total Metals By EPA Method 6020B

Client ID:	Method Blank	Client:	Maul Foster Alongi
Date Received:	NA	Project:	Sebranke Remedial Action, F&BI 212145
Date Extracted:	12/08/22	Lab ID:	I2-880 mb
Date Analyzed:	12/08/22	Data File:	I2-880 mb.170
Matrix:	Soil	Instrument:	ICPMS2
Units:	mg/kg (ppm) Dry Weight	Operator:	SP

Analyte:	Concentration mg/kg (ppm)
Arsenic	<1
Cadmium	<1
Lead	<1

Provided to Builders Exchange of WA, Inc. For usage Conditions Agreement see www.bxwa.com - Always Verify Scal

Analysis For Semivolatile Compounds By EPA Method 8270E

Client Sample ID:	NSW01-SS-1.0	Client:	Maul Foster Alongi
Date Received:	12/08/22	Project:	Sebranke Remedial Action, F&BI 212145
Date Extracted:	12/08/22	Lab ID:	212145-01 1/25
Date Analyzed:	12/09/22	Data File:	120909.D
Matrix:	Soil	Instrument:	GCMS9
Units:	mg/kg (ppm) Dry Weight	Operator:	ya

Surrogates:	% Recovery:	Lower Limit:	Upper Limit:
Terphenyl-d14	92 d	41	138

Compounds:	Concentration mg/kg (ppm)
Benz(a)anthracene	0.26
Chrysene	0.34
Benzo(a)pyrene	0.40
Benzo(b)fluoranthene	0.61
Benzo(k)fluoranthene	0.19
Indeno(1,2,3-cd)pyrene	0.22
Dibenz(a,h)anthracene	<0.05

Provided to Builders Exchange of WA, Inc. For usage Conditions Agreement see www.bxwa.com - Always Verify Scal

Analysis For Semivolatile Compounds By EPA Method 8270E

Client Sample ID:	WSW02-SS-1.0	Client:	Maul Foster Alongi
Date Received:	12/08/22	Project:	Sebranke Remedial Action, F&BI 212145
Date Extracted:	12/08/22	Lab ID:	212145-02 1/25
Date Analyzed:	12/09/22	Data File:	120910.D
Matrix:	Soil	Instrument:	GCMS9
Units:	mg/kg (ppm) Dry Weight	Operator:	ya

Surrogates:	% Recovery:	Lower Limit:	Upper Limit:
Terphenyl-d14	91 d	41	138

Compounds:	Concentration mg/kg (ppm)
Benz(a)anthracene	0.079
Chrysene	0.12
Benzo(a)pyrene	0.19
Benzo(b)fluoranthene	0.25
Benzo(k)fluoranthene	0.080
Indeno(1,2,3-cd)pyrene	0.14
Dibenz(a,h)anthracene	<0.05

Provided to Builders Exchange of WA, Inc. For usage Conditions Agreement see www.bxwa.com - Always Verify Scal

Analysis For Semivolatile Compounds By EPA Method 8270E

Client Sample ID:	ESW02-SS-1.0	Client:	Maul Foster Alongi
Date Received:	12/08/22	Project:	Sebranke Remedial Action, F&BI 212145
Date Extracted:	12/08/22	Lab ID:	212145-03 1/100
Date Analyzed:	12/13/22	Data File:	121223.D
Matrix:	Soil	Instrument:	GCMS9
Units:	mg/kg (ppm) Dry Weight	Operator:	ya

Surrogates:	% Recovery:	Lower Limit:	Upper Limit:
Terphenyl-d14	82 d	50	124

Compounds:	Concentration mg/kg (ppm)
Benz(a)anthracene	<0.2
Chrysene	0.31
Benzo(a)pyrene	0.33
Benzo(b)fluoranthene	0.64
Benzo(k)fluoranthene	<0.2
Indeno(1,2,3-cd)pyrene	0.34
Dibenz(a,h)anthracene	<0.2

Provided to Builders Exchange of WA, Inc. For usage Conditions Agreement see www.bxwa.com - Always Verify Scal

Analysis For Semivolatile Compounds By EPA Method 8270E

Client Sample ID:	BASE02-SS-2.0	Client:	Maul Foster Alongi
Date Received:	12/08/22	Project:	Sebranke Remedial Action, F&BI 212145
Date Extracted:	12/08/22	Lab ID:	212145-04 1/5
Date Analyzed:	12/09/22	Data File:	120907.D
Matrix:	Soil	Instrument:	GCMS9
Units:	mg/kg (ppm) Dry Weight	Operator:	ya

Surrogates:	% Recovery:	Lower Limit:	Upper Limit:
Terphenyl-d14	98	41	138

Compounds:	Concentration mg/kg (ppm)
Benz(a)anthracene	0.023
Chrysene	0.031
Benzo(a)pyrene	0.035
Benzo(b)fluoranthene	0.051
Benzo(k)fluoranthene	0.014
Indeno(1,2,3-cd)pyrene	0.030
Dibenz(a,h)anthracene	<0.01

Provided to Builders Exchange of WA, Inc. For usage Conditions Agreement see www.bxwa.com - Always Verify Scal

Analysis For Semivolatile Compounds By EPA Method 8270E

Client Sample ID:	BASE03-SS-2.0	Client:	Maul Foster Alongi
Date Received:	12/08/22	Project:	Sebranke Remedial Action, F&BI 212145
Date Extracted:	12/08/22	Lab ID:	212145-05 1/5
Date Analyzed:	12/09/22	Data File:	120908.D
Matrix:	Soil	Instrument:	GCMS9
Units:	mg/kg (ppm) Dry Weight	Operator:	ya

Surrogates:	% Recovery:	Lower Limit:	Upper Limit:
Terphenyl-d14	97	41	138

Compounds:	Concentration mg/kg (ppm)
Benz(a)anthracene	0.025
Chrysene	0.042
Benzo(a)pyrene	0.056
Benzo(b)fluoranthene	0.078
Benzo(k)fluoranthene	0.018
Indeno(1,2,3-cd)pyrene	0.053
Dibenz(a,h)anthracene	<0.01

Provided to Builders Exchange of WA, Inc. For usage Conditions Agreement see www.bxwa.com - Always Verify Scal

Analysis For Semivolatile Compounds By EPA Method 8270E

Client Sample ID:	BASE04-SS-2.0	Client:	Maul Foster Alongi
Date Received:	12/08/22	Project:	Sebranke Remedial Action, F&BI 212145
Date Extracted:	12/08/22	Lab ID:	212145-06 1/100
Date Analyzed:	12/13/22	Data File:	121224.D
Matrix:	Soil	Instrument:	GCMS9
Units:	mg/kg (ppm) Dry Weight	Operator:	ya

Surrogates:	% Recovery:	Lower Limit:	Upper Limit:
Terphenyl-d14	88 d	50	124

Compounds:	Concentration mg/kg (ppm)
Benz(a)anthracene	<0.2
Chrysene	0.22
Benzo(a)pyrene	0.24
Benzo(b)fluoranthene	0.35
Benzo(k)fluoranthene	<0.2
Indeno(1,2,3-cd)pyrene	<0.2
Dibenz(a,h)anthracene	<0.2

Provided to Builders Exchange of WA, Inc. For usage Conditions Agreement see www.bxwa.com - Always Verify Scal

Analysis For Semivolatile Compounds By EPA Method 8270E

Client Sample ID:	DUP-SS-1.0	Client:	Maul Foster Alongi
Date Received:	12/08/22	Project:	Sebranke Remedial Action, F&BI 212145
Date Extracted:	12/08/22	Lab ID:	212145-07 1/25
Date Analyzed:	12/09/22	Data File:	120912.D
Matrix:	Soil	Instrument:	GCMS9
Units:	mg/kg (ppm) Dry Weight	Operator:	ya

Surrogates:	% Recovery:	Lower Limit:	Upper Limit:
Terphenyl-d14	115 d	41	138

Compounds:	Concentration mg/kg (ppm)
Benz(a)anthracene	0.53
Chrysene	0.68
Benzo(a)pyrene	0.67
Benzo(b)fluoranthene	1.3
Benzo(k)fluoranthene	0.36
Indeno(1,2,3-cd)pyrene	0.43
Dibenz(a,h)anthracene	0.099

Provided to Builders Exchange of WA, Inc. For usage Conditions Agreement see www.bxwa.com - Always Verify Scal

Analysis For Semivolatile Compounds By EPA Method 8270E

Client Sample ID:	TSN-SS-6.0	Client:	Maul Foster Alongi
Date Received:	12/08/22	Project:	Sebranke Remedial Action, F&BI 212145
Date Extracted:	12/08/22	Lab ID:	212145-08 1/25
Date Analyzed:	12/09/22	Data File:	120913.D
Matrix:	Soil	Instrument:	GCMS12
Units:	mg/kg (ppm) Dry Weight	Operator:	ya

Surrogates:	% Recovery:	Lower Limit:	Upper Limit:
Terphenyl-d14	85 d	41	138

Compounds:	Concentration mg/kg (ppm)
Benz(a)anthracene	0.10
Chrysene	0.23
Benzo(a)pyrene	0.12
Benzo(b)fluoranthene	0.17
Benzo(k)fluoranthene	<0.05
Indeno(1,2,3-cd)pyrene	0.062
Dibenz(a,h)anthracene	<0.05

Provided to Builders Exchange of WA, Inc. For usage Conditions Agreement see www.bxwa.com - Always Verify Scal

Analysis For Semivolatile Compounds By EPA Method 8270E

Client Sample ID:	TSS-SS-6.0	Client:	Maul Foster Alongi
Date Received:	12/08/22	Project:	Sebranke Remedial Action, F&BI 212145
Date Extracted:	12/08/22	Lab ID:	212145-09 1/5
Date Analyzed:	12/09/22	Data File:	120911.D
Matrix:	Soil	Instrument:	GCMS12
Units:	mg/kg (ppm) Dry Weight	Operator:	ya

Surrogates:	% Recovery:	Lower Limit:	Upper Limit:
Nitrobenzene-d5	46	15	144
Terphenyl-d14	82	41	138

Compounds:	Concentration mg/kg (ppm)
Naphthalene	0.10
2-Methylnaphthalene	0.22
1-Methylnaphthalene	0.16
Benz(a)anthracene	<0.02
Chrysene	0.035
Benzo(a)pyrene	<0.02
Benzo(b)fluoranthene	<0.02
Benzo(k)fluoranthene	<0.02
Indeno(1,2,3-cd)pyrene	<0.02
Dibenz(a,h)anthracene	<0.02

Note: Reporting limits have been elevated due to high moisture content in the sample.

Provided to Builders Exchange of WA, Inc. For usage Conditions Agreement see www.bxwa.com - Always Verify Scal

Analysis For Semivolatile Compounds By EPA Method 8270E

Client Sample ID:	TSW-SS-6.0	Client:	Maul Foster Alongi
Date Received:	12/08/22	Project:	Sebranke Remedial Action, F&BI 212145
Date Extracted:	12/08/22	Lab ID:	212145-10 1/5
Date Analyzed:	12/09/22	Data File:	120912.D
Matrix:	Soil	Instrument:	GCMS12
Units:	mg/kg (ppm) Dry Weight	Operator:	ya

Surrogates:	% Recovery:	Lower Limit:	Upper Limit:
Nitrobenzene-d5	65	15	144
Terphenyl-d14	97	41	138

Compounds:	Concentration mg/kg (ppm)
Naphthalene	<0.02
2-Methylnaphthalene	<0.02
1-Methylnaphthalene	<0.02
Benz(a)anthracene	0.041
Chrysene	0.067
Benzo(a)pyrene	0.058
Benzo(b)fluoranthene	0.091
Benzo(k)fluoranthene	0.028
Indeno(1,2,3-cd)pyrene	0.035
Dibenz(a,h)anthracene	<0.02

Note: Reporting limits have been elevated due to high moisture content in the sample.

Provided to Builders Exchange of WA, Inc. For usage Conditions Agreement see www.bxwa.com - Always Verify Scal

Analysis For Semivolatile Compounds By EPA Method 8270E

Client Sample ID:	Method Blank	Client:	Maul Foster Alongi
Date Received:	Not Applicable	Project:	Sebranke Remedial Action, F&BI 212145
Date Extracted:	12/08/22	Lab ID:	02-2920 mb
Date Analyzed:	12/09/22	Data File:	120906.D
Matrix:	Soil	Instrument:	GCMS9
Units:	mg/kg (ppm) Dry Weight	Operator:	ya

Surrogates:	% Recovery:	Lower Limit:	Upper Limit:
Terphenyl-d14	115	41	138

Compounds:	Concentration mg/kg (ppm)
Naphthalene	<0.01
2-Methylnaphthalene	<0.01
1-Methylnaphthalene	<0.01
Benz(a)anthracene	<0.01
Chrysene	<0.01
Benzo(a)pyrene	<0.01
Benzo(b)fluoranthene	<0.01
Benzo(k)fluoranthene	<0.01
Indeno(1,2,3-cd)pyrene	<0.01
Dibenz(a,h)anthracene	<0.01

Provided to Builders Exchange of WA, Inc. For usage Conditions Agreement see www.bxwa.com - Always Verify Scal

Date of Report: 12/15/22
Date Received: 12/08/22
Project: Sebranke Remedial Action M1030-02.006, F&BI 212145

QUALITY ASSURANCE RESULTS FOR THE ANALYSIS OF SOIL SAMPLES FOR BENZENE, TOLUENE, ETHYLBENZENE, AND XYLENES USING EPA METHOD 8021B

Laboratory Code: 212145-10 (Duplicate)

Analyte	Reporting Units	Sample Result (Wet Wt)	Duplicate Result (Wet Wt)	RPD (Limit 20)
Benzene	mg/kg (ppm)	<0.02	<0.02	nm
Toluene	mg/kg (ppm)	<0.02	<0.02	nm
Ethylbenzene	mg/kg (ppm)	<0.02	<0.02	nm
Xylenes	mg/kg (ppm)	<0.06	<0.06	nm

Laboratory Code: Laboratory Control Sample

Analyte	Reporting Units	Spike Level	Percent Recovery LCS	Acceptance Criteria
Benzene	mg/kg (ppm)	0.5	92	66-121
Toluene	mg/kg (ppm)	0.5	94	72-128
Ethylbenzene	mg/kg (ppm)	0.5	98	69-132
Xylenes	mg/kg (ppm)	1.5	100	69-131

Provided to Builders Exchange of WA, Inc. For usage Conditions Agreement see www.bxwa.com - Always Verify Scal

Date of Report: 12/15/22
Date Received: 12/08/22
Project: Sebranke Remedial Action M1030-02.006, F&BI 212145

QUALITY ASSURANCE RESULTS FROM THE ANALYSIS OF SOIL SAMPLES FOR TOTAL PETROLEUM HYDROCARBONS AS DIESEL EXTENDED USING METHOD NWTPH-Dx

Laboratory Code: 212145-03 (Matrix Spike)

Analyte	Reporting Units	Spike Level	(Wet wt) Sample Result	Percent Recovery MS	Percent Recovery MSD	Acceptance Criteria	RPD (Limit 20)
Diesel Extended	mg/kg (ppm)	2,000	290	102	96	70-130	6

Laboratory Code: Laboratory Control Sample

Analyte	Reporting Units	Spike Level	Percent Recovery LCS	Acceptance Criteria
Diesel Extended	mg/kg (ppm)	2,000	98	70-130

Provided to Builders Exchange of WA, Inc. For usage Conditions Agreement see www.bxwa.com - Always Verify Scal

Date of Report: 12/15/22
Date Received: 12/08/22
Project: Sebranke Remedial Action M1030-02.006, F&BI 212145

QUALITY ASSURANCE RESULTS FROM THE ANALYSIS OF SOIL SAMPLES FOR TOTAL PETROLEUM HYDROCARBONS AS DIESEL EXTENDED USING METHOD NWTPH-Dx

Laboratory Code: 212166-01 (Matrix Spike)

Analyte	Reporting Units	Spike Level	(Wet wt) Sample Result	Percent Recovery MS	Percent Recovery MSD	Acceptance Criteria	RPD (Limit 20)
Diesel Extended	mg/kg (ppm)	2,000	140	109	99	70-130	10

Laboratory Code: Laboratory Control Sample

Analyte	Reporting Units	Spike Level	Percent Recovery LCS	Acceptance Criteria
Diesel Extended	mg/kg (ppm)	2,000	106	70-130

Provided to Builders Exchange of WA, Inc. For usage Conditions Agreement see www.bxwa.com - Always Verify Scal

Date of Report: 12/15/22
Date Received: 12/08/22
Project: Sebranke Remedial Action M1030-02.006, F&BI 212145

QUALITY ASSURANCE RESULTS FOR THE ANALYSIS OF SOIL SAMPLES FOR TOTAL METALS USING EPA METHOD 6020B

Laboratory Code: 212145-03 x5 (Matrix Spike)

Analyte	Reporting Units	Spike Level	Sample Result (Wet wt)	Percent Recovery MS	Percent Recovery MSD	Acceptance Criteria	RPD (Limit 20)
Arsenic	mg/kg (ppm)	10	10.4	88	94	75-125	7
Cadmium	mg/kg (ppm)	10	<5	88	96	75-125	9
Lead	mg/kg (ppm)	50	568	0 b	74 b	75-125	200 b

Laboratory Code: Laboratory Control Sample

Analyte	Reporting Units	Spike Level	Percent Recovery LCS	Acceptance Criteria
Arsenic	mg/kg (ppm)	10	99	80-120
Cadmium	mg/kg (ppm)	10	100	80-120
Lead	mg/kg (ppm)	50	107	80-120

Provided to Builders Exchange of WA, Inc. For usage Conditions Agreement see www.bxwa.com - Always Verify Scal

Date of Report: 12/15/22
Date Received: 12/08/22
Project: Sebranke Remedial Action M1030-02.006, F&BI 212145

QUALITY ASSURANCE RESULTS FOR THE ANALYSIS OF SOIL SAMPLES FOR SEMIVOLATILES BY EPA METHOD 8270E

Laboratory Code: 212145-03 1/25 (Matrix Spike)

Analyte	Reporting Units	Spike Level	Sample Result (Wet wt)	Percent Recovery MS	Percent Recovery MSD	Acceptance Criteria	RPD (Limit 20)
Naphthalene	mg/kg (ppm)	0.83	<0.05	74	80	28-125	8
2-Methylnaphthalene	mg/kg (ppm)	0.83	<0.05	78	85	10-192	9
1-Methylnaphthalene	mg/kg (ppm)	0.83	<0.05	77	84	10-163	9
Benz(a)anthracene	mg/kg (ppm)	0.83	0.20 J	88 b	88 b	50-150	0 b
Chrysene	mg/kg (ppm)	0.83	0.28 J	85 b	83 b	50-150	2 b
Benzo(a)pyrene	mg/kg (ppm)	0.83	0.32 J	88 b	90 b	50-150	2 b
Benzo(b)fluoranthene	mg/kg (ppm)	0.83	0.71 J	122 b	109 b	50-150	11 b
Benzo(k)fluoranthene	mg/kg (ppm)	0.83	0.17 J	111 b	119 b	50-150	7 b
Indeno(1,2,3-cd)pyrene	mg/kg (ppm)	0.83	0.18 J	38 b	52 b	41-134	31 b
Dibenz(a,h)anthracene	mg/kg (ppm)	0.83	<0.05 J	43 vo	57	44-130	28 vo

Laboratory Code: Laboratory Control Sample

Analyte	Reporting Units	Spike Level	Percent Recovery LCS	Acceptance Criteria
Naphthalene	mg/kg (ppm)	0.83	89	58-108
2-Methylnaphthalene	mg/kg (ppm)	0.83	97	67-109
1-Methylnaphthalene	mg/kg (ppm)	0.83	99	66-107
Benz(a)anthracene	mg/kg (ppm)	0.83	95	70-130
Chrysene	mg/kg (ppm)	0.83	103	70-130
Benzo(a)pyrene	mg/kg (ppm)	0.83	97	68-120
Benzo(b)fluoranthene	mg/kg (ppm)	0.83	95	69-125
Benzo(k)fluoranthene	mg/kg (ppm)	0.83	99	70-130
Indeno(1,2,3-cd)pyrene	mg/kg (ppm)	0.83	85	67-129
Dibenz(a,h)anthracene	mg/kg (ppm)	0.83	86	67-128

Provided to Builders Exchange of WA, Inc. For usage Conditions Agreement see www.bxwa.com - Always Verify Scal

Data Qualifiers & Definitions

a - The analyte was detected at a level less than five times the reporting limit. The RPD results may not provide reliable information on the variability of the analysis.

b - The analyte was spiked at a level that was less than five times that present in the sample. Matrix spike recoveries may not be meaningful.

ca - The calibration results for the analyte were outside of acceptance criteria. The value reported is an estimate.

c - The presence of the analyte may be due to carryover from previous sample injections.

cf - The sample was centrifuged prior to analysis.

d - The sample was diluted. Detection limits were raised and surrogate recoveries may not be meaningful.

dv - Insufficient sample volume was available to achieve normal reporting limits.

f - The sample was laboratory filtered prior to analysis.

fb - The analyte was detected in the method blank.

fc - The analyte is a common laboratory and field contaminant.

hr - The sample and duplicate were reextracted and reanalyzed. RPD results were still outside of control limits. Variability is attributed to sample inhomogeneity.

hs - Headspace was present in the container used for analysis.

ht – The analysis was performed outside the method or client-specified holding time requirement.

ip - Recovery fell outside of control limits due to sample matrix effects.

j - The analyte concentration is reported below the lowest calibration standard. The value reported is an estimate.

J - The internal standard associated with the analyte is out of control limits. The reported concentration is an estimate.

jl - The laboratory control sample(s) percent recovery and/or RPD were out of control limits. The reported concentration should be considered an estimate.

js - The surrogate associated with the analyte is out of control limits. The reported concentration should be considered an estimate.

lc - The presence of the analyte is likely due to laboratory contamination.

L - The reported concentration was generated from a library search.

nm - The analyte was not detected in one or more of the duplicate analyses. Therefore, calculation of the RPD is not applicable.

pc - The sample was received with incorrect preservation or in a container not approved by the method. The value reported should be considered an estimate.

ve - The analyte response exceeded the valid instrument calibration range. The value reported is an estimate.

vo - The value reported fell outside the control limits established for this analyte.

x - The sample chromatographic pattern does not resemble the fuel standard used for quantitation.

Provided to Builders Exchange of WA, Inc. For usage Conditions Agreement see www.bxwa.com - Always Verify Scal

SAMPLE CHAIN OF CUSTODY

212145 12/08/22 G3/VS-01

Page # 1 of 1

Report To Carolyn Wise
Company Maul Foster + Alongi
Address 1329 N State St., #301
City, State, ZIP Bellingham, WA 98225
Phone (360) 690-5982 Email cwise@maulfoster.com

SAMPLERS (*signature*)

PROJECT NAME: Sebranke Remedial Action
PO #: M1030-02-006

REMARKS
Project specific RLs? - Yes / No

INVOICE TO: accounting@maulfoster.com

TURNAROUND TIME
☐ Standard turnaround
☒ RUSH 24 hr, see notes
Rush charges authorized by:

SAMPLE DISPOSAL
☐ Archive samples
☐ Other
Default: Dispose after 30 days

Sample ID	Lab ID	Date Sampled	Time Sampled	Sample Type	# of Jars	NWTPH-Dx	NWTPH-Gx	Benzene only BTEX EPA 8021	NWTPH-HCID	VOCs EPA 8260	cPAHs * PAHs EPA 8270	PCBs EPA 8082	As, Cd, Pb Pb 6020A	NWTPH-Dx	Naphthalenes	Toluene, Ethylbenzene, Xylenes	● per CW 12/12/22 Notes ME 48hr TAT
NSW01-SS-1.0	01	12/8/22	1150	S	1	X					X		X				* cPAHs only
WSW02-SS-1.0	02		930		1	X					X		X				Please run
ESW02-SS-1.0	03 A-B		950		2	X					X		X				samples TSN-SS-6.0
BASE02-SS-2.0	04		1108		1	X					X		X				TSS-SS-6.0 and TSW-SS-6.0
BASE03-SS-2.0	05		1105		1	X					X		X				on a 48 hr turn
BASE04-SS-2.0	06		1110		1	X					X		X				Please run all other samples
DUP-SS-1.0	07		955		1	X	ESL				X		X				on a 24 hr turn
TSN-SS-6.0	08 A-E		1000		5	X		X	X		X		X				do not EJL
TSS-SS-6.0	09		1015		5	X		X	X		X		X	●	●		
TSW-SS-6.0	10		1010		5	X		X	X		X		X	●	●	●	

SIGNATURE	PRINT NAME	COMPANY	DATE	TIME
Relinquished by:	Evelyn Linden	MFA	12/08/22	1505
Received by:	ANH PHAN	F&B	12/08/22	15:05
Relinquished by:				
Received by:		Samples received at 0 °C		

Friedman & Bruya, Inc.
Ph. (206) 285-8282

Please do MS/MSD on ESW02-SS-1.0

(NP)

Provided to Builders Exchange of WA, Inc. For usage Conditions Agreement see www.bxwa.com - Always Verify Scal

FRIEDMAN & BRUYA, INC.

ENVIRONMENTAL CHEMISTS

James E. Bruya, Ph.D.
Yelena Aravkina, M.S.
Michael Erdahl, B.S.
Vineta Mills, M.S.
Eric Young, B.S.

5500 4th Avenue South
Seattle, WA 98108
(206) 285-8282
fbi@isomedia.com
www.friedmanandbruya.com

January 12, 2023

Carolyn Wise, Project Manager
Maul Foster Alongi
1329 N State St, Suite 301
Bellingham, WA 98225

Dear Ms Wise:

Included are the additional results from the testing of material submitted on December 8, 2022 from the Sebranke Remedial Action M1030-02.006, F&BI 212145 project. There are 4 pages included in this report.

We appreciate this opportunity to be of service to you and hope you will call if you should have any questions.

Sincerely,

FRIEDMAN & BRUYA, INC.



Michael Erdahl
Project Manager

Enclosures
MFA0112R.DOC

Provided to Builders Exchange of WA, Inc. For usage Conditions Agreement see www.bxwa.com - Always Verify Scal

CASE NARRATIVE

This case narrative encompasses samples received on December 8, 2022 by Friedman & Bruya, Inc. from the Maul Foster Alongi Sebranke Remedial Action M1030-02.006 project. Samples were logged in under the laboratory ID's listed below.

Laboratory ID	Maul Foster Alongi
212145 -01	NSW01-SS-1.0
212145 -02	WSW02-SS-1.0
212145 -03	ESW02-SS-1.0
212145 -04	BASE02-SS-2.0
212145 -05	BASE03-SS-2.0
212145 -06	BASE04-SS-2.0
212145 -07	DUP-SS-1.0
212145 -08	TSN-SS-6.0
212145 -09	TSS-SS-6.0
212145 -10	TSW-SS-6.0

The NWTPH-Dx analysis of sample TSN-SS-6.0 was performed outside of the holding time. The data were flagged accordingly.

All other quality control requirements were acceptable.

Provided to Builders Exchange of WA, Inc. For usage Conditions Agreement see www.bxwa.com - Always Verify Scal

Date of Report: 01/12/23
Date Received: 12/08/22
Project: Sebranke Remedial Action M1030-02.006, F&BI 212145
Date Extracted: 01/10/23
Date Analyzed: 01/10/23

RESULTS FROM THE ANALYSIS OF SOIL SAMPLES FOR TOTAL PETROLEUM HYDROCARBONS AS DIESEL AND MOTOR OIL USING METHOD NWTPH-Dx

Results Reported on a Dry Weight Basis
Results Reported as mg/kg (ppm)

Sample ID Laboratory ID	Diesel Range (C_{10}-C_{25})	Motor Oil Range (C_{25}-C_{36})	Surrogate (% Recovery) (Limit 50-150)
TSN-SS-6.0 ht 212145-08	180	<250	96
Method Blank 03-126 MB2	<50	<250	104

Provided to Builders Exchange of WA, Inc. For usage Conditions Agreement see www.bxwa.com - Always Verify Scal

Date of Report: 01/12/23
Date Received: 12/08/22
Project: Sebranke Remedial Action M1030-02.006, F&BI 212145

QUALITY ASSURANCE RESULTS FROM THE ANALYSIS OF SOIL SAMPLES FOR TOTAL PETROLEUM HYDROCARBONS AS DIESEL EXTENDED USING METHOD NWTPH-Dx

Laboratory Code: 301095-01 (Matrix Spike)

Analyte	Reporting Units	Spike Level	(Wet wt) Sample Result	Percent Recovery MS	Percent Recovery MSD	Acceptance Criteria	RPD (Limit 20)
Diesel Extended	mg/kg (ppm)	5,000	<50	116	116	70-130	0

Laboratory Code: Laboratory Control Sample

Analyte	Reporting Units	Spike Level	Percent Recovery LCS	Acceptance Criteria
Diesel Extended	mg/kg (ppm)	5,000	118	70-130

Provided to Builders Exchange of WA, Inc. For usage Conditions Agreement see www.bxwa.com - Always Verify Scal

Data Qualifiers & Definitions

a - The analyte was detected at a level less than five times the reporting limit. The RPD results may not provide reliable information on the variability of the analysis.

b - The analyte was spiked at a level that was less than five times that present in the sample. Matrix spike recoveries may not be meaningful.

ca - The calibration results for the analyte were outside of acceptance criteria. The value reported is an estimate.

c - The presence of the analyte may be due to carryover from previous sample injections.

cf - The sample was centrifuged prior to analysis.

d - The sample was diluted. Detection limits were raised and surrogate recoveries may not be meaningful.

dv - Insufficient sample volume was available to achieve normal reporting limits.

f - The sample was laboratory filtered prior to analysis.

fb - The analyte was detected in the method blank.

fc - The analyte is a common laboratory and field contaminant.

hr - The sample and duplicate were reextracted and reanalyzed. RPD results were still outside of control limits. Variability is attributed to sample inhomogeneity.

hs - Headspace was present in the container used for analysis.

ht – The analysis was performed outside the method or client-specified holding time requirement.

ip - Recovery fell outside of control limits due to sample matrix effects.

j - The analyte concentration is reported below the lowest calibration standard. The value reported is an estimate.

J - The internal standard associated with the analyte is out of control limits. The reported concentration is an estimate.

jl - The laboratory control sample(s) percent recovery and/or RPD were out of control limits. The reported concentration should be considered an estimate.

js - The surrogate associated with the analyte is out of control limits. The reported concentration should be considered an estimate.

lc - The presence of the analyte is likely due to laboratory contamination.

L - The reported concentration was generated from a library search.

nm - The analyte was not detected in one or more of the duplicate analyses. Therefore, calculation of the RPD is not applicable.

pc - The sample was received with incorrect preservation or in a container not approved by the method. The value reported should be considered an estimate.

ve - The analyte response exceeded the valid instrument calibration range. The value reported is an estimate.

vo - The value reported fell outside the control limits established for this analyte.

x - The sample chromatographic pattern does not resemble the fuel standard used for quantitation.

Provided to Builders Exchange of WA, Inc. For usage Conditions Agreement see www.bxwa.com - Always Verify Scal

SAMPLE CHAIN OF CUSTODY

212145 12/08/22 G3/VS-01

Page # 1 of 1

Report To Carolyn Wise
Company Maul Foster + Alongi
Address 1329 N State St., #301
City, State, ZIP Bellingham, WA 98225
Phone (360)1680-3982 Email cwise@maulfoster.com

SAMPLERS (signature)

PROJECT NAME: Sebranke Remedial Action
PO #: M1030-02-004

REMARKS
Project specific RLs? - Yes / No

INVOICE TO: accounting@maulfoster.com

TURNAROUND TIME
☐ Standard turnaround
☒ RUSH 24 hr, see notes
Rush charges authorized by:

SAMPLE DISPOSAL
☐ Archive samples
☐ Other
Default: Dispose after 30 days

Sample ID	Lab ID	Date Sampled	Time Sampled	Sample Type	# of Jars	NWTPH-Dx	NWTPH-Gx	Benzene only BTEX EPA 8021	NWTPH-HCID	VOCs EPA 8260	cPAHs EPA 8270 *	PCBs EPA 8082	As, Cd, Pb by 6020A	NWTPH-Dx	Naphthalenes	Toluene, Ethylbenzene, Xylenes	● per CW 12/12/22 Notes MC 48hr TAT
NSW01-SS-1.0	01	12/8/22	1150	S	1	X					X		X				*cPAHs only
WSW02-SS-1.0	02		930		1	X					X		X				Please run
ESW02-SS-1.0	03 A-B		950		2	X					X		X				samples
BASE02-SS-2.0	04		1108		1	X					X		X				TSN-SS-6.0
BASE03-SS-2.0	05		1105		1	X					X		X				TSS-SS-6.0
BASE04-SS-2.0	06		1110		1	X					X		X				and TSW-SS-6.0
DUP-SS-1.0	07		955		1	X	ESL				X		X				on a 48 hr turn
TSN-SS-6.0	08 A-E		1000		5	X		X	X		X		X	■			Please run
TSS-SS-6.0	09		1015		5	X		X	X		X		X	●	●		all other samples
TSW-SS-6.0	10		1010		5	X		X	X		X		X	●	●	●	on a 24 hr turn

EJL

do not [illegible] TPH-Dx [illegible] Volatiles 8260

SIGNATURE	PRINT NAME	COMPANY	DATE	TIME
Relinquished by:	Evelyn Linden	MFA	12/08/22	1505
Received by:	ARYAPHAN	FSB	12/08/22	15:05
Relinquished by:				
Received by:		Samples received at 0 °C		

Friedman & Bruya, Inc.
Ph. (206) 285-8282

Please do MS/MSD on ESW02-SS-1.0

EJL

Provided to Builders Exchange of WA, Inc. For usage Conditions Agreement see www.bxwa.com - Always Verify Scal

APPENDIX D

DATA VALIDATION MEMORANDUM



Provided to Builders Exchange of WA, Inc. For usage Conditions Agreement see www.bxwa.com - Always Verify Scal

DATA QUALITY ASSURANCE/QUALITY CONTROL REVIEW

PROJECT NO. M1030.02.006 | JANUARY 12, 2023 | CITY OF STANWOOD

Maul Foster & Alongi, Inc. (MFA), conducted an independent Stage 2A review of the quality of analytical results for soil samples and an associated quality control sample collected in December 2022 and January 2023 at the Sebranke property located at 8627 271st Street NW, Stanwood, Washington.

Friedman & Bruya, Inc. (FBI), performed the analyses. MFA reviewed FBI report numbers 212084, 212145, 212145-additional, 212214, and 301016. The analyses performed and the samples analyzed are listed in the following tables. Not all analyses were performed on all samples.

Analysis	Reference
Diesel- and motor-oil-range hydrocarbons	NWTPH-Dx
Gasoline, diesel, and heavy oil	NWTPH-HCID
Percent moisture	ASTM D2216-98
Total metals	EPA 6020B
Semivolatile organic compounds	EPA 8270E
Volatile organic compounds	EPA 8021B

Notes
ASTM = ASTM International.
EPA = U.S. Environmental Protection Agency.
HCID = hydrocarbon identification.
NWTPH = Northwest Total Petroleum Hydrocarbons.

Samples Analyzed		
Report 212084	**Report 212145**	**Report 212214**
01-SS-6.0	NSW01-SS-1.0	NSW02-SS-1.0
ESW01-SS-1.0	WSW02-SS-1.0	WSW03-SS-1.0
SSW01-SS-1.0	ESW02-SS-1.0	**Report 301016**
SSW02-SS-1.0	BASE02-SS-2.0	WSW04-SS-1.0
WSW01-SS-1.0	BASE03-SS-2.0	BASE05-SS-2.0
BASE01-SS-1.0	BASE04-SS-2.0	--
--	DUP-SS-1.0	--
--	TSN-SS-6.0[a]	--
--	TSS-SS-6.0	--
--	TSW-SS-6.0	--

Note
[a]Sample also analyzed in report 212145-additional.

Provided to Builders Exchange of WA, Inc. For usage Conditions Agreement see www.bxwa.com - Always Verify Scal

DATA QUALIFICATION

Analytical results were evaluated according to applicable sections of U.S. Environmental Protection Agency (EPA) guidelines for data review (EPA 2020a, 2020b) and appropriate laboratory- and method-specific guidelines (EPA 1986, FBI 2019).

Data validation procedures were modified, as appropriate, to accommodate quality control requirements for methods that EPA data review procedures do not specifically address (e.g., Northwest Total Petroleum Hydrocarbons [NWTPH]-Dx).

Based on the results of the data quality review procedures described below, the data, with the appropriate final data qualifiers assigned, are considered acceptable for their intended use. Final data qualifiers represent qualifiers originating from the laboratory and accepted by the reviewer, and data qualifiers assigned by the reviewer during validation.

Final data qualifiers:

- J = result is estimated.
- J- = result is estimated, but the result may be biased low.
- R = result is rejected. The analyte may or may not be present in the sample.
- U = result is non-detect at the method reporting limit (MRL).
- UJ = result is non-detect with an estimated MRL.

Method NWTPH-HCID is a qualitative method. In report 212145, results for this method are reported as either detect or non-detect. Follow-up NWTPH-Dx analysis was performed on samples TSN-SS-6.0, TSS-SS-6.0, and TSW-SS-6.0. FBI reported a laboratory method blank but did not report other batch quality control results for NWTPH-HCID. Qualification by the reviewer was not required.

In report 212145, FBI noted that the diesel-range hydrocarbons results for samples NSW01-SS-1.0, WSW02-SS-1.0, ESW02-SS-1.0, BASE04-SS-2.0, and DUP-SS-1.0 had chromatographic patterns that did not resemble the fuel standard used for quantitation. Results were reported as diesel-range hydrocarbons instead of specific fuel products; thus, qualification by the reviewer was not required.

SAMPLE CONDITIONS

Sample Custody

Sample custody was appropriately documented on the chain-of-custody (COC) forms accompanying the reports.

Holding Times

According to report 212145-additional, the NWTPH-Dx extraction of sample TSN-SS-6.0 was performed outside the 14-day method-recommended holding time, at 33 days. The

Provided to Builders Exchange of WA, Inc. For usage Conditions Agreement see www.bxwa.com - Always Verify Scal

reviewer confirmed that NWTPH-Dx analysis on this sample was requested by MFA outside the holding time. The reviewer qualified the results, as shown in the following table. The reviewer noted that this sample was analyzed for NWTPH-HCID within the holding time and showed a heavy oil detection, but the motor-oil-range hydrocarbons result was non-detect when analyzed by NWTPH-Dx outside holding time.

Report	Sample	Analyte	Original Result (mg/kg)	Qualified Result (mg/kg)
212145-additional	TSN-SS-6.0	Diesel-range hydrocarbons	180	180 J-
		Motor-oil-range hydrocarbons	250 U	R

Notes
J- = result is estimated, but the result may be biased low.
mg/kg = milligrams per kilogram.
R = result is rejected. The analyte may or may not be present in the sample.
U = result is non-detect at the method reporting limit.

The remaining extractions and analyses were performed within the recommended holding times.

Preservation and Sample Storage

The samples were preserved and stored appropriately.

REPORTING LIMITS

The laboratory evaluated results to MRLs. Samples that required dilutions because of high analyte concentrations, matrix interferences, and/or dilutions necessary for preparation and/or analysis were reported with raised MRLs.

The reviewer confirmed that when samples were diluted for analysis or when a higher sample volume was used for the extraction, FBI provided the preparation or dilution factor after the laboratory sample identification number (e.g., 212084-06 x10 indicates a dilution factor of 10).

Due to high moisture content, the laboratory raised some MRLs for sample 01-SS-6.0 in report 212084, and samples TSS-SS-6.0 and TSW-SS-6.0 in report 212145. Moisture ranged from 55 percent to 75 percent for these samples. Qualification by the reviewer was not required.

BLANKS

Method Blanks

Laboratory method blanks are used to assess whether laboratory contamination was introduced during sample preparation and analysis. Laboratory method blank analyses were performed at the required frequencies. For purposes of data qualification, the laboratory method blanks were associated with all samples prepared in the analytical batch.

Provided to Builders Exchange of WA, Inc. For usage Conditions Agreement see www.bxwa.com - Always Verify Scal

All laboratory method blank results were non-detect to MRLs.

Equipment Rinsate Blanks

Equipment rinsate blanks are used to evaluate field equipment decontamination. These blanks were not required for this sampling event, as all samples were collected using dedicated, single-use equipment.

Trip Blanks

Trip blanks are used to evaluate whether volatile organic compound contamination was introduced during sample storage and during shipment between the sampling location and the laboratory.

A trip blank sample was not submitted for analysis. Sample storage and shipment conditions could not be evaluated by the reviewer for potential volatile organic compound contamination.

LABORATORY CONTROL SAMPLE AND LABORATORY CONTROL SAMPLE DUPLICATE RESULTS

A laboratory control sample (LCS) and a laboratory control sample duplicate (LCSD) are spiked with target analytes to provide information about laboratory precision and accuracy.

FBI did not report LCSD for any methods; laboratory precision was evaluated using laboratory duplicates or matrix spike (MS) and matrix spike duplicate (MSD) results. The LCS were prepared and analyzed at the required frequency.

All LCS results were within acceptance limits for percent recovery.

LABORATORY DUPLICATE RESULTS

Laboratory duplicate results are used to evaluate laboratory precision.

Laboratory duplicate results were only reported for EPA Method 8021B in report 212145, which was prepared and analyzed at the required frequency. Laboratory precision was evaluated using MS and MSD results for the remaining methods.

Laboratory duplicate results greater than five times the MRL were evaluated using laboratory relative percent difference (RPD) control limits. Laboratory duplicate results less than five times the MRL, including non-detects, were evaluated using a control limit of the MRL of the parent sample; the absolute difference of the laboratory duplicate sample result and the parent sample result, or the MRL for non-detects, was compared to the MRL of the parent sample.

All laboratory duplicate results met the acceptance criteria.

Provided to Builders Exchange of WA, Inc. For usage Conditions Agreement see www.bxwa.com - Always Verify Scal

MATRIX SPIKE AND MATRIX SPIKE DUPLICATE RESULTS

MS and MSD results are used to evaluate laboratory precision, accuracy, and the effect of the sample matrix on sample preparation and analysis. MS and MSD were not reported for EPA Method 8021B in report 212145; laboratory precision and accuracy were evaluated using laboratory duplicate and LCS results for this method. All remaining MS and MSD samples were prepared and analyzed at the required frequency.

When MS and MSD were prepared from samples with high concentrations of target analytes, associated MS and/or MSD percent recovery and/or RPD control limit exceedances did not require qualification because spike concentrations could not be accurately quantified. High concentrations of target analytes are defined as four times the spike amount for all analyses.

When MS and MSD were prepared with samples from unrelated projects, the MS and/or MSD percent recovery and/or RPD control limit exceedances did not require qualification because these sample matrices were not representative of project sample matrices.

In report 212084, FBI reported the initial and reanalysis of the EPA Method 6020B MS and MSD prepared with sample ESW01-SS-1.0. Arsenic and cadmium in the source sample were reported undiluted, and lead was reported using a dilution factor of 5, so the reviewer evaluated each analyte to the matching MS and MSD analysis. Arsenic and cadmium had no issues in the initial, undiluted analysis and thus did not require qualification. The MS and MSD reported using a dilution factor of 5 had lead results below the lower percent recovery acceptance limit of 75 percent, at 36 percent and 35 percent, respectively. The reviewer qualified the associated lead result, as shown in the following table:

Report	Sample	Analyte	Original Result (mg/kg)	Qualified Result (mg/kg)
212084	ESW01-SS-1.0	Lead	123	123 J

Notes
J = result is estimated.
mg/kg = milligrams per kilogram.

According to report 212145, the EPA Method 8270E MS prepared with sample ESW02-SS-1.0 had some low recoveries. The MS had indeno(1,2,3-cd)pyrene and dibenz(a,h)anthracene results below their respective lower percent recovery acceptance limits, at 38 percent and 43 percent, respectively. The associated MSD had passing recoveries for all analytes. The MS was analyzed using a dilution factor of 25 and was sourced to an analysis of sample ESW02-SS-1.0 at the same dilution; this was noted by FBI to have poor internal standard recoveries; however, FBI reported sample ESW02-SS-1.0 EPA Method 8270E results from an analysis using a dilution factor of 100. The reviewer confirmed with the laboratory that the MS and MSD were not reanalyzed using a dilution factor of 100 since the spiked analytes would be below MRLs, and the source sample was not reanalyzed using a dilution factor of 25 since the internal standard recoveries indicated matrix interference but not a miss-injection at the instrument. Since the MS and MSD were not able to be analyzed using a dilution factor of 100 with appropriate spike levels, it is not known whether matrix interference would have been reduced

Provided to Builders Exchange of WA, Inc. For usage Conditions Agreement see www.bxwa.com - Always Verify Scal

or the analytes would have had passing recoveries. Given the low MS recoveries and the absence of information for an MS and MSD at the same reported dilution as the source sample, the reviewer qualified associated indeno(1,2,3-cd)pyrene and dibenz(a,h)anthracene results for sample ESW02-SS-1.0, as well as the results in the associated field duplicate sample DUP-SS-1.0, as shown in the following table.

Report	Sample	Analyte	Original Result (mg/kg)	Qualified Result (mg/kg)
212145	ESW02-SS-1.0	Indeno(1,2,3-cd)pyrene	0.34	0.34 J
		Dibenz(a,h)anthracene	0.2 U	0.2 UJ
	DUP-SS-1.0	Indeno(1,2,3-cd)pyrene	0.43	0.43 J
		Dibenz(a,h)anthracene	0.099	0.099 J

Notes
J = result is estimated.
mg/kg = milligrams per kilogram.
U = result is non-detect at the method reporting limit.
UJ = result is non-detect with an estimated method reporting limit.

All remaining MS and MSD results were within acceptance limits for percent recovery and RPD.

SURROGATE RECOVERY RESULTS

The samples were spiked with surrogate compounds to evaluate laboratory performance for individual samples for organic analyses.

All surrogate results were within percent recovery acceptance limits.

FIELD DUPLICATE RESULTS

Field duplicate samples measure both field and laboratory precision. The following field duplicate and parent sample pair was submitted for analysis:

Report	Parent Sample	Field Duplicate Sample
212145	ESW02-SS-1.0	DUP-SS-1.0

MFA uses acceptance criteria of 100 percent RPD for results that are less than five times the MRL or 50 percent RPD for results that are greater than five times the MRL. RPD was not evaluated when both results in the sample pair were non-detect. When one result in the sample pair was non-detect, RPD was evaluated using the MRL of the non-detect result.

The reviewer noted that EPA 8270E analysis was performed using different dilution factors for the parent and field duplicate samples, at dilutions of 100 and 25, respectively. The reviewer confirmed that the remaining analyses were performed at the same dilutions for the sample pair. When one result in the sample pair was less than five times the MRL, and the other result

Provided to Builders Exchange of WA, Inc. For usage Conditions Agreement see www.bxwa.com - Always Verify Scal

in the sample pair was greater than five times the MRL, the reviewer evaluated results using the less stringent acceptance criteria of 100 percent RPD.

Field duplicate results that exceeded the acceptance criteria were qualified by the reviewer with J, as shown in the following table.

Report	Sample	Analyte	RPD (%)	Original Result (mg/kg)	Qualified Result (mg/kg)
212145	ESW02-SS-1.0	Lead	51.7	937	937 J
	DUP-SS-1.0			1,590	1,590 J

Notes
J = result is estimated.
mg/kg = milligrams per kilogram.
RPD = relative percent difference.

All remaining field duplicate results met the RPD acceptance criteria.

DATA PACKAGE

The data package was reviewed for transcription errors, omissions, and anomalies.

The COC accompanying report 212084 shows a correction to the analytical suite that was initialed by the sampler, and notation by FBI that indicates the requested analysis for EPA Method 8270E only needs carcinogenic polycyclic aromatic hydrocarbons. The reviewer confirmed that this update was requested by the MFA project manager after sample receipt.

The COC accompanying report 212145 shows corrections to the analytical suite that are initialed by the sampler, and notation by FBI that adds some methods to the analytical suite for some samples. The reviewer confirmed that these updates were requested by the MFA project manager after sample receipt.

Report 212145-additional was reported separately from report 212145 due to analysis that was requested by MFA after the initial report was released. FBI marked the additional analysis on the COC accompanying report 212145-additional.

At MFA's request, FBI released a revision for report 212084 that included additional EPA Method 6020B batch quality control results. FBI noted this update on the first cover page of the revision.

No other issues were found.

Provided to Builders Exchange of WA, Inc. For usage Conditions Agreement see www.bxwa.com - Always Verify Scal

REFERENCES

EPA. 1986. *Test Methods for Evaluating Solid Waste, Physical/Chemical Methods.* EPA publication SW-846. 3rd ed. U.S. Environmental Protection Agency. Final updates I (1993), II (1995), IIA (1994), IIB (1995), III (1997), IIIA (1999), IIIB (2005), IV (2008), V (2015), VI phase I (2017), VI phase II (2018), VI phase III (2019), VII phase I (2019), and VII phase II (2020).

EPA. 2020a. *National Functional Guidelines for Inorganic Superfund Methods Data Review.* EPA 542-R-20-006. U.S. Environmental Protection Agency, Office of Superfund Remediation and Technology Innovation: Washington, DC. November.

EPA. 2020b. *National Functional Guidelines for Organic Superfund Methods Data Review.* EPA 540-R-20-005. U.S. Environmental Protection Agency, Office of Superfund Remediation and Technology Innovation: Washington, DC. November.

FBI. 2019. *Quality Assurance Manual.* Rev. 17. Friedman & Bruya, Inc.: Seattle, WA. November 6.

Provided to Builders Exchange of WA, Inc. For usage Conditions Agreement see www.bxwa.com - Always Verify Scal

APPENDIX E

UST CLOSURE DOCUMENTATION



Provided to Builders Exchange of WA, Inc. For usage Conditions Agreement see www.bxwa.com - Always Verify Scal

DEPARTMENT OF ECOLOGY
State of Washington

PERMANENT CLOSURE NOTICE
FOR UNDERGROUND STORAGE TANKS

UST ID #: 620601

County: Snohomish

This notice certifies that permanent closure activities were performed and conducted in accordance with Chapter 173-360A WAC. Instructions are found on the back page.

I. UST FACILITY			II. OWNER/OPERATOR INFORMATION		
Facility Compliance Tag #: CSID: 15464			Owner/Operator Name: City Of Stanwood		
UST ID #: 620601			Business Name:		
Site Name: Sebranke Property			Address: 10220 270th Street NW		
Site Address: 8627 271ST Street NW			City: Stanwood	State: WA	Zip: 98292
City: Stanwood			Phone: 360-502-1326		
Phone:			Email: Alan.Lytton@ci.stanwood.wa.us		

III. CERTIFIED UST DECOMMISSIONER					
Company Name: Wyser Construction			Service Provider Name: Andrew Hinton		
Address: 19015 109th Ave SE			Certification Type: ICC UST Decommisioner		
City: Snohomish	State: WA	Zip: 98296	Cert. No.: 10223709	Exp. Date: 10/18/2024	
Provider Phone: 206-678-5122			Provider Email: andrew@wyserdirt.com		
Provider Signature: Andrew Hinton Digitally signed by Andrew Hinton DN: C=US, E=andrew@wyserdirt.com, O=Wyser Construction, OU=Project Manager, CN=Andrew Hinton Date: 2022.12.09 10:12:21-08'00'			***Date:*** 12-9-2022		

IV. TANK INFORMATION

TANK ID	TANK CAPACITY	LAST SUBSTANCE STORED	CLOSURE METHOD			CLOSURE DATE
			removal	closed-in-place	change-in-service	
1	850	Unknown	☐	☒	☐	12-8-2022
			☐	☐	☐	
			☐	☐	☐	
			☐	☐	☐	
			☐	☐	☐	
			☐	☐	☐	

V. REQUIRED SIGNATURE

Signature acknowledges UST(s) comply with UST regulation WAC 173-360A-0810 Permanent Closure Requirements.

12/9/2022	Alan Lytton Digitally signed by Alan Lytton DN: C=US, E=alan.lytton@ci.stanwood.wa.us, O=City of Stanwood, OU=Public Works, CN=Alan Lytton Date: 2022.12.09 10:09:57-08'00'	Alan Lytton
Date	Signature of Tank Owner/Operator or Authorized Representative	Print or Type Name

ECY 020-94 (Revised October 2018)

Provided to Builders Exchange of WA, Inc. For usage Conditions Agreement see www.bxwa.com - Always Verify Scal

PERMANENT CLOSURE NOTICE
FOR UNDERGROUND STORAGE TANKS

INSTRUCTIONS

This form must be completed and submitted **within thirty days of completing** permanent closure activities to the following address:

Dept. of Ecology
UST Section
PO Box 47655
Olympia, WA 98504-7655

I./II. UST Facility and Owner/Operator: Fill out these sections completely. If you do not know your UST ID number, include the facility compliance tag number. If all tanks at the site are permanently closed, the facility compliance tag must be returned with this notice.

III. UST Decommissioner: It is the responsibility of the ICC-certified Decommissioner to follow proper tank closure procedures in accordance with WAC 173-360A-0810. The Decommissioner signature certifies these procedures were followed.

IV. Tank Information: Use the same Tank IDs that are listed on the facility's Business License. List the last substance stored in each tank, the tank sizes, the method by which the tank is being closed, and the date closure activities were conducted. All closure methods require a site assessment be conducted in accordance with Ecology's *Guidance for Site Checks and Site Assessments for Underground Storage Tanks*.

V. Required Signature: The owner and/or operator's signature is required. Also, the owner and/or operator is responsible for reporting confirmed releases to Ecology within 24 hours.

All confirmed releases must be reported to Ecology by the owner immediately and by service providers within 72 hours of the discovery of the condition. If the owner or operator is not immediately available, the report should be made directly to Ecology.

Be sure to contact your local fire marshal and other local jurisdictions. They may have other codes and regulations that apply to a permanent tank closure.

Further questions? *Please contact your regional office below and ask for a tank inspector to assist you.*

Regional Office	Counties Served
Central (509) 575-2490	Benton, Chelan, Douglas, Kittitas, Klickitat, Okanogan, Yakima
Eastern (509) 329-3400	Adams, Asotin, Columbia, Ferry, Franklin, Garfield, Grant, Lincoln, Pend Oreille, Spokane, Stevens, Walla Walla, Whitman
HQ (360) 407-7170	Federal facilities in Western Washington
Northwest (425) 649-7000	Island, King, Kitsap, San Juan, Skagit, Snohomish, Whatcom
Southwest (360) 407-6300	Clallam, Clark, Cowlitz, Grays Harbor, Jefferson, Lewis, Mason, Pacific, Pierce, Skamania, Thurston, Wahkiakum

or find a complete list of UST inspectors at:
www.ecy.wa.gov/programs/tcp/ust-lust/people.html

Provided to Builders Exchange of WA, Inc. For usage Conditions Agreement see www.bxwa.com - Always Verify Scal

SOUND TESTING, INC.
P.O. BOX 16204 SEATTLE, WA 98116
(206) 932-0206 FAX (206) 937-3848
WWW.SOUNDTESTINGINC.COM

MARINE CHEMIST CERTIFICATE

SERIAL Nº 48014

Wyser Survey Requested by	Wyser Vessel Owner or Agent	12/08/22 Date
~850 gal UST Vessel	UST Type of Vessel	8627 27th St. NW. Stanwood Specific Location of Vessel
Water / WASTE OIL (3x) Last Three (3) Loadings	O₂, LEL, CO, H₂S, VOC, Visual Tests Performed	1245 Time Survey Completed

~850 gal UST → Safe for Excavation

20.8 x O_2 < 1% LEL. 20ppm CO, <1ppm H_2S

21ppm VOC.

Tank was pumped free of clean water & triple rinsed.

Tank to be filled w/ CDF and buried in place.

In the event of changes adversely affecting conditions in the above spaces, or if in any doubt, immediately stop all work and contact the undersigned Marine Chemist.

Qualifications: Manipulation of valves or devices tending to alter conditions in pipe lines or tanks noted above, unless specifically approved in this certificate, will require re-inspection and a new Certificate for spaces so affected. All piping, heating coils, pumps and floating roof gaskets attached to or contained within spaces listed above shall be considered "NOT SAFE" unless otherwise specifically designated.

STANDARD SAFETY DESIGNATIONS

(These detail the minimum conditions for Safe Entry and Hot Work.) The Marine Chemist may request additional measures if workplace conditions so dictate.

ATMOSPHERE SAFE FOR WORKERS means that in a space (a) the oxygen content is between 19.5% and 22% by volume, and (b) combustible gas is less than 10% of the Lower Explosive Limit, and (c) airborne toxic materials are within permissible concentrations as listed in OSHA's Subpart Z or in ACGIH's current list of Threshold Limit Values.

SAFE FOR HOT WORK means that (a) oxygen within the space is less than 22% by volume; and (b) the combustible gas is less than 10% of the Lower Explosive Limit; and (c) cargo residues within the space will not combust during hot work; and (d) pipes that can deliver hazardous materials to the workspace have been separated, blanked, or locked out, and nearby hazardous spaces have been evaluated and noted on the certificate.

NOT SAFE FOR HOT WORK: In the compartment or space so designated, hot work is not permitted.

"The undersigned acknowledges receipt of this Certificate and understands conditions and limitations under which it was issued."

Signed X [signature] Name: Wyser Company: POSTING Date: 12/08/22

This Certificate is based on conditions existing at the time the inspection herein set forth was completed and is issued subject to compliance with all qualifications and instructions.

Signed [signature] Marine Chemist: [illegible] Certificate No.: 778

Provided to Builders Exchange of WA, Inc. For usage Conditions Agreement see www.bxwa.com - Always Verify Scal

STANWOOD REDI-MIX, INC.

PO BOX 69
SILVANA, WA 98287
PHONE: (360) 652-7777
FAX: (360) 652-5685

TICKET
208806

SOLD TO CASH
2431 LARSON RD
STANWOOD

kimmie@stanwoodredi-mix.com

DELIVERED TO
8627 271ST ST NW
STANWOOD
PREPAID GO AFTER AUTH

PLANT NO	DATE	CUSTOMER NO	JOB NO	PUMP COMPANY
1	2022-12-08	CASH	WYSER 120822	

TRUCK NO	PURCHASE ORDER NO	DRIVER NAME	PRECEDING TRUCK	TRIP NO
97	ANDREW HINTON	LOGAN C		1

QUANTITY YD3	SHIPPED YD3	ORDERED YD3	USAGE	Exp Class	SLUMP in.	AEA %
6.00	6.00	6.00	FILL	0	6.00	10.0

PRODUCT CODE	MIX DESCRIPTION
10400C	Control Density Fill

WEIGHTMASTER	MAX JOB-SITE WATER	STANDBY min/YD3
SRM Batch		

SCH. ARR. TIME	13:20:00
BATCH TIME	12:53 PM
LEFT PLANT	12:59 PM
ARRIVED JOB	
START POUR	
END POUR	
LEFT JOB	
ARRIVED PLANT	

PRODUCT ID	QUANTITY	PRODUCT DESCRIPTION	UNIT PRICE	EXTENDED
10400C	6.00	Control Density Fill	133.00	798.00
1044	6.00	Environmental Compliance Charge	4.00	24.00
1045	1.00	Fuel Surcharge Fee (per Ld)	40.00	40.00

JOB SITE WATER	BEGIN REVS	LEFTOVERS YD3	PUMP BLOW-BACK	JOB COMPLETE
0	0	0		

SUB TOTAL	862.00
SALES TAX	0.00
TOTAL PRICE	862.00
CUMULATED TOTAL	862.00

SITE CONDITION

With my signature below, I acknowledge receipt of concrete, extra products, health hazards, and other information contained in this ticket.

Provided to Builders Exchange of WA, Inc. For usage Conditions Agreement see www.bxwa.com - Always Verify Scal

This Shipping Order

must be legibly filled in, in Ink indelible Pencil, or in Carbon, and retained by the agent

Shipper No. 020782

Carrier No. _____

Page 1 of 4

MARINE VACUUM SERVICE, INC.
(Name of carrier) (SCAC)

Date 12-8-22

On Collect on Delivery shipments, the letters "COD" must appear before consignee's name or as otherwise provided in Item 430, Sec.1.

TO:
Consignee MARINE VACUUM SERVICE, INC
Street 1516 S. GRAHAM ST.
City SEATTLE State WA Zip Code 98108

FROM:
Shipper Wyser Construction
Street
City Stanwood State WA Zip Code
24 hr. Emergency Contact Tel. No. 800-540-7491

Route

Vehicle Number 2128

No. of Units & Container Type	HM	BASIC DESCRIPTION UN or NA Number, Proper Shipping Name, Hazard Class, Packing Group	TOTAL QUANTITY (Weight, Volume, Gallons, etc.)	WEIGHT (Subject to Correction)	RATE	CHARGES (For Carrier Use Only)
1 TT		Oily Waste water	1300	Gals		
		Non Reg By DOT				
			1800	Gals		

PLACARDS TENDERED: YES ☐ NO ☒

Note — (1) Where the rate is dependent on value, shippers are required to state specifically in writing the agreed or declared value of the property, as follows: "The agreed or declared value of the property is hereby specifically stated by the shipper to be not exceeding _____ per _____."
(2) Where the applicable tariff provisions specify a limitation of the carrier's liability absent a release or a value declaration by the shipper and the shipper does not release the carrier's liability or declare a value, the carrier's liability shall be limited to the extent provided by such provisions. See NMFC Item 172.
(3) Commodities requiring special or additional care or attention in handling or stowing must be so marked and packaged as to ensure safe transportation. See Section 2(e) of item 360, Bills of Lading, Freight Bills and Statements of Charges and Section 1(a) of the Contract Terms and Conditions for a list of such articles.

I hereby declare that the contents of this consignment are fully and accurately described above by the proper shipping name and are classified, packaged, marked and labelled/placarded, and are in all respects in proper condition for transport according to applicable international and national governmental regulations.

_____ Signature

REMIT C.O.D. TO:
ADDRESS

COD Amt: $

C.O.D. FEE: PREPAID ☐ COLLECT ☐ $

Subject to Section 7 of the conditions, if this shipment is to be delivered to the consignee without recourse on the consignor, the consignor shall sign the following statement:
The carrier shall not make delivery of this shipment without payment of freight and all other lawful charges.

(Signature of Consignor)

TOTAL CHARGES $

FREIGHT CHARGES
FREIGHT PREPAID except when box at right is checked ☐ Check box if charges are to be collect

RECEIVED, subject to the classifications and tariffs in effect on the date of the issue of this Bill of Lading, the property described above in apparent good order, except as noted (contents and condition of contents of packages unknown), marked, consigned, and destined as indicated above which said carrier (the word carrier being understood throughout this contract as meaning any person or corporation in possession of the property under the contract) agrees to carry to its usual place of delivery at said destination, if on its route, otherwise to deliver to another carrier on the route to said destination. It is mutually agreed as to each carrier of all or any of, said property over all or any portion of said route to destination and as to each party at any time interested in all or any said property, that every service to be performed hereunder shall be subject to all the bill of lading terms and conditions in the governing classification on the date of shipment.

Shipper hereby certifies that he is familiar with all the lading terms and conditions in the governing classification and the said terms and conditions are hereby agreed to by the shipper and accepted for himself and his assigns.

SHIPPER
PER [signature] 9:50

CARRIER MARINE VACUUM SERVICE, INC.
PER Rattanj Chan
DATE 12-8-22

2

Permanent post-office address of shipper.

Provided to Builders Exchange of WA, Inc. For usage Conditions Agreement see www.bxwa.com - Always Verify Scal

Marine Vacuum Service, Inc.

GENERAL CONTRACTOR

CONTRACTORS LICENSE # MARINVS097JA

P0. Box 24263 Seattle, Washington 98124

Telephone (206) 762-0240

FAX (206) 763-8084

1-800-540-7491

AST/UST STORAGE TANK PUMP & RINSE CERTIFICATE

Tank Size: 1000 Gallons

Last Contents Waste oil

Tank Location: 8627 271st St

Stanwood WA

Marine Vacuum Service, Inc. certifies that the above mentioned tank(s) have been triple rinsed in accordance with the industry standard as outlined in 40 CFR PART 280.70, WAC 173-360-380(I), API 1604, API 2015 and that all residual product and rinsate has been disposed of in accordance with Federal, State and Local regulations. Tanks listed above are **NOT GAS FREE** or **NOT SAFE FOR HOT WORK**

Tank Owner: City of Stanwood

Contractor: Wyser Construction

M.V.S. Representative: Rattanny Chor

Date: 12-8-27

Notes:

Provided to Builders Exchange of WA, Inc. For usage Conditions Agreement see www.bxwa.com - Always Verify Scal

DEPARTMENT OF ECOLOGY
State of Washington

30-DAY NOTICE

FOR UNDERGROUND STORAGE TANK SYSTEMS

This form provides Ecology 30-days' advanced notice for projects, as required by Chapter 173-360A WAC. Instructions are on the back page.

UST ID #: N/A

County: Snohomish

Please ✓ the appropriate box: ☐ Intent to Install ☑ Intent to Close ☐ Change-in-Service

I. SITE INFORMATION		II. OWNER/OPERATOR INFORMATION	
Tag or UBI # (if applicable): CSID: 15464		Owner/Operator Name: City of Stanwood	
UST ID # (if applicable): N/A		Business Name:	
Site Name: Sebranke Property		Mailing Address: 10220 270th Street NW	
Site Address: 8627 271ST NW		City: Stanwood	State: WA Zip: 98292
City: Stanwood		Phone:	
Phone:		Email:	

III. CERTIFIED SERVICE PROVIDER(S)

Check the appropriate boxes. If more than one service provider is required for this project, fill out both sections.

Note: Individuals performing UST services MUST be ICC-certified or have passed another qualifying exam approved by the Department of Ecology.

1) ☐ Installer ☑ Decommissioner ☐ Site Assessor

Company Name: Wyser Construction	Certification Type: ICC UST Decommissioner
Service Provider Name: Andrew Hinton	Cert. No.: 10223709 Exp. Date: 10/18/24
Provider Phone: 206-678-5122	Provider Email: andrew@wyserdirt.com

2) ☐ Installer ☐ Decommissioner ☑ Site Assessor

Company Name: Maul Foster & Alongi, Inc.	Certification Type: WA Licensed Hydrogeologist
Service Provider Name: Carolyn Wise	Cert. No.: 19110670 Exp. Date: 10/06/23
Provider Phone: 360-690-5982	Provider Email: cwise@maulfoster.com

IV. TANK AND/OR PIPING INFORMATION

TANK ID	TANK CAPACITY	SUBSTANCE STORED	PIPING INSTALLATION OR REPLACEMENT ONLY (Y/N)	DATE PROJECT IS EXPECTED TO BEGIN	COMMENTS
1	850 gallons	Unknown		12/7/2022	30 day Notice time frame waived by: Kale Carlson UST Inspector Department of Ecology 12/6/2022 KC

Provided to Builders Exchange of WA, Inc. For usage Conditions Agreement see www.bxwa.com - Always Verify Scal

30-DAY NOTICE

FOR UNDERGROUND STORAGE TANK SYSTEMS

GENERAL INSTRUCTIONS

Under WAC 173-360A-0300, 173-360A-0810 and 173-360A-0820, owners and/or operators are required to notify the Department of Ecology (Ecology) **at least 30 days prior** to beginning underground storage tank (UST) and/or piping installation, decommissioning, or change-in-service projects by mailing this notice to the address below. A separate form must be used for each project type (e.g. install, removal). Once this form is received by Ecology, it is date-stamped and returned to the owner/operator listed on the form. Installation and decommissioning projects cannot begin within the first 30 days after the date stamped on this form unless the wait-period has been waived by a regional Ecology UST inspector. If a project cannot meet the deadlines described below, an additional 30-Day Notice may be required.

Department of Ecology
Underground Storage Tank Section
PO Box 47655
Olympia, WA 98504-7655

SITE AND OWNER/OPERATOR INFORMATION

Fill in the site/owner information completely. The contact person listed on this form must confirm the exact date an installation or decommissioning project will begin by contacting the regional UST inspector **at least 3 business days** before proceeding.

INSTALLATION/REPLACEMENT OF TANK AND/OR PIPING

Installation projects must begin within 90 days of the date stamped on this notice. Complete the Tank Information section by assigning Tank ID numbers that have not previously been used at the facility. Once processed, this form allows a one-time drop of product for UST system testing purposes only. The fuel drop is not required to occur within the 90-day period. Once your tank(s) store more than one inch of product, leak detection equipment and monitoring must be in place.

To receive additional deliveries and operate the new tanks/piping, you must submit the Business License application, UST Addendum, and the tank/piping Manufacturer's Installation Checklists to the Department of Revenue (DOR) **within 30 days** of completing the installation. This activates the mailing of your Business License with tank endorsement(s) from DOR and the facility compliance tag from Ecology.

If only piping is being installed or replaced piping, the ICC-certified installer must certify the installation by completing the Retrofit/Repair Checklist with the Manufacturer's Installation Checklist and submitting it to the owner/operator. The form packet must be submitted by the owner/operator to Ecology **within 30 days** of completing the piping installation.

PERMANENT CLOSURE OF TANK AND/OR PIPING

Decommissioning projects must be completed within 90 days after the date stamped on this returned notice. Complete the Tank Information section using Tank ID numbers listed on the Business License. Use the Comments box to include additional information, such as the date when product was removed from both the piping and the tank to less than one inch.

Contact your local fire marshal and planning department prior to tank closure to procure any permits required by county or other local jurisdictions. Compliance with the State Environmental Policy Act (SEPA) Rules, Chapter 197-11 WAC may also apply.

A site assessment is required at the time of closure. If contamination is not discovered, a site assessment report must be submitted to the above address **within 30 days**. If contamination is discovered or confirmed, it must be reported to the appropriate Ecology regional office **within 24 hours** and a site characterization report must be submitted to the above address **within 90 days**.

The following are some examples of tanks that are exempt from the UST regulations.

- Farm or residential tanks, 1,100 gallons or less, used to store motor fuel for personal or farm use only. The fuel must be used for farm purposes and cannot be for resale.
- Tanks used for storing heating oil that is used solely for the purpose of heating the premises.
- Tanks with a capacity of 110 gallons or less.
- Emergency overflow tanks, catch basins, or sumps.

If you need this document in a format for the visually impaired, call Toxics Cleanup Program at (360) 407-7170. Persons with hearing loss can call 711 for Washington Relay Service. Persons with speech disability, call (877) 833-6341.

ECY 020-95 (Revised May 2019)

Provided to Builders Exchange of WA, Inc. For usage Conditions Agreement see www.bxwa.com - Always Verify Scal

DEPARTMENT OF ECOLOGY
State of Washington

UST ID #: 620601
County: Snohomish

SITE CHECK/SITE ASSESSMENT CHECKLIST
FOR UNDERGROUND STORAGE TANKS

This checklist certifies that site check or site assessment activities were performed in accordance with Chapter 173-360A WAC. Instructions are found on the last page.

I. UST FACILITY		II. OWNER/OPERATOR INFORMATION	
Facility Compliance Tag #: CSID: 15464		Owner/Operator Name: City of Stanwood	
UST ID #: 620601		Business Name:	
Site Name: Sebranke Property		Address: 10220 270th Street NW	
Site Address: 8627 271st Street NW		City: Stanwood	State: WA Zip: 98292
City: Stanwood		Phone: 360-502-1326	
Phone:		Email: alan.lytton@ci.stanwood.wa. us	

III. CERTIFIED SITE ASSESSOR			
Service Provider Name: Carolyn Wise		Company Name: Maul Foster & Alongi, Inc.	
Cell Phone: 3606905982 Email: cwise@maulfoster.com		Address: 1329 N State Street, Suite 301	
Certification #: WA LHG 19110670	Exp. Date: 10/06/23	City: Bellingham	State: WA Zip: 98225

IV. TANK INFORMATION

TANK ID	TANK CAPACITY	LAST SUBSTANCE STORED	DATE SITE CHECK OR ASSESSMENT CONDUCTED
1	850-gallons	unknown	12/8/2022

V. REASON FOR CONDUCTING SITE CHECK/SITE ASSESSMENT (check one)

- [x] Release investigation following permanent UST system closure (i.e. tank removal or closure-in-place).
- [ ] Release investigation following a failed tank and/or line tightness test.
- [ ] Release investigation following discovery of contaminated soil and/or groundwater.
- [ ] Release investigation directed by Ecology to determine if the UST system is the source of offsite impacts.
- [ ] UST system is undergoing a "change-in-service", which is changing from storing a regulated substance (e.g. gasoline) to storing a non-regulated substance (e.g. water).
- [ ] Directed by Ecology for UST system permanently closed or abandoned before 12/22/1988.
- [ ] Other (describe):

Provided to Builders Exchange of WA, Inc. For usage Conditions Agreement see www.bxwa.com - Always Verify Scal

VI. Checklist

The site assessor must check each of the following items and include it in the report. Sections referenced below can be found in the Ecology publication *Guidance for Site Checks and Site Assessments for Underground Storage Tanks*.	YES	NO
1. The location of the UST site is shown on a vicinity map.	☒	☐
2. A brief summary of information obtained during the site inspection is provided (Section 3.2)	☒	☐
3. A summary of UST system data is provided (Section 3.1)	☒	☐
4. The soils characteristics at the UST site are described. (Section 5.2)	☒	☐
5. Is there any apparent groundwater in the tank excavation?	☒	☐
6. A brief description of the surrounding land use is provided. (Section 3.1)	☒	☐
7. The name and address of the laboratory used to perform analyses is provided. The methods used to collect and analyze the samples, including the number and types of samples collected, are also documented in the report. The data from the laboratory is appended to the report.	☒	☐
8. The following items are provided in one or more sketches:		
• Location and ID number for all field samples collected	☒	☐
• If applicable, groundwater samples are distinguished from soil samples	☒	☐
• Location of samples collected from stockpiled excavated soil	☐	☒
• Tank and piping locations and limits of excavation pit	☒	☐
• Adjacent structures and streets	☒	☐
• Approximate locations of any on-site and nearby utilities	☒	☐
9. If sampling procedures are different from those specified in the guidance, has justification for using these alternative sampling procedures been provided? (Section 3.4)	☒	☐
10. A table is provided showing laboratory results for each sample collected including; sample ID number, constituents analyzed for and corresponding concentration, analytical method, and detection limit for that method. Any sample exceeding MTCA Method A cleanup standards are highlighted or bolded.	☒	☐
11. Any factors that may have compromised the quality of the data or validity of the results are described.	☒	☐
12. The results of this site check/site assessment indicate that a confirmed release of a regulated substance has occurred. The requirements for reporting confirmed releases can be found in WAC 173-360-372.	☒	☐

VII. Required Signatures

Signature acknowledges the Site Check or Site Assessment complies with UST regulations WAC 173-360A-0730 through 0750.

Carolyn Wise	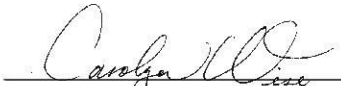	01-03-2023
Print or Type Name	Signature of Certified Site Assessor	Date

Provided to Builders Exchange of WA, Inc. For usage Conditions Agreement see www.bxwa.com - Always Verify Scal

SITE CHECK/SITE ASSESSMENT CHECKLIST
FOR UNDERGROUND STORAGE TANKS

INSTRUCTIONS

This checklist must accompany the results of a Site Check Report, which is performed if a release of petroleum or other regulated substance is suspected. It is also required to accompany a Site Assessment Report, which is required following the permanent closure or "change-in-service" of an underground storage tank system. This form is required to be filled out whether or not contamination is found. This checklist is to be completed by the Site Assessor and submitted **within thirty days of completing** these activities to the following address:

Dept. of Ecology
UST Section
PO Box 47655
Olympia, WA 98504-7655

I./II. UST Facility and Owner/Operator Information: Fill out these sections completely. If you do not know your UST ID number, include the facility compliance tag number.

III. Service Provider Information: It is the responsibility of the ICC-certified Site Assessor to ensure that sampling and documentation procedures are completed in accordance with Ecology's *Guidance for Site Checks and Site Assessment for Underground Storage Tanks*.

IV. Tank Information: Use the same Tank identification numbers listed on the facility's Business License which is based on the most recent UST Addendum on file with Ecology. List the last substance stored in each tank, the tank sizes and the date the site check or site assessment was completed.

V. Required Signature: The Site Assessor signature certifies these procedures were followed.

All confirmed releases must be reported to Ecology by the owner within 24 hours and by service providers within 72 hours of discovery. A Site Characterization Report must be submitted to Ecology within 90 days after confirming a release.

Further questions? *Please contact your regional office below and ask for a tank inspector to assist you.*

Regional Office	Counties Served
Central (509) 575-2490	Benton, Chelan, Douglas, Kittitas, Klickitat, Okanogan, Yakima
Eastern (509) 329-3400	Adams, Asotin, Columbia, Ferry, Franklin, Garfield, Grant, Lincoln, Pend Oreille, Spokane, Stevens, Walla Walla, Whitman
HQ (360) 407-7170	Federal facilities in Western Washington
Northwest (425) 649-7000	Island, King, Kitsap, San Juan, Skagit, Snohomish, Whatcom
Southwest (360) 407-6300	Clallam, Clark, Cowlitz, Grays Harbor, Jefferson, Lewis, Mason, Pacific, Pierce, Skamania, Thurston, Wahkiakum

or find a complete list of UST inspectors at:
www.ecy.wa.gov/programs/tcp/ust-lust/people.html

Provided to Builders Exchange of WA, Inc. For usage Conditions Agreement see www.bxwa.com - Always Verify Scal

APPENDIX F
EXPORT DOCUMENTATION



Provided to Builders Exchange of WA, Inc. For usage Conditions Agreement see www.bxwa.com - Always Verify Scal

WYSER INC
CONSTRUCTION

EXPORT MATERIALS LOG

City of Stanwood - Sebranke Property Cleanup **DATE: December 6, 2022**
SW-225-1672

LOAD NO.	TRUCKING COMPANY	MANIFEST #	DUMP TIME	ESTIMATED QUANTITY	LOCATION	DATE	TYPE OF MATERIALS	TONNAGE SLIPS
1	Wyser Construction	5184/181669	11:30 AM	33.69 ton	Waste Management	12/6/2022	Class 3 Soil	33.69
2								
3								
4								
5								
6								
7								
8								
9								
10								
11								
12								
13								
14								
15								
16								
17								
18								
19								
20								
21					Class	3 Soil	Total Tons	33.69
22								
23								

Provided to Builders Exchange of WA, Inc. For usage Conditions Agreement see www.bxwa.com - Always Verify Scal

WASTE MANAGEMENT

Alaska Street
70 S Alaska Street
Seattle, WA, 98134

Original
Ticket# 181669

Ph: 206 763 5025

Customer Name	WYSER CONSTRUCTION WYSER CONS	Carrier	SELF HAULER *		
Ticket Date	12/06/2022	Vehicle#	W-40T	Volume	
Payment Type	Credit Account	Container			
Manual Ticket#		Driver	KURTIS		
Route	AK	Check#			
Hauling Ticket#		Billing#	0000188		
Destination		Grid			
PO#	SW-22-1672/117650WA				

	Time	Scale	Operator	Inbound		
In	12/06/2022 11:30:48	SCALE 1	galtheim		Gross	103920 lb
Out	12/06/2022 11:30:48		galtheim		Tare	36540 lb
					Net	67380 lb
					Tons	33.69

Comments WYSER-GA

	Product	LD%	Qty	UOM	Rate	Tax	Amount	Origin
1	Daily Cover-PCS-Tons-Pet	100	33.69	Tons				SNOHOMISH
2	EVF-P-Standard Environme	100		%				SNOHOMISH
3	FUELSUR-FUEL SURCHARGE	100		%				SNOHOMISH
4	GONDOLA T-GONDOLA TON	100	33.69	Tons				SNOHOMISH

Total Tax
Total Ticket

Driver`s Signature

Provided to Builders Exchange of WA, Inc. For usage Conditions Agreement see www.bxwa.com - Always Verify Scal

WYSER INC CONSTRUCTION

EXPORT MATERIALS LOG

City of Stanwood - Sebranke Property Cleanup **DATE: December 7, 2022**

SW-225-1672

LOAD NO.	TRUCKING COMPANY	MANIFEST #	DUMP TIME	ESTIMATED QUANTITY	LOCATION	DATE	TYPE OF MATERIALS	TONNAGE SLIPS
1	Wyser Construction	5185/181677	7:04 AM	32.31 ton	Waste Management	12/7/2022	Class 3 Soil	32.31
2	Wyser Construction	5185/181698	10:52 AM	31.08 ton	Waste Management	12/7/2022	Class 3 Soil	31.08
3	Wyser Construction	5185/181720	1:31 PM	32.04 ton	Waste Management	12/7/2022	Class 3 Soil	32.04
4								
5								
6								
7								
8								
9								
10								
11								
12								
13								
14								
15								
16								
17								
18								
19								
20								
21					Class	3 Soil	Total Tons	95.43
22								
23								

Provided to Builders Exchange of WA, Inc. For usage Conditions Agreement see www.bxwa.com - Always Verify Scal

WASTE MANAGEMENT

Alaska Street
70 S Alaska Street
Seattle, WA, 98134

Ph: 206 763 5025

Original
Ticket# 181677

Customer Name WYSER CONSTRUCTION WYSER CONS
Ticket Date 12/07/2022
Payment Type Credit Account
Manual Ticket#
Route AK
Hauling Ticket#
Destination
PO# SW-22-1672/117650WA

Carrier SELF HAULER *
Vehicle# W-40T
Container
Driver KURTIS
Check#
Billing# 0000188
Grid

Volume

	Time	Scale	Operator	
In	12/07/2022 07:04:59	SCALE 1	galtheim	Inbound
Out	12/07/2022 07:04:59		galtheim	

Gross	101160 lb
Tare	36540 lb
Net	64620 lb
Tons	32.31

Comments WYSER-GA

	Product	LD%	Qty	UOM	Rate	Tax	Amount	Origin
1	Daily Cover-PCS-Tons-Pet	100	32.31	Tons				SNOHOMISH
2	EVF-P-Standard Environme	100		%				SNOHOMISH
3	FUELSUR-FUEL SURCHARGE	100		%				SNOHOMISH
4	GONDOLA T-GONDOLA TON	100	32.31	Tons				SNOHOMISH

Total Tax
Total Ticket

Driver`s Signature

Provided to Builders Exchange of WA, Inc. For usage Conditions Agreement see www.bxwa.com - Always Verify Scal

WASTE MANAGEMENT

Alaska Street
70 S Alaska Street
Seattle, WA, 98134

Ph: 206 763 5025

Original
Ticket# 181698

Customer Name WYSER CONSTRUCTION WYSER CONS
Ticket Date 12/07/2022
Payment Type Credit Account
Manual Ticket#
Route AK
Hauling Ticket#
Destination
PO# SW-22-1672/117650WA

Carrier SELF HAULER *
Vehicle# W-40T
Container
Driver KURTIS
Check#
Billing# 0000188
Grid

Volume

	Time	Scale	Operator	Inbound		
In	12/07/2022 10:52:00	SCALE 1	galtheim		Gross	98700 lb
Out	12/07/2022 10:52:00		galtheim		Tare	36540 lb
					Net	62160 lb
					Tons	31.08

Comments WYSER-GA

	Product	LD%	Qty	UOM	Rate	Tax	Amount	Origin
1	Daily Cover-PCS-Tons-Pet	100	31.08	Tons				SNOHOMISH
2	EVF-P-Standard Environme	100		%				SNOHOMISH
3	FUELSUR-FUEL SURCHARGE	100		%				SNOHOMISH
4	GONDOLA T-GONDOLA TON	100	31.08	Tons				SNOHOMISH

Total Tax
Total Ticket

Driver`s Signature

Provided to Builders Exchange of WA, Inc. For usage Conditions Agreement see www.bxwa.com - Always Verify Scal

WASTE MANAGEMENT

Alaska Street
70 S Alaska Street
Seattle, WA, 98134

Ph: 206 763 5025

Original
Ticket# 181720

Customer Name WYSER CONSTRUCTION WYSER CONS
Ticket Date 12/07/2022
Payment Type Credit Account
Manual Ticket#
Route AK
Hauling Ticket#
Destination
PO# SW-22-1672/117650WA

Carrier SELF HAULER *
Vehicle# W-40T
Container
Driver KURTIS
Check#
Billing# 0000188
Grid

Volume

	Time	Scale	Operator	Inbound		
In	12/07/2022 13:31:39	SCALE 1	galtheim		Gross	100620 lb
Out	12/07/2022 13:31:39		galtheim		Tare	36540 lb
					Net	64080 lb
					Tons	32.04

Comments WYSER-GA

	Product	LD%	Qty	UOM	Rate	Tax	Amount	Origin
1	Daily Cover-PCS-Tons-Pet	100	32.04	Tons				SNOHOMISH
2	EVF-P-Standard Environme	100		%				SNOHOMISH
3	FUELSUR-FUEL SURCHARGE	100		%				SNOHOMISH
4	GONDOLA T-GONDOLA TON	100	32.04	Tons				SNOHOMISH

Total Tax
Total Ticket

Driver`s Signature

Provided to Builders Exchange of WA, Inc. For usage Conditions Agreement see www.bxwa.com - Always Verify Scal

WYSER INC CONSTRUCTION

EXPORT MATERIALS LOG

City of Stanwood - Sebranke Property Cleanup **DATE: December 8, 2022**

SW-225-1672

LOAD NO.	TRUCKING COMPANY	MANIFEST #	DUMP TIME	ESTIMATED QUANTITY	LOCATION	DATE	TYPE OF MATERIALS	TONNAGE SLIPS
1	Wyser Construction	5186/181760	9:42 AM	30.85 ton	Waste Management	12/8/2022	Class 3 Soil	30.85
2	Wyser Construction	5186/181789	12:57 PM	31.87 ton	Waste Management	12/8/2022	Class 3 Soil	31.87
3								
4								
5								
6								
7								
8								
9								
10								
11								
12								
13								
14								
15								
16								
17								
18								
19								
20								
21					Class	3 Soil	Total Tons	62.72
22								
23								

Provided to Builders Exchange of WA, Inc. For usage Conditions Agreement see www.bxwa.com - Always Verify Scal

WASTE MANAGEMENT

Alaska Street
70 S Alaska Street
Seattle, WA, 98134

Original
Ticket# 181760

Ph: 206 763 5025

Customer Name WYSER CONSTRUCTION WYSER CONS
Ticket Date 12/08/2022
Payment Type Credit Account
Manual Ticket#
Route AK
Hauling Ticket#
Destination
PO# SW-22-1672/117650WA

Carrier SELF HAULER *
Vehicle# W-40T
Container
Driver KURTIS
Check#
Billing# 0000188
Grid

Volume

	Time	Scale	Operator	Inbound		
In	12/08/2022 09:42:09	SCALE 1	GALTHEIM		Gross	98240 lb
Out	12/08/2022 09:42:09		GALTHEIM		Tare	36540 lb
					Net	61700 lb
					Tons	30.85

Comments WYSER-GA

	Product	LD%	Qty	UOM	Rate	Tax	Amount	Origin
1	Daily Cover-PCS-Tons-Pet	100	30.85	Tons				SNOHOMISH
2	EVF-P-Standard Environme	100		%				SNOHOMISH
3	FUELSUR-FUEL SURCHARGE	100		%				SNOHOMISH
4	GONDOLA T-GONDOLA TON	100	30.85	Tons				SNOHOMISH

Total Tax
Total Ticket

Driver`s Signature

WASTE MANAGEMENT

Alaska Street
70 S Alaska Street
Seattle, WA, 98134

Original
Ticket# 181789

Ph: 206 763 5025

Customer Name WYSER CONSTRUCTION WYSER CONS
Ticket Date 12/08/2022
Payment Type Credit Account
Manual Ticket#
Route AK
Hauling Ticket#
Destination
PO# SW-22-1672/117650WA

Carrier SELF HAULER *
Vehicle# W-40T
Container
Driver KURTIS
Check#
Billing# 0000188
Grid

Volume

	Time	Scale	Operator	Inbound		
In	12/08/2022 12:57:12	SCALE 1	GALTHEIM		Gross	100280 lb
Out	12/08/2022 12:57:12		GALTHEIM		Tare	36540 lb
					Net	63740 lb
					Tons	31.87

Comments WYSER-GA

Provided to Builders Exchange of WA, Inc. For usage Conditions Agreement see www.bxwa.com - Always Verify Scal

WYSER INC CONSTRUCTION

EXPORT MATERIALS LOG

City of Stanwood - Sebranke Property Cleanup **DATE: December 13, 2022**

SW-225-1672

LOAD NO.	TRUCKING COMPANY	MANIFEST #	DUMP TIME	ESTIMATED QUANTITY	LOCATION	DATE	TYPE OF MATERIALS	TONNAGE SLIPS
1	Wyser Construction	5189/181874	9:57 AM	30.87 ton	Waste Management	12/13/2022	Class 3 Soil	30.87
2	Wyser Construction	5189/181885	1:02 PM	29.62 ton	Waste Management	12/13/2022	Class 3 Soil	29.62
3								
4								
5								
6								
7								
8								
9								
10								
11								
12								
13								
14								
15								
16								
17								
18								
19								
20								
21					Class	3 Soil	Total Tons	60.49
22								
23								

Provided to Builders Exchange of WA, Inc. For usage Conditions Agreement see www.bxwa.com - Always Verify Scal

WASTE MANAGEMENT

Alaska Street
70 S Alaska Street
Seattle, WA, 98134

Original
Ticket# 181874

Ph: 206 763 5025

Customer Name WYSER CONSTRUCTION WYSER CONS
Ticket Date 12/13/2022
Payment Type Credit Account
Manual Ticket#
Route AK
Hauling Ticket#
Destination
PO# SW-22-1672/117650WA

Carrier SELF HAULER *
Vehicle# W-40T
Container
Driver KURTIS
Check#
Billing# 0000188
Grid

Volume

	Time	Scale	Operator	Inbound		
In	12/13/2022 09:57:02	SCALE 1	galtheim		Gross	98280 lb
Out	12/13/2022 09:57:02		galtheim		Tare	36540 lb
					Net	61740 lb
					Tons	30.87

Comments WYUSER-GA

	Product	LD%	Qty	UOM	Rate	Tax	Amount	Origin
1	Daily Cover-PCS-Tons-Pet	100	30.87	Tons				SNOHOMISH
2	EVF-P-Standard Environme	100		%				SNOHOMISH
3	FUELSUR-FUEL SURCHARGE	100		%				SNOHOMISH
4	GONDOLA T-GONDOLA TON	100	30.87	Tons				SNOHOMISH

Total Tax
Total Ticket

Driver`s Signature

WASTE MANAGEMENT

Alaska Street
70 S Alaska Street
Seattle, WA, 98134

Original
Ticket# 181885

Ph: 206 763 5025

Customer Name WYSER CONSTRUCTION WYSER CONS
Ticket Date 12/13/2022
Payment Type Credit Account
Manual Ticket#
Route AK
Hauling Ticket#
Destination
PO# SW-22-1672/117650WA

Carrier SELF HAULER *
Vehicle# W-40T
Container
Driver KURTIS
Check#
Billing# 0000188
Grid

Volume

	Time	Scale	Operator	Inbound		
In	12/13/2022 13:02:03	SCALE 1	galtheim		Gross	95780 lb
Out	12/13/2022 13:02:03		galtheim		Tare	36540 lb
					Net	59240 lb
					Tons	29.62

Comments WYSER-GA

Provided to Builders Exchange of WA, Inc. For usage Conditions Agreement see www.bxwa.com - Always Verify Scal

Product LD% Qty UOM Rate Tax Amount Origin

WYSER INC
CONSTRUCTION

EXPORT MATERIALS LOG

City of Stanwood - Sebranke Property Cleanup
SW-225-1672

DATE: January 3, 2023

LOAD NO.	TRUCKING COMPANY	MANIFEST #	DUMP TIME	ESTIMATED QUANTITY	LOCATION	DATE	TYPE OF MATERIALS	TONNAGE SLIPS
1	Wyser Construction	5193/182266	9:56 AM	33.89 ton	Waste Management	1/3/2023	Class 3 Soil	33.89
2								
3								
4								
5								
6								
7								
8								
9								
10								
11								
12								
13								
14								
15								
16								
17								
18								
19								
20								
21					Class	3 Soil	Total Tons	33.89
22								
23								

Provided to Builders Exchange of WA, Inc. For usage Conditions Agreement see www.bxwa.com - Always Verify Scal

WASTE MANAGEMENT

Alaska Street
70 S Alaska Street
Seattle, WA, 98134

Original
Ticket# 182266

Ph: 206 763 5025

Customer Name WYSER CONSTRUCTION WYSER CONS
Ticket Date 01/03/2023
Payment Type Credit Account
Manual Ticket#
Route AK
Hauling Ticket#
Destination
PO# SW-22-1672/117650WA

Carrier SELF HAULER *
Vehicle# W-40T
Container
Driver KURTIS
Check#
Billing# 0000188
Grid

Volume

	Time	Scale	Operator	Inbound
In	01/03/2023 09:56:36	SCALE 1	galtheim	
Out	01/03/2023 09:56:36		galtheim	

Gross	104320 lb
Tare	36540 lb
Net	67780 lb
Tons	33.89

Comments WYSER-GA

	Product	LD%	Qty	UOM	Rate	Tax	Amount	Origin
1	Daily Cover-PCS-Tons-Pet	100	33.89	Tons				SNOHOMISH
2	EVF-P-Standard Environme	100		%				
3	FUELSUR-FUEL SURCHARGE	100		%				
4	GONDOLA T-GONDOLA TON	100	33.89	Tons				

Total Tax
Total Ticket

Driver's Signature

Provided to Builders Exchange of WA, Inc. For usage Conditions Agreement see www.bxwa.com - Always Verify Scal

APPENDIX G
PRODUCT DOCUMENTATION



Provided to Builders Exchange of WA, Inc. For usage Conditions Agreement see www.bxwa.com - Always Verify Scal

REGENESIS
Technology-Based Solutions for the Environment

SAFETY DATA SHEET

1. Identification

Product identifier **Oxygen Release Compound Advanced (ORC Advanced®)**

Other means of identification None.

Recommended use Soil and Groundwater Remediation.

Recommended restrictions None known.

Manufacturer/Importer/Supplier/Distributor information

Company Name Regenesis

Address 1011 Calle Sombra
San Clemente, CA 92673

Telephone 949-366-8000

E-mail CustomerService@regenesis.com

Emergency phone number CHEMTREC® at 1-800-424-9300 (International)

2. Hazard(s) identification

Physical hazards	Oxidizing solids	Category 2
Health hazards	Skin corrosion/irritation	Category 1
	Serious eye damage/eye irritation	Category 1

OSHA defined hazards Not classified.

Label elements



Signal word Danger

Hazard statement May intensify fire; oxidizer. Causes skin irritation. Causes serious eye damage.

Precautionary statement

Prevention Keep away from heat. Keep/Store away from clothing and other combustible materials. Take any precaution to avoid mixing with combustibles. Wash thoroughly after handling. Wear protective gloves/eye protection/face protection.

Response If on skin: Wash with plenty of water. If in eyes: Rinse cautiously with water for several minutes. Remove contact lenses, if present and easy to do. Continue rinsing. Immediately call a poison center/doctor. If skin irritation occurs: Get medical advice/attention. Take off contaminated clothing and wash before reuse. In case of fire: Use appropriate media to extinguish.

Storage Store away from incompatible materials.

Disposal Dispose of contents/container in accordance with local/regional/national/international regulations.

Hazard(s) not otherwise classified (HNOC) None known.

3. Composition/information on ingredients

Mixtures

Chemical name	CAS number	%
Calcium hydroxide oxide	682334-66-3	≥85
Calcium hydroxide	1305-62-0	≤15
Dipotassium Phosphate	7758-11-4	<5
Monopotassium Phosphate	7778-77-0	<5

Composition comments All concentrations are in percent by weight unless otherwise indicated.

Provided to Builders Exchange of WA, Inc. For usage Conditions Agreement see www.bxwa.com - Always Verify Scal

4. First-aid measures

Inhalation	Move to fresh air. Call a physician if symptoms develop or persist.
Skin contact	IF ON CLOTHING: rinse immediately contaminated clothing and skin with plenty of water before removing clothes. Rinse skin with water/shower. If skin irritation occurs: Get medical advice/attention. Wash contaminated clothing before reuse.
Eye contact	Do not rub eyes. Immediately flush eyes with plenty of water for at least 15 minutes. Remove contact lenses, if present and easy to do. Continue rinsing. Get medical attention immediately.
Ingestion	Never give anything by mouth to a victim who is unconscious or is having convulsions. Rinse mouth. Do not induce vomiting. If vomiting occurs, keep head low so that stomach content doesn't get into the lungs. Get medical attention if symptoms occur.
Most important symptoms/effects, acute and delayed	Severe eye irritation. Symptoms may include stinging, tearing, redness, swelling, and blurred vision. Permanent eye damage including blindness could result. Dusts may irritate the respiratory tract, skin and eyes. Skin irritation. May cause redness and pain.
Indication of immediate medical attention and special treatment needed	Provide general supportive measures and treat symptomatically. Keep victim under observation. Symptoms may be delayed.
General information	Take off all contaminated clothing immediately. Contact with combustible material may cause fire. Ensure that medical personnel are aware of the material(s) involved, and take precautions to protect themselves. Wash contaminated clothing before reuse.

5. Fire-fighting measures

Suitable extinguishing media	Water spray, fog (flooding amounts). Foam. Dry chemical powder. Carbon dioxide (CO2).
Unsuitable extinguishing media	None known.
Specific hazards arising from the chemical	Greatly increases the burning rate of combustible materials. Containers may explode when heated. During fire, gases hazardous to health may be formed. Combustion products may include: metal oxides.
Special protective equipment and precautions for firefighters	Self-contained breathing apparatus and full protective clothing must be worn in case of fire.
Fire fighting equipment/instructions	In case of fire and/or explosion do not breathe fumes. Move containers from fire area if you can do so without risk. Use water spray to cool unopened containers.
Specific methods	Cool containers exposed to flames with water until well after the fire is out.
General fire hazards	May intensify fire; oxidizer. Contact with combustible material may cause fire.

6. Accidental release measures

Personal precautions, protective equipment and emergency procedures	Keep unnecessary personnel away. Keep people away from and upwind of spill/leak. Keep away from clothing and other combustible materials. Wear appropriate protective equipment and clothing during clean-up. Use a NIOSH/MSHA approved respirator if there is a risk of exposure to dust/fume at levels exceeding the exposure limits. Do not touch damaged containers or spilled material unless wearing appropriate protective clothing. Ensure adequate ventilation. Local authorities should be advised if significant spillages cannot be contained. For personal protection, see section 8 of the SDS.
Methods and materials for containment and cleaning up	Eliminate all ignition sources (no smoking, flares, sparks, or flames in immediate area). Collect dust using a vacuum cleaner equipped with HEPA filter. Keep combustibles (wood, paper, oil, etc.) away from spilled material. Ventilate the contaminated area. Stop the flow of material, if this is without risk. Absorb in vermiculite, dry sand or earth and place into containers. Large Spills: Sweep up or vacuum up spillage and collect in suitable container for disposal. Shovel the material into waste container. Minimize dust generation and accumulation. Avoid the generation of dusts during clean-up. Following product recovery, flush area with water. Small Spills: Wipe up with absorbent material (e.g. cloth, fleece). Clean surface thoroughly to remove residual contamination. Never return spills to original containers for re-use. Place all material into loosely covered plastic containers for later disposal. For waste disposal, see section 13 of the SDS. Wear appropriate protective equipment and clothing during clean-up.
Environmental precautions	Avoid discharge into drains, water courses or onto the ground.

Provided to Builders Exchange of WA, Inc. For usage Conditions Agreement see www.bxwa.com - Always Verify Scal

7. Handling and storage

Precautions for safe handling

Minimize dust generation and accumulation. Routine housekeeping should be instituted to ensure that dusts do not accumulate on surfaces. Keep away from heat. Provide appropriate exhaust ventilation at places where dust is formed. Keep away from clothing and other combustible materials. Take any precaution to avoid mixing with combustibles. Avoid contact with water and moisture. Do not get this material in contact with eyes. Avoid contact with eyes, skin, and clothing. Avoid prolonged exposure. Wear appropriate personal protective equipment. Observe good industrial hygiene practices.

Conditions for safe storage, including any incompatibilities

Keep away from heat. Store in a cool, dry place out of direct sunlight. Store in original tightly closed container. Store in a well-ventilated place. Do not store near combustible materials. Store away from incompatible materials (see Section 10 of the SDS).

8. Exposure controls/personal protection

Occupational exposure limits

US. OSHA Table Z-1 Limits for Air Contaminants (29 CFR 1910.1000)

Components	Type	Value	Form
Calcium hydroxide (CAS 1305-62-0)	PEL	5 mg/m3	Respirable fraction.
		15 mg/m3	Total dust.

US. ACGIH Threshold Limit Values

Components	Type	Value
Calcium hydroxide (CAS 1305-62-0)	TWA	5 mg/m3

US. NIOSH: Pocket Guide to Chemical Hazards

Components	Type	Value
Calcium hydroxide (CAS 1305-62-0)	TWA	5 mg/m3

Biological limit values

No biological exposure limits noted for the ingredient(s).

Appropriate engineering controls

Good general ventilation (typically 10 air changes per hour) should be used. Ventilation rates should be matched to conditions. If applicable, use process enclosures, local exhaust ventilation, or other engineering controls to maintain airborne levels below recommended exposure limits. If exposure limits have not been established, maintain airborne levels to an acceptable level. If engineering measures are not sufficient to maintain concentrations of dust particulates below the Occupational Exposure Limit (OEL), suitable respiratory protection must be worn. If material is ground, cut, or used in any operation which may generate dusts, use appropriate local exhaust ventilation to keep exposures below the recommended exposure limits. Eye wash facilities and emergency shower must be available when handling this product.

Individual protection measures, such as personal protective equipment

Eye/face protection

Use dust-tight, unvented chemical safety goggles when there is potential for eye contact.

Skin protection

Hand protection

Wear appropriate chemical resistant gloves. Frequent change is advisable. Recommended gloves include rubber, neoprene, nitrile or viton.

Other

Wear appropriate chemical resistant clothing.

Respiratory protection

If engineering controls do not maintain airborne concentrations below recommended exposure limits (where applicable) or to an acceptable level (in countries where exposure limits have not been established), an approved respirator must be worn. Recommended use: Wear respirator with dust filter.

Thermal hazards

Wear appropriate thermal protective clothing, when necessary.

General hygiene considerations

Keep from contact with clothing and other combustible materials. Remove and wash contaminated clothing promptly. Always observe good personal hygiene measures, such as washing after handling the material and before eating, drinking, and/or smoking. Routinely wash work clothing and protective equipment to remove contaminants.

9. Physical and chemical properties

Appearance

Physical state

Solid.

Form

Powder.

Color

White to pale yellow.

Provided to Builders Exchange of WA, Inc. For usage Conditions Agreement see www.bxwa.com - Always Verify Scal

Odor	Odorless.
Odor threshold	Not available.
pH	12.5 (3% suspension/water)
Melting point/freezing point	Not available.
Initial boiling point and boiling range	Not available.
Flash point	Not available.
Evaporation rate	Not available.
Flammability (solid, gas)	Oxidizer.
Upper/lower flammability or explosive limits	
Flammability limit - lower (%)	Not available.
Flammability limit - upper (%)	Not available.
Explosive limit - lower (%)	Not available.
Explosive limit - upper (%)	Not available.
Vapor pressure	Not available.
Vapor density	Not available.
Relative density	Not available.
Solubility(ies)	
Solubility (water)	Slightly soluble
Partition coefficient (n-octanol/water)	Not available.
Auto-ignition temperature	Not available.
Decomposition temperature	527 °F (275 °C)
Viscosity	Not available.
Other information	
Bulk density	0.5 - 0.9 g/ml
Explosive limit	Non-explosive.

10. Stability and reactivity

Reactivity	Greatly increases the burning rate of combustible materials.
Chemical stability	Decomposes on heating. Product may be unstable at temperatures above: 275°C/527°F.
Possibility of hazardous reactions	Reacts slowly with water.
Conditions to avoid	Heat. Moisture. Avoid temperatures exceeding the decomposition temperature. Contact with incompatible materials.
Incompatible materials	Acids. Bases. Salts of heavy metals. Reducing agents. Combustible material.
Hazardous decomposition products	Oxygen. Hydrogen peroxide (H_2O_2). Steam. Heat.

11. Toxicological information

Information on likely routes of exposure

Inhalation	Dust may irritate respiratory system. Prolonged inhalation may be harmful.
Skin contact	Causes skin irritation.
Eye contact	Causes serious eye damage.
Ingestion	Ingestion may cause irritation and malaise.
Symptoms related to the physical, chemical and toxicological characteristics	Severe eye irritation. Symptoms may include stinging, tearing, redness, swelling, and blurred vision. Permanent eye damage including blindness could result. Dusts may irritate the respiratory tract, skin and eyes. Skin irritation. May cause redness and pain.

Information on toxicological effects

Acute toxicity

Provided to Builders Exchange of WA, Inc. For usage Conditions Agreement see www.bxwa.com - Always Verify Scal

Components	Species	Test Results
Calcium hydroxide (CAS 1305-62-0)		
Acute		
Oral		
LD50	Rat	7340 mg/kg

Skin corrosion/irritation Causes skin irritation.

Serious eye damage/eye irritation Causes serious eye damage.

Respiratory or skin sensitization

Respiratory sensitization Not a respiratory sensitizer.

Skin sensitization This product is not expected to cause skin sensitization.

Germ cell mutagenicity No data available to indicate product or any components present at greater than 0.1% are mutagenic or genotoxic.

Carcinogenicity This product is not considered to be a carcinogen by IARC, ACGIH, NTP, or OSHA.

OSHA Specifically Regulated Substances (29 CFR 1910.1001-1050)

Not listed.

Reproductive toxicity This product is not expected to cause reproductive or developmental effects.

Specific target organ toxicity - single exposure Not classified.

Specific target organ toxicity - repeated exposure Not classified.

Aspiration hazard Due to the physical form of the product it is not expected to be an aspiration hazard.

Chronic effects Prolonged inhalation may be harmful.

12. Ecological information

Ecotoxicity The product is not classified as environmentally hazardous. However, this does not exclude the possibility that large or frequent spills can have a harmful or damaging effect on the environment.

Components		Species	Test Results
Calcium hydroxide (CAS 1305-62-0)			
Aquatic			
Fish	LC50	Zambezi barbel (Clarias gariepinus)	33.8844 mg/l, 96 hours

Persistence and degradability Decomposes in the presence of water. The product contains inorganic compounds which are not biodegradable.

Bioaccumulative potential The product does not contain any substances expected to be bioaccumulating.

Mobility in soil This substance has very low solubility in water and low mobility in the environment.

Other adverse effects None known.

13. Disposal considerations

Disposal instructions Collect and reclaim or dispose in sealed containers at licensed waste disposal site. Dispose of contents/container in accordance with local/regional/national/international regulations.

Local disposal regulations Dispose in accordance with all applicable regulations.

Hazardous waste code The waste code should be assigned in discussion between the user, the producer and the waste disposal company.

Waste from residues / unused products Dispose of in accordance with local regulations. Empty containers or liners may retain some product residues. This material and its container must be disposed of in a safe manner (see: Disposal instructions).

Contaminated packaging Empty containers should be taken to an approved waste handling site for recycling or disposal. Since emptied containers may retain product residue, follow label warnings even after container is emptied.

14. Transport information

DOT

UN number UN1479

UN proper shipping name Oxidizing solid, n.o.s. (Calcium hydroxide oxide)

Provided to Builders Exchange of WA, Inc. For usage Conditions Agreement see www.bxwa.com - Always Verify Scal

Transport hazard class(es)

Class	5.1
Subsidiary risk	-
Label(s)	5.1
Packing group	II
Environmental hazards	
Marine pollutant	No
Special precautions for user	Read safety instructions, SDS and emergency procedures before handling.
Special provisions	62, IB8, IP2, IP4, T3, TP33
Packaging exceptions	152
Packaging non bulk	212
Packaging bulk	240

IATA

UN number	UN1479
UN proper shipping name	Oxidizing solid, n.o.s. (Calcium hydroxide oxide)
Transport hazard class(es)	
Class	5.1
Subsidiary risk	-
Packing group	II
Environmental hazards	No
ERG Code	5L
Special precautions for user	Read safety instructions, SDS and emergency procedures before handling.

IMDG

UN number	UN1479
UN proper shipping name	OXIDIZING SOLID, N.O.S. (Calcium hydroxide oxide)
Transport hazard class(es)	
Class	5.1
Subsidiary risk	-
Packing group	II
Environmental hazards	
Marine pollutant	No
EmS	F-A, S-Q
Special precautions for user	Read safety instructions, SDS and emergency procedures before handling.

Transport in bulk according to Annex II of MARPOL 73/78 and the IBC Code Not applicable.

15. Regulatory information

US federal regulations This product is a "Hazardous Chemical" as defined by the OSHA Hazard Communication Standard, 29 CFR 1910.1200.
All components are on the U.S. EPA TSCA Inventory List.

TSCA Section 12(b) Export Notification (40 CFR 707, Subpt. D)

Not regulated.

OSHA Specifically Regulated Substances (29 CFR 1910.1001-1050)

Not listed.

CERCLA Hazardous Substance List (40 CFR 302.4)

Not listed.

Superfund Amendments and Reauthorization Act of 1986 (SARA)

Hazard categories Immediate Hazard - Yes
Delayed Hazard - No
Fire Hazard - Yes
Pressure Hazard - No
Reactivity Hazard - Yes

SARA 302 Extremely hazardous substance

Not listed.

SARA 311/312 Hazardous chemical Yes

Provided to Builders Exchange of WA, Inc. For usage Conditions Agreement see www.bxwa.com - Always Verify Scal

SARA 313 (TRI reporting)

Not regulated.

Other federal regulations

Clean Air Act (CAA) Section 112 Hazardous Air Pollutants (HAPs) List

Not regulated.

Clean Air Act (CAA) Section 112(r) Accidental Release Prevention (40 CFR 68.130)

Not regulated.

Safe Drinking Water Act (SDWA) Not regulated.

US state regulations

US. Massachusetts RTK - Substance List

Calcium hydroxide (CAS 1305-62-0)

US. New Jersey Worker and Community Right-to-Know Act

Calcium hydroxide (CAS 1305-62-0)
Calcium hydroxide oxide (CAS 682334-66-3)

US. Pennsylvania Worker and Community Right-to-Know Law

Calcium hydroxide (CAS 1305-62-0)

US. Rhode Island RTK

Not regulated.

US. California Proposition 65

California Safe Drinking Water and Toxic Enforcement Act of 1986 (Proposition 65): This material is not known to contain any chemicals currently listed as carcinogens or reproductive toxins.

International Inventories

Country(s) or region	Inventory name	On inventory (yes/no)*
Australia	Australian Inventory of Chemical Substances (AICS)	Yes
Canada	Domestic Substances List (DSL)	Yes
Canada	Non-Domestic Substances List (NDSL)	No
China	Inventory of Existing Chemical Substances in China (IECSC)	Yes
Europe	European Inventory of Existing Commercial Chemical Substances (EINECS)	Yes
Europe	European List of Notified Chemical Substances (ELINCS)	No
Japan	Inventory of Existing and New Chemical Substances (ENCS)	Yes
Korea	Existing Chemicals List (ECL)	Yes
New Zealand	New Zealand Inventory	Yes
Philippines	Philippine Inventory of Chemicals and Chemical Substances (PICCS)	Yes
United States & Puerto Rico	Toxic Substances Control Act (TSCA) Inventory	Yes

*A "Yes" indicates this product complies with the inventory requirements administered by the governing country(s).
A "No" indicates that one or more components of the product are not listed or exempt from listing on the inventory administered by the governing country(s).

16. Other information, including date of preparation or last revision

Issue date 02-April-2015

Revision date -

Version # 01

Further information HMIS® is a registered trade and service mark of the American Coatings Association (ACA).

HMIS® ratings Health: 3
Flammability: 0
Physical hazard: 2

NFPA ratings



Provided to Builders Exchange of WA, Inc. For usage Conditions Agreement see www.bxwa.com - Always Verify Scal

Disclaimer

Regenesis cannot anticipate all conditions under which this information and its product, or the products of other manufacturers in combination with its product, may be used. It is the user's responsibility to ensure safe conditions for handling, storage and disposal of the product, and to assume liability for loss, injury, damage or expense due to improper use. The information in the sheet was written based on the best knowledge and experience currently available.

Provided to Builders Exchange of WA, Inc. For usage Conditions Agreement see www.bxwa.com - Always Verify Scal

ORC Advanced® Technical Description

ORC Advanced® is an engineered, oxygen release compound designed specifically for enhanced, *in situ* aerobic bioremediation of petroleum hydrocarbons in groundwater and saturated soils. Upon contact with groundwater, this calcium oxyhydroxide-based material becomes hydrated producing a controlled release of molecular oxygen (17% by weight) for periods of up to 12 months on a single application.



Example of ORC Advanced

ORC Advanced decreases time to site closure and accelerates degradation rates up to 100 times faster than natural degradation rates. A single ORC Advanced application can support aerobic biodegradation for up to 12 months with minimal site disturbance, no permanent or emplaced above ground equipment, piping, tanks, power sources, etc are needed. There is no operation or maintenance required. ORC Advanced provides lower costs, greater efficiency and reliability compared to engineered mechanical systems, oxygen emitters and bubblers.

ORC Advanced provides remediation practitioners with a significantly faster and highly effective means of treating petroleum contaminated sites. Petroleum hydrocarbon contamination is often associated with retail petroleum service stations resulting from leaking underground storage tanks, piping and dispensers. As a result, ORC Advanced technology and applications have been tailored around the remediation needs of the retail petroleum industry and include: tank pit excavations, amending and mixing with backfill, direct-injection, bore-hole backfill, ORC Advanced Pellets for waterless and dustless application, combined ISCO and bioremediation applications, etc.

For a list of treatable contaminants with the use of ORC Advanced, view the Range of Treatable Contaminants Guide

Chemical Composition

- Calcium hydroxide oxide
- Calcium hydroxide
- Monopotassium phosphate
- Dipotassium phosphate

Properties

- Physical state: Solid
- Form: Powder
- Odor: Odorless
- Color: White to pale yellow
- pH: 12.5 (3% suspension/water)

Provided to Builders Exchange of WA, Inc. For usage Conditions Agreement see www.bxwa.com - Always Verify Scal

OXYGEN RELEASE COMPOUND

ORC Advanced® Technical Description

Storage and Handling Guidelines

Storage
Store in a cool, dry place out of direct sunlight
Store in original tightly closed container
Store in a well-ventilated place
Do not store near combustible materials
Store away from incompatible materials
Provide appropriate exhaust ventilation in places where dust is formed

Handling
Minimize dust generation and accumulation
Keep away from heat
Routine housekeeping should be instituted to ensure that dust does not accumulate on surfaces
Observe good industrial hygiene practices
Take precaution to avoid mixing with combustibles
Keep away from clothing and other combustible materials
Avoid contact with water and moisture
Avoid contact with eyes, skin, and clothing
Avoid prolonged exposure
Wear appropriate personal protective equipment

Applications

- Slurry mixture direct-push injection through hollow rods or direct-placement into boreholes
- *In situ* or *ex situ* slurry mixture into contaminated backfill or contaminated soils in general
- Slurry mixture injections in conjunction with chemical oxidants like RegenOx or PersulfOx
- Filter sock applications in groundwater for highly localized treatment
- *Ex situ* biopiles

Health and Safety

Wash thoroughly after handling. Wear protective gloves, eye protection, and face protection. Please review the ORC Advanced Safety Data Sheet for additional storage, usage, and handling requirements.

REGENESIS®

www.regenesis.com
1011 Calle Sombra, San Clemente CA 92673
949.366.8000

©2016 All rights reserved. REGENESIS and ORC Advanced® are registered trademarks of REGENESIS Bioremediation Products. All other trademarks are the property of their respective owners.

Provided to Builders Exchange of WA, Inc. For usage Conditions Agreement see www.bxwa.com - Always Verify Scal

APPENDIX H

BACKFILL DOCUMENTATION



Provided to Builders Exchange of WA, Inc. For usage Conditions Agreement see www.bxwa.com - Always Verify Scal

WYSER INC
CONSTRUCTION

IMPORT MATERIALS LOG

City of Stanwood - Sebranke Property Cleanup
SW-22-1672

DATE: December 8, 2022

LOAD NO.	TRUCKING COMPANY	MANIFEST #	LOAD TIME	ESTIMATED QUANTITY	LOCATION	DATE	TYPE OF MATERIALS	TONNAGE SLIPS
1	Wyser Construction	5186/537951	7:22 AM	12.16 CY	Lenz Enterprises	12/8/2022	Gravel Borrow	12.16 cy
2								
3	Stanwood Redi-Mix	208806	1:20 PM	6.0 CY	Stanwood Redi-Mix	12/8/2022	CDF	6.0 cy
4								
5								
6								
7								
8								
9								
10								
11								
12								
13								
14								
15								
16								
17								
18					Gravel	Borrow	Total Yards	12.16
19						CDF	Total Yards	6.0 cy
20								
21								
22								

Provided to Builders Exchange of WA, Inc. For usage Conditions Agreement see www.bxwa.com - Always Verify Scal

Lenz Enterprises, Inc.
P.O. Box 868
Stanwood, WA 98292
(360) 629-2933

GREEN BLENZ COMPOST

Ticket No.: **537951**

Date : 12/8/2022 Time: 7:22:45AM

Location : **Lenz Stanwood**

Customer : PICKEDUP Driver is responsible for material quantity

Order :

P.O. :

Product : 22Y Pit Run (Gravel Borrow) (Yard) **12.16** Cubic Yard

Seal.ID:

Notes:

Notes:

Carrier : WYSER Wyser Construction

Vehicle : W40TT W40TT

Received : _____

COPY 1 CUSTOMER

	Pounds	Tons
Gross	76220	38.1
Tare	43400	21.70
Net	32820	16.41

Price			
Freight			
Other			
Tax			
Total			
Today:	12.16	Loads:	1

Weighmaster: Melissa

Provided to Builders Exchange of WA, Inc. For usage Conditions Agreement see www.bxwa.com - Always Verify Scal

STANWOOD REDI-MIX, INC.
BOX 69
SILVANA, WA 98287
PHONE: (360) 652-7777
FAX: (360) 652-5685

TICKET 208806

SOLD TO CASH
2431 LARSON RD
STANWOOD

kimmie@stanwoodredi-mix.com

DELIVERED TO
8627 271ST ST NW
STANWOOD
PREPAID GO AFTER AUTH

PLANT NO	DATE	CUSTOMER NO	JOB NO	PUMP COMPANY
1	2022-12-08	CASH	WYSER 120822	

TRUCK NO	PURCHASE ORDER NO	DRIVER NAME	PRECEDING TRUCK	TRIP NO
97	ANDREW HINTON	LOGAN C		1

QUANTITY YD3	SHIPPED YD3	ORDERED YD3	USAGE	Exp Class	SLUMP in.	AEA %
6.00	6.00	6.00	FILL	0	6.00	10.0

PRODUCT CODE	MIX DESCRIPTION
10400C	Control Density Fill

WEIGHMASTER	MAX JOB-SITE WATER	STANDBY min/YD3
SRM Batch		

SCH. ARR. TIME	13:20:00
BATCH TIME	12:53 PM
LEFT PLANT	12:59 PM
ARRIVED JOB	
START POUR	
END POUR	
LEFT JOB	
ARRIVED PLANT	

PRODUCT ID	QUANTITY	PRODUCT DESCRIPTION	UNIT PRICE	EXTENDED
10400C	6.00	Control Density Fill		
1044	6.00	Environmental Compliance Charge		
	1.00	Fuel Surcharge Fee (per Ld)		

JOB SITE WATER	BEGIN REVS	LEFTOVERS YD3	PUMP BLOW-BACK	JOB COMPLETE
0	0	0		

SUB TOTAL	
SALES TAX	
TOTAL PRICE	
CUMULATED TOTAL	

SITE CONDITION

With my signature below, I acknowledge receipt of concrete, extra products, health hazards, and other information contained in this ticket.

Provided to Builders Exchange of WA, Inc. For usage Conditions Agreement see www.bxwa.com - Always Verify Scal

WYSER INC
CONSTRUCTION

IMPORT MATERIALS LOG

City of Stanwood - Sebranke Property Cleanup
SW-22-1672

DATE: December 12, 2022

LOAD NO.	TRUCKING COMPANY	MANIFEST #	LOAD TIME	ESTIMATED QUANTITY	LOCATION	DATE	TYPE OF MATERIALS	TONNAGE SLIPS
1	Wyser Construction	5188/538368	8:55 AM	11.93 CY	Lenz Enterprises	12/12/2022	Gravel Borrow	11.93 cy
2	Wyser Construction	5188/538369	8:55 AM	12.09 CY	Lenz Enterprises	12/12/2022	Gravel Borrow	12.09 cy
3	Wyser Construction	5188/538370	8:56 AM	12.45 CY	Lenz Enterprises	12/12/2022	Gravel Borrow	12.45 cy
4	Wyser Construction	5188/538384	9:17 AM	14.49 CY	Lenz Enterprises	12/12/2022	Gravel Borrow	14.49 cy
5	Wyser Construction	5188/538396	9:46 AM	12.63 CY	Lenz Enterprises	12/12/2022	Gravel Borrow	12.63 cy
6	Wyser Construction	5188/538405	10:08 AM	12.21 CY	Lenz Enterprises	12/12/2022	Gravel Borrow	12.21 cy
7	Wyser Construction	5188/538416	10:43 AM	12.43 CY	Lenz Enterprises	12/12/2022	Gravel Borrow	12.43 cy
8								
9								
10								
11								
12								
13								
14								
15								
16								
17								
18					Gravel	Borrow	Total Yards	88.23 cy
19								
20								
21								
22								

Provided to Builders Exchange of WA, Inc. For usage Conditions Agreement see www.bxwa.com - Always Verify Scal

Lenz Enterprises, Inc.
P.O. Box 868
Stanwood, WA 98292
(360) 629-2933

GREEN BLENZ COMPOST

Ticket No.: **538368**
Correction of 538345

Date : 12/12/2022 Time: 8:55:12AM
Location : **Lenz Stanwood**
Customer : 14257420898 Wyser Construction
Order :
P.O. :
Product : 22Y Pit Run (Gravel Borrow) (Yard) **11.93** Cubic Yard
Seal ID:
425 742 0898
Notes:
Notes:
Carrier : WYSER Wyser Construction
Vehicle : W40 W40 White Solo
Received : _____

	Pounds	Tons
Gross	61040 *	30.52*
Tare	28820 *	14.41*
Net	32220 *	16.1*

* Manual Weight

Price			
Freight			
Other			
Tax	NOTAX	0.0000	
Total		$	
Today:	11.93	Loads:	1

Weighmaster: Melissa

COPY 1 CUSTOMER

Lenz Enterprises, Inc.
P.O. Box 868
Stanwood, WA 98292
(360) 629-2933

GREEN BLENZ COMPOST

Ticket No.: **538369**
Correction of 538357

Date : 12/12/2022 Time: 8:55:47AM
Location : **Lenz Stanwood**
Customer : 14257420898 Wyser Construction
Order :
P.O. :
Product : 22Y Pit Run (Gravel Borrow) (Yard) **12.09** Cubic Yard
Seal ID:
425 742 0898

	Pounds	Tons
Gross	61460 *	30.73*
Tare	28820 *	14.41*
Net	32640 *	16.32*

* Manual Weight

Provided to Builders Exchange of WA, Inc. For usage Conditions Agreement see www.bxwa.com - Always Verify Scal

Lenz Enterprises, Inc.
P.O. Box 868
Stanwood, WA 98292
(360) 629-2933

GREEN BLENZ COMPOST

Ticket No.: **538370**
Correction of 538367

Date : 12/12/2022 Time: 8:56:05AM
Location : **Lenz Stanwood**
Customer : 14257420898 Wyser Construction
Order :
P.O. :
Product : 22Y Pit Run (Gravel Borrow) (Yard) **12.45** Cubic Yard
Seal.ID:
425 742 0898
Notes:
Notes:
Carrier : WYSER Wyser Construction
Vehicle : W40 W40 White Solo
Received : _____

	Pounds	Tons
Gross	62440 *	31.22*
Tare	28820 *	14.41*
Net	33620 *	16.81*

* Manual Weight

Price			
Freight			
Other			
Tax	NOTAX	0.0000	
Total		$	
Today:	36.47	Loads:	3

Weighmaster: Melissa

COPY 1 CUSTOMER

Lenz Enterprises, Inc.
P.O. Box 868
Stanwood, WA 98292
(360) 629-2933

GREEN BLENZ COMPOST

Ticket No.: **538384**

Date : 12/12/2022 Time: 9:17:44AM
Location : **Lenz Stanwood**
Customer : 14257420898 Wyser Construction
Order :
P.O. :
Product : 22Y Pit Run (Gravel Borrow) (Yard) **14.49** Cubic Yard
Seal.ID:
425 742 0898

	Pounds	Tons
Gross	67940	33.97
Tare	28820 *	14.41*
Net	39120	19.56

* P. T.

Price	
Freight	

Provided to PaperExchange of WA, Inc. For usage Conditions Agreement see www.pxwa.com - Always Verify Scal

Lenz Enterprises, Inc.
P.O. Box 868
Stanwood, WA 98292
(360) 629-2933

GREEN BLENZ COMPOST

Ticket No.: **538396**

Date : 12/12/2022 Time: 9:46:19AM
Location : **Lenz Stanwood**
Customer : 14257420898 Wyser Construction
Order :
P.O. :
Product : 22Y Pit Run (Gravel Borrow) (Yard)
Seal ID:
425 742 0898
Notes:
Notes:
Carrier : WYSER Wyser Construction
Vehicle : W40 W40 White Solo
Received : _____

	Pounds	Tons
Gross	62920	31.46
Tare	28820 *	14.41*
Net	34100	17.05

* P. T.

12.63 Cubic Yard

Price			
Freight			
Other			
Tax	NOTAX	0.0000	
Total		$	
Today:	63.59	Loads:	5

Weighmaster: Melissa

COPY 1 CUSTOMER

Lenz Enterprises, Inc.
P.O. Box 868
Stanwood, WA 98292
(360) 629-2933

GREEN BLENZ COMPOST

Ticket No.: **538405**

Date : 12/12/2022 Time: 10:08:55AM
Location : **Lenz Stanwood**
Customer : 14257420898 Wyser Construction
Order :
P.O. :
Product : 22Y Pit Run (Gravel Borrow) (Yard)
Seal ID:

	Pounds	Tons
Gross	61800	30.90
Tare	28820 *	14.41*
Net	32980	16.49

* P. T.

12.21 Cubic Yard

Price			

Provided to Builders Exchange of WA, Inc. For usage Conditions Agreement see www.bxwa.com - Always Verify Scal

Lenz Enterprises, Inc.
P.O. Box 868
Stanwood, WA 98292
(360) 629-2933

GREEN BLENZ COMPOST

Ticket No.: **538416**

Date : 12/12/2022 Time: 10:43:10AM

Location : **Lenz Stanwood**

Customer : 14257420898 Wyser Construction

Order :

P.O. :

Product : 22Y Pit Run (Gravel Borrow) (Yard) **12.43** Cubic Yard

Seal ID:
425 742 0898

Notes:

Notes:

Carrier : WYSER Wyser Construction

Vehicle : W40 W40 White Solo

Received : _____

	Pounds	Tons
Gross	62380	31.19
Tare	28820 *	14.41*
Net	33560	16.78

* P. T.

Price			
Freight			
Other			
Tax	NOTAX 0.0000		
Total		$	
Today:	88.23	Loads:	7

Weighmaster: Melissa

COPY 1 CUSTOMER

Provided to Builders Exchange of WA, Inc. For usage Conditions Agreement see www.bxwa.com - Always Verify Scal

WYSER INC CONSTRUCTION

IMPORT MATERIALS LOG

City of Stanwood - Sebranke Property Cleanup **DATE: December 16, 2022**
SW-22-1672

LOAD NO.	TRUCKING COMPANY	MANIFEST #	LOAD TIME	ESTIMATED QUANTITY	LOCATION	DATE	TYPE OF MATERIALS	TONNAGE SLIPS	
1	Wyser Construction	5192/539413	7:32 AM	7.35 ton	Lenz Enterprises	12/16/2022	2" x 4"	7.35	7.35
2	Wyser Construction	5192/539450	7:45 AM	17.14 ton	Lenz Enterprises	12/16/2022	Gravel Borrow	17.14	
3	Wyser Construction	5192/539451	8:00 AM	15.12 ton	Lenz Enterprises	12/16/2022	Gravel Borrow	15.12	
4	Wyser Construction	5192/539452	8:15 AM	16.49 ton	Lenz Enterprises	12/16/2022	Gravel Borrow	16.49	
5	Wyser Construction	5192/539459	8:35 AM	15.86 ton	Lenz Enterprises	12/16/2022	Gravel Borrow	15.86	64.61
6	Wyser Construction	5192/539466	9:20 AM	15.09 ton	Lenz Enterprises	12/16/2022	Turf Mix	15.09	
7	Wyser Construction	5192/539472	9:37 AM	15.16 ton	Lenz Enterprises	12/16/2022	Turf Mix	15.16	
8	Wyser Construction	5192/539482	9:58 AM	15.26 ton	Lenz Enterprises	12/16/2022	Turf Mix	15.26	45.51
9									
10									
11									
12									
13									
14									
15									
16									
17						2" x 4"	Total Tons	7.35	
18					Gravel	Borrow	Total Tons	64.61	
19						Turf Mix	Total Tons	45.51	
20									
21									
22									

Provided to Builders Exchange of WA, Inc. For usage Conditions Agreement see www.bxwa.com - Always Verify Scal

Lenz Enterprises, Inc.
P.O. Box 868
Stanwood, WA 98292
(360) 629-2933

GREEN BLENZ COMPOST

Ticket No.: **539413**

Date : 12/16/2022 Time: 7:32:13AM
Location : **Lenz Stanwood**
Customer : WYSER Wyser Construction Inc.
Order :
P.O. :
Product : 05 2x4 **7.35** Ton
Seal ID:
425-742-0898
Notes:
Notes:
Carrier : WYSER Wyser Construction
Vehicle : W40 W40 White Solo
Received : _____

	Pounds	Tons
Gross	43240	21.62
Tare	28540	14.27
Net	14700	7.35

Price		20.35	149.57
Freight		0.00	0.00
Other		0.00	0.00
Tax	NOTAX	0.0000	0.00
Total		$	149.57
Today:	7.35	Loads:	1

Weighmaster: Melissa

COPY 1 CUSTOMER

Provided to Builders Exchange of WA, Inc. For usage Conditions Agreement see www.bxwa.com - Always Verify Scal

Lenz Enterprises, Inc.
P.O. Box 868
Stanwood, WA 98292
(360) 629-2933

GREEN BLENZ COMPOST

Ticket No.: **539450**
Correction of 539438

Date : 12/16/2022 Time: 8:35:40AM
Location : **Lenz Stanwood**
Customer : WYSER Wyser Construction Inc.
Order :
P.O. :
Product : 22 Pit Run (Gravel Borrow) **17.14** Ton
Seal.ID:
425-742-0898
Notes:
Notes:
Carrier : WYSER Wyser Construction
Vehicle : W40 W40 White Solo
Received : _____

COPY 1 CUSTOMER

	Pounds	Tons
Gross	62820 *	31.41*
Tare	28540 *	14.27 *
Net	34280 *	17.14 *

* Manual Weight

Price		11.25	192.83
Freight		0.00	0.00
Other		0.00	0.00
Tax	NOTAX	0.0000	0.00
Total		$	192.83
Today:	17.14	Loads:	1

Weighmaster: Melissa

Lenz Enterprises, Inc.
P.O. Box 868
Stanwood, WA 98292
(360) 629-2933

GREEN BLENZ COMPOST

Ticket No.: **539451**
Correction of 539422

Date : 12/16/2022 Time: 8:36:00AM
Location : **Lenz Stanwood**
Customer : WYSER Wyser Construction Inc.
Order :
P.O. :
Product : 22 Pit Run (Gravel Borrow) **15.12** Ton
Seal.ID:
425-742-0898
Notes:
Notes:

	Pounds	Tons
Gross	58780 *	29.39*
Tare	28540 *	14.27 *
Net	30240 *	15.12 *

* Manual Weight

Price		11.25	170.10
Freight		0.00	0.00
Other		0.00	0.00
Tax	NOTAX	0.0000	0.00

Provided to Builders Exchange of WA, Inc. For usage Conditions Agreement see www.bxwa.com - Always Verify Scal

Lenz Enterprises, Inc.
P.O. Box 868
Stanwood, WA 98292
(360) 629-2933

GREEN BLENZ COMPOST

Ticket No.: **539452**
Correction of 539449

Date : 12/16/2022 Time: 8:36:15AM
Location : **Lenz Stanwood**
Customer : WYSER Wyser Construction Inc.
Order :
P.O. :
Product : 22 Pit Run (Gravel Borrow) **16.49** Ton
Seal.ID:
425-742-0898
Notes:
Notes:
Carrier : WYSER Wyser Construction
Vehicle : W40 W40 White Solo
Received : _____

COPY 1 CUSTOMER

	Pounds	Tons
Gross	61520 *	30.76 *
Tare	28540 *	14.27 *
Net	32980 *	16.49 *

* Manual Weight

Price		11.25	185.51
Freight		0.00	0.00
Other		0.00	0.00
Tax	NOTAX	0.0000	0.00
Total		$	185.51
Today.	48.75	Loads:	3

Weighmaster: Melissa

Lenz Enterprises, Inc.
P.O. Box 868
Stanwood, WA 98292
(360) 629-2933

GREEN BLENZ COMPOST

Ticket No.: **539459**

Date : 12/16/2022 Time: 8:56:31AM
Location : **Lenz Stanwood**
Customer : WYSER Wyser Construction Inc.
Order :
P.O. :
Product : 22 Pit Run (Gravel Borrow) **15.86** Ton
Seal.ID:
425-742-0898
Notes:
Notes:

	Pounds	Tons
Gross	60260	30.13
Tare	28540 *	14.27 *
Net	31720	15.86

* P. T.

Price		11.25	178.43
Freight		0.00	0.00
Other		0.00	0.00
Tax	NOTAX	0.0000	0.00
Total		$	178.43

Provided to Builders Exchange of WA, Inc. For usage Conditions Agreement see www.bxwa.com - Always Verify Scal

Lenz Enterprises, Inc.
P.O. Box 868
Stanwood, WA 98292
(360) 629-2933

GREEN BLENZ COMPOST

Ticket No.: **539466**

Date : 12/16/2022 Time: 9:20:31AM
Location : **Lenz Stanwood**
Customer : WYSER Wyser Construction Inc.
Order :
P.O. :
Product : 31 Premium Turf Mix
Seal.ID:
425-742-0898
Notes:
Notes:
Carrier : WYSER Wyser Construction
Vehicle : W40 W40 White Solo
Received : _____

	Pounds	Tons
Gross	58720	29.36
Tare	28540 *	14.27 *
Net	30180	15.09

* P. T.

15.09 Cubic Yard

Price		20.40	307.84
Freight		0.00	0.00
Other		0.00	0.00
Tax	NOTAX	0.0000	0.00
Total		$	307.84
Today:	15.09	Loads:	1

Weighmaster: Melissa

COPY 1 CUSTOMER

Lenz Enterprises, Inc.
P.O. Box 868
Stanwood, WA 98292
(360) 629-2933

GREEN BLENZ COMPOST

Ticket No.: **539472**

Date : 12/16/2022 Time: 9:37:44AM
Location : **Lenz Stanwood**
Customer : WYSER Wyser Construction Inc.
Order :
P.O. :
Product : 31 Premium Turf Mix
Seal.ID:
425-742-0898
Notes:
Notes:
Carrier : WYSER Wyser Construction
Vehicle : W40 W40 White Solo
Received : _____

	Pounds	Tons
Gross	58860	29.43
Tare	28540 *	14.27 *
Net	30320	15.16

* P. T.

15.16 Cubic Yard

Price		20.40	309.26
Freight		0.00	0.00
Other		0.00	0.00
Tax	NOTAX	0.0000	0.00
Total		$	309.26
Today:	30.25	Loads:	2

Weighmaster: Melissa

COPY 1 CUSTOMER

Lenz Enterprises, Inc.
P.O. Box 868
Stanwood, WA 98292
(360) 629-2933

GREEN BLENZ COMPOST

Ticket No.: **539482**

Provided by Document Exchange of WA, Inc. For usage Conditions Agreement see www.bxwa.com - All rights reserved

WYSER INC CONSTRUCTION

IMPORT MATERIALS LOG

City of Stanwood - Sebranke Property Cleanup
SW-22-1672

DATE: January 3, 2023

LOAD NO.	TRUCKING COMPANY	MANIFEST #	LOAD TIME	ESTIMATED QUANTITY	LOCATION	DATE	TYPE OF MATERIALS	TONNAGE SLIPS	
1	Wyser Construction	5193/540428	12:15 PM	15.37 ton	Lenz Enterprises	1/3/2023	Gravel Borrow	15.37	15.37
2	Wyser Construction	5193/540433	12:34 PM	15.50 CY	Lenz Enterprises	1/3/2023	Premium Turf Mix	15.50 cy	15.50 cy
3									
4									
5									
6									
7									
8									
9									
10									
11									
12									
13									
14									
15									
16									
17									
18					Gravel	Borrow	Total Tons	15.37	
19					Premium	Turf Mix	Total Yards	15.50 cy	
20									
21									
22									

Provided to Builders Exchange of WA, Inc. For usage Conditions Agreement see www.bxwa.com - Always Verify Scal

Lenz Enterprises, Inc.
P.O. Box 868
Stanwood, WA 98292
(360) 629-2933

GREEN BLENZ COMPOST

Ticket No.: **540428**

Date : 1/3/2023 Time: 12:15:25PM
Location : **Lenz Stanwood**
Customer : WYSER Wyser Construction Inc.
Order :
P.O. : 1672
Product : 22 Pit Run (Gravel Borrow)
Seal.ID:
425-742-0898
Notes:
Notes:
Carrier : WYSER Wyser Construction
Vehicle : W40 W40 White Solo
Received : _____

	Pounds	Tons
Gross	59420	29.71
Tare	28680	14.34
Net	30740	15.37

15.37 Ton

Price		13.25	203.65
Freight		0.00	0.00
Other		0.00	0.00
Tax	NOTAX	0.0000	0.00
Total		$	203.65
Today:	15.37	Loads:	1

Weighmaster: Melissa

COPY 1 CUSTOMER

Lenz Enterprises, Inc.
P.O. Box 868
Stanwood, WA 98292
(360) 629-2933

GREEN BLENZ COMPOST

Ticket No.: **540433**

Date : 1/3/2023 Time: 12:34:51PM
Location : **Lenz Stanwood**
Customer : WYSER Wyser Construction Inc.
Order :
P.O. : 1672
Product : 31 Premium Turf Mix
Seal.ID:
425-742-0898
Notes:

	Pounds	Tons
Gross	59680	29.84
Tare	28680 *	14.34 *
Net	31000	15.50

* P. T.

15.50 Cubic Yard

Price		21.60	334.80
Freight		0.00	0.00

Provided to Builders Exchange of WA, Inc. For usage Conditions Agreement see www.bxwa.com - Always Verify Scal

FRIEDMAN & BRUYA, INC.

ENVIRONMENTAL CHEMISTS

James E. Bruya, Ph.D.
Yelena Aravkina, M.S.
Michael Erdahl, B.S.
Vineta Mills, M.S.
Eric Young, B.S.

5500 4th Avenue South
Seattle, WA 98108
(206) 285-8282
fbi@isomedia.com
www.friedmanandbruya.com

December 9, 2022

Carolyn Wise, Project Manager
Maul Foster Alongi
1329 N State St, Suite 301
Bellingham, WA 98225

Dear Ms Wise:

Included are the results from the testing of material submitted on December 6, 2022 from the Sebranke Remedial Action M1030.02.006, F&BI 212085 project. There are 13 pages included in this report. Any samples that may remain are currently scheduled for disposal in 30 days, or as directed by the Chain of Custody document. If you would like us to return your samples or arrange for long term storage at our offices, please contact us as soon as possible.

We appreciate this opportunity to be of service to you and hope you will call if you should have any questions.

Sincerely,

FRIEDMAN & BRUYA, INC.

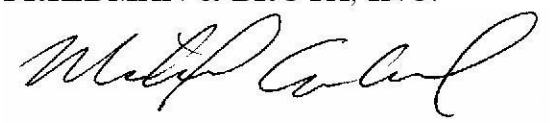

Michael Erdahl
Project Manager

Enclosures
c: Evelyn Lundeen
MFA1209R.DOC

Provided to Builders Exchange of WA, Inc. For usage Conditions Agreement see www.bxwa.com - Always Verify Scal

FRIEDMAN & BRUYA, INC.

ENVIRONMENTAL CHEMISTS

CASE NARRATIVE

This case narrative encompasses samples received on December 6, 2022 by Friedman & Bruya, Inc. from the Maul Foster Alongi Sebranke Remedial Action M1030.02.006, F&BI 212085 project. Samples were logged in under the laboratory ID's listed below.

Laboratory ID	Maul Foster Alongi
212085 -01	TOP SOIL
212085 -02	BORROW

Arsenic in the 6020B matrix spike did not meet the acceptance criteria. The laboratory control sample passed the acceptance criteria, therefore the results were due to matrix effect.

The 8270E matrix spike and matrix spike duplicate failed the relative percent difference for several compounds. The laboratory control sample passed the acceptance criteria, therefore the results were due to matrix effect.

All other quality control requirements were acceptable.

Provided to Builders Exchange of WA, Inc. For usage Conditions Agreement see www.bxwa.com - Always Verify Scal

Date of Report: 12/09/22
Date Received: 12/06/22
Project: Sebranke Remedial Action M1030.02.006, F&BI 212085
Date Extracted: NA
Date Analyzed: 12/07/22

RESULTS FROM THE ANALYSIS OF THE SOIL SAMPLES FOR PERCENT MOISTURE USING ASTM D2216-98

Sample ID Laboratory ID	% Moisture
TOP SOIL 212085-01	27
BORROW 212085-02	8

Provided to Builders Exchange of WA, Inc. For usage Conditions Agreement see www.bxwa.com - Always Verify Scal

Date of Report: 12/09/22
Date Received: 12/06/22
Project: Sebranke Remedial Action M1030.02.006, F&BI 212085
Date Extracted: 12/07/22
Date Analyzed: 12/07/22

RESULTS FROM THE ANALYSIS OF SOIL SAMPLES FOR TOTAL PETROLEUM HYDROCARBONS AS DIESEL AND MOTOR OIL USING METHOD NWTPH-Dx

Results Reported on a Dry Weight Basis
Results Reported as mg/kg (ppm)

Sample ID Laboratory ID	Diesel Range (C_{10}-C_{25})	Motor Oil Range (C_{25}-C_{36})	Surrogate (% Recovery) (Limit 50-150)
TOP SOIL 212085-01	<50	<250	92
BORROW 212085-02	<50	<250	87
Method Blank 02-2905 MB	<50	<250	96

Provided to Builders Exchange of WA, Inc. For usage Conditions Agreement see www.bxwa.com - Always Verify Scal

BXWA

FRIEDMAN & BRUYA, INC.

ENVIRONMENTAL CHEMISTS

Analysis For Total Metals By EPA Method 6020B

Client ID:	TOP SOIL	Client:	Maul Foster Alongi
Date Received:	12/06/22	Project:	Sebranke Remedial Action M1030.02.006
Date Extracted:	12/07/22	Lab ID:	212085-01
Date Analyzed:	12/07/22	Data File:	212085-01.073
Matrix:	Soil	Instrument:	ICPMS2
Units:	mg/kg (ppm) Dry Weight	Operator:	SP

Analyte:	Concentration mg/kg (ppm)
Arsenic	3.00
Barium	97.3
Cadmium	<1
Chromium	18.0
Lead	6.14
Mercury	<1
Selenium	<1
Silver	<1

Provided to Builders Exchange of WA, Inc. For usage Conditions Agreement see www.bxwa.com - Always Verify Scal

Analysis For Total Metals By EPA Method 6020B

Client ID:	BORROW	Client:	Maul Foster Alongi
Date Received:	12/06/22	Project:	Sebranke Remedial Action M1030.02.006
Date Extracted:	12/07/22	Lab ID:	212085-02
Date Analyzed:	12/07/22	Data File:	212085-02.074
Matrix:	Soil	Instrument:	ICPMS2
Units:	mg/kg (ppm) Dry Weight	Operator:	SP

Analyte:	Concentration mg/kg (ppm)
Arsenic	2.66
Barium	53.1
Cadmium	<1
Chromium	24.6
Lead	3.25
Mercury	<1
Selenium	<1
Silver	<1

Provided to Builders Exchange of WA, Inc. For usage Conditions Agreement see www.bxwa.com - Always Verify Scal

Analysis For Total Metals By EPA Method 6020B

Client ID:	Method Blank	Client:	Maul Foster Alongi
Date Received:	NA	Project:	Sebranke Remedial Action M1030.02.006
Date Extracted:	12/07/22	Lab ID:	I2-872 mb
Date Analyzed:	12/07/22	Data File:	I2-872 mb.036
Matrix:	Soil	Instrument:	ICPMS2
Units:	mg/kg (ppm) Dry Weight	Operator:	SP

Analyte:	Concentration mg/kg (ppm)
Arsenic	<1
Barium	<1
Cadmium	<1
Chromium	<1
Lead	<1
Mercury	<1
Selenium	<1
Silver	<1

Provided to Builders Exchange of WA, Inc. For usage Conditions Agreement see www.bxwa.com - Always Verify Scal

FRIEDMAN & BRUYA, INC.

ENVIRONMENTAL CHEMISTS

Analysis For Semivolatile Compounds By EPA Method 8270E

Client Sample ID:	TOP SOIL	Client:	Maul Foster Alongi
Date Received:	12/06/22	Project:	Sebranke Remedial Action M1030.02.006
Date Extracted:	12/07/22	Lab ID:	212085-01 1/25
Date Analyzed:	12/07/22	Data File:	120717.D
Matrix:	Soil	Instrument:	GCMS12
Units:	mg/kg (ppm) Dry Weight	Operator:	VM

Surrogates:	% Recovery:	Lower Limit:	Upper Limit:
Nitrobenzene-d5	80 d	10	198
2-Fluorobiphenyl	88 d	45	117
2,4,6-Tribromophenol	84 d	11	158
Terphenyl-d14	101 d	50	124

Compounds:	Concentration mg/kg (ppm)
Naphthalene	<0.05
2-Methylnaphthalene	<0.05
1-Methylnaphthalene	<0.05
Acenaphthylene	<0.05
Acenaphthene	<0.05
Fluorene	<0.05
Phenanthrene	<0.05
Anthracene	<0.05
Fluoranthene	0.054
Pyrene	<0.05
Benz(a)anthracene	<0.05
Chrysene	<0.05
Benzo(a)pyrene	<0.05
Benzo(b)fluoranthene	<0.05
Benzo(k)fluoranthene	<0.05
Indeno(1,2,3-cd)pyrene	<0.05
Dibenz(a,h)anthracene	<0.05
Benzo(g,h,i)perylene	<0.05

Provided to Builders Exchange of WA, Inc. For usage Conditions Agreement see www.bxwa.com - Always Verify Scal

Analysis For Semivolatile Compounds By EPA Method 8270E

Client Sample ID:	BORROW	Client:	Maul Foster Alongi
Date Received:	12/06/22	Project:	Sebranke Remedial Action M1030.02.006
Date Extracted:	12/07/22	Lab ID:	212085-02 1/5
Date Analyzed:	12/07/22	Data File:	120716.D
Matrix:	Soil	Instrument:	GCMS12
Units:	mg/kg (ppm) Dry Weight	Operator:	VM

Surrogates:	% Recovery:	Lower Limit:	Upper Limit:
Nitrobenzene-d5	88	10	198
2-Fluorobiphenyl	92	45	117
2,4,6-Tribromophenol	93	11	158
Terphenyl-d14	101	50	124

Compounds:	Concentration mg/kg (ppm)
Naphthalene	<0.01
2-Methylnaphthalene	<0.01
1-Methylnaphthalene	<0.01
Acenaphthylene	<0.01
Acenaphthene	<0.01
Fluorene	<0.01
Phenanthrene	<0.01
Anthracene	<0.01
Fluoranthene	<0.01
Pyrene	<0.01
Benz(a)anthracene	<0.01
Chrysene	<0.01
Benzo(a)pyrene	<0.01
Benzo(b)fluoranthene	<0.01
Benzo(k)fluoranthene	<0.01
Indeno(1,2,3-cd)pyrene	<0.01
Dibenz(a,h)anthracene	<0.01
Benzo(g,h,i)perylene	<0.01

Provided to Builders Exchange of WA, Inc. For usage Conditions Agreement see www.bxwa.com - Always Verify Scal

Analysis For Semivolatile Compounds By EPA Method 8270E

Client Sample ID:	Method Blank	Client:	Maul Foster Alongi
Date Received:	Not Applicable	Project:	Sebranke Remedial Action M1030.02.006
Date Extracted:	12/07/22	Lab ID:	02-2906 mb 1/5
Date Analyzed:	12/08/22	Data File:	120730.D
Matrix:	Soil	Instrument:	GCMS9
Units:	mg/kg (ppm) Dry Weight	Operator:	VM

Surrogates:	% Recovery:	Lower Limit:	Upper Limit:
Nitrobenzene-d5	93	10	198
2-Fluorobiphenyl	92	45	117
2,4,6-Tribromophenol	83	11	158
Terphenyl-d14	107	50	124

Compounds:	Concentration mg/kg (ppm)
Naphthalene	<0.01
2-Methylnaphthalene	<0.01
1-Methylnaphthalene	<0.01
Acenaphthylene	<0.01
Acenaphthene	<0.01
Fluorene	<0.01
Phenanthrene	<0.01
Anthracene	<0.01
Fluoranthene	<0.01
Pyrene	<0.01
Benz(a)anthracene	<0.01
Chrysene	<0.01
Benzo(a)pyrene	<0.01
Benzo(b)fluoranthene	<0.01
Benzo(k)fluoranthene	<0.01
Indeno(1,2,3-cd)pyrene	<0.01
Dibenz(a,h)anthracene	<0.01
Benzo(g,h,i)perylene	<0.01

Provided to Builders Exchange of WA, Inc. For usage Conditions Agreement see www.bxwa.com - Always Verify Scal

Date of Report: 12/09/22
Date Received: 12/06/22
Project: Sebranke Remedial Action M1030.02.006, F&BI 212085

QUALITY ASSURANCE RESULTS FROM THE ANALYSIS OF SOIL SAMPLES FOR TOTAL PETROLEUM HYDROCARBONS AS DIESEL EXTENDED USING METHOD NWTPH-Dx

Laboratory Code: 212084-02 (Matrix Spike)

Analyte	Reporting Units	Spike Level	(Wet wt) Sample Result	Percent Recovery MS	Percent Recovery MSD	Acceptance Criteria	RPD (Limit 20)
Diesel Extended	mg/kg (ppm)	2,000	270	76	76	70-130	0

Laboratory Code: Laboratory Control Sample

Analyte	Reporting Units	Spike Level	Percent Recovery LCS	Acceptance Criteria
Diesel Extended	mg/kg (ppm)	2,000	90	70-130

Provided to Builders Exchange of WA, Inc. For usage Conditions Agreement see www.bxwa.com - Always Verify Scal

Date of Report: 12/09/22
Date Received: 12/06/22
Project: Sebranke Remedial Action M1030.02.006, F&BI 212085

QUALITY ASSURANCE RESULTS FOR THE ANALYSIS OF SOIL SAMPLES FOR TOTAL METALS USING EPA METHOD 6020B

Laboratory Code: 212084-02 x5 (Matrix Spike)

Analyte	Reporting Units	Spike Level	Sample Result (Wet wt)	Percent Recovery MS	Percent Recovery MSD	Acceptance Criteria	RPD (Limit 20)
Arsenic	mg/kg (ppm)	10	<5	72 vo	83	75-125	14
Barium	mg/kg (ppm)	50	69.8	77	87	75-125	12
Cadmium	mg/kg (ppm)	10	<5	93	100	75-125	7
Chromium	mg/kg (ppm)	50	15.4	80	86	75-125	7
Lead	mg/kg (ppm)	50	110	36 b	35 b	75-125	3
Mercury	mg/kg (ppm	5	<5	93	107	75-125	14
Selenium	mg/kg (ppm)	5	<5	89	90	75-125	1
Silver	mg/kg (ppm)	10	<5	83	91	75-125	9

Laboratory Code: Laboratory Control Sample

Analyte	Reporting Units	Spike Level	Percent Recovery LCS	Acceptance Criteria
Arsenic	mg/kg (ppm)	10	82	80-120
Barium	mg/kg (ppm)	50	90	80-120
Cadmium	mg/kg (ppm)	10	97	80-120
Chromium	mg/kg (ppm)	50	104	80-120
Lead	mg/kg (ppm)	50	93	80-120
Mercury	mg/kg (ppm)	5	97	80-120
Selenium	mg/kg (ppm)	5	90	80-120
Silver	mg/kg (ppm)	10	89	80-120

Provided to Builders Exchange of WA, Inc. For usage Conditions Agreement see www.bxwa.com - Always Verify Scal

Date of Report: 12/09/22
Date Received: 12/06/22
Project: Sebranke Remedial Action M1030.02.006, F&BI 212085

QUALITY ASSURANCE RESULTS FOR THE ANALYSIS OF SOIL SAMPLES FOR SEMIVOLATILES BY EPA METHOD 8270E

Laboratory Code: 212082-02 1/5 (Matrix Spike)

Analyte	Reporting Units	Spike Level	Sample Result (Wet wt)	Percent Recovery MS	Percent Recovery MSD	Acceptance Criteria	RPD (Limit 20)
Naphthalene	mg/kg (ppm)	0.83	<0.01	66	80	28-125	19
2-Methylnaphthalene	mg/kg (ppm)	0.83	<0.01	78	84	10-192	7
1-Methylnaphthalene	mg/kg (ppm)	0.83	<0.01	79	86	10-163	8
Acenaphthylene	mg/kg (ppm)	0.83	<0.01	72	85	45-128	17
Acenaphthene	mg/kg (ppm)	0.83	<0.01	70	84	36-125	18
Fluorene	mg/kg (ppm)	0.83	<0.01	81	85	48-121	5
Phenanthrene	mg/kg (ppm)	0.83	<0.01	68	85	50-150	22 vo
Anthracene	mg/kg (ppm)	0.83	<0.01	72	84	50-150	15
Fluoranthene	mg/kg (ppm)	0.83	0.012	78	85	50-150	9
Pyrene	mg/kg (ppm)	0.83	0.012	77	85	40-134	10
Benz(a)anthracene	mg/kg (ppm)	0.83	<0.01	77	86	50-150	11
Chrysene	mg/kg (ppm)	0.83	<0.01	75	91	50-150	19
Benzo(a)pyrene	mg/kg (ppm)	0.83	<0.01	75	87	50-150	15
Benzo(b)fluoranthene	mg/kg (ppm)	0.83	0.010	79	84	50-150	6
Benzo(k)fluoranthene	mg/kg (ppm)	0.83	<0.01	80	87	50-150	8
Indeno(1,2,3-cd)pyrene	mg/kg (ppm)	0.83	<0.01	58	89	41-134	42 vo
Dibenz(a,h)anthracene	mg/kg (ppm)	0.83	<0.01	64	92	44-130	36 vo
Benzo(g,h,i)perylene	mg/kg (ppm)	0.83	<0.01	48	89	33-131	60 vo

Laboratory Code: Laboratory Control Sample 1/5

Analyte	Reporting Units	Spike Level	Percent Recovery LCS	Acceptance Criteria
Naphthalene	mg/kg (ppm)	0.83	83	58-108
2-Methylnaphthalene	mg/kg (ppm)	0.83	89	67-109
1-Methylnaphthalene	mg/kg (ppm)	0.83	91	66-107
Acenaphthylene	mg/kg (ppm)	0.83	89	70-130
Acenaphthene	mg/kg (ppm)	0.83	88	66-112
Fluorene	mg/kg (ppm)	0.83	90	67-117
Phenanthrene	mg/kg (ppm)	0.83	90	70-130
Anthracene	mg/kg (ppm)	0.83	88	70-130
Fluoranthene	mg/kg (ppm)	0.83	90	70-130
Pyrene	mg/kg (ppm)	0.83	90	70-130
Benz(a)anthracene	mg/kg (ppm)	0.83	90	70-130
Chrysene	mg/kg (ppm)	0.83	95	70-130
Benzo(a)pyrene	mg/kg (ppm)	0.83	90	68-120
Benzo(b)fluoranthene	mg/kg (ppm)	0.83	88	69-125
Benzo(k)fluoranthene	mg/kg (ppm)	0.83	90	70-130
Indeno(1,2,3-cd)pyrene	mg/kg (ppm)	0.83	91	67-129
Dibenz(a,h)anthracene	mg/kg (ppm)	0.83	91	67-128
Benzo(g,h,i)perylene	mg/kg (ppm)	0.83	91	64-127

Provided to Builders Exchange of WA, Inc. For usage Conditions Agreement see www.bxwa.com - Always Verify Scal

Data Qualifiers & Definitions

a - The analyte was detected at a level less than five times the reporting limit. The RPD results may not provide reliable information on the variability of the analysis.

b - The analyte was spiked at a level that was less than five times that present in the sample. Matrix spike recoveries may not be meaningful.

ca - The calibration results for the analyte were outside of acceptance criteria. The value reported is an estimate.

c - The presence of the analyte may be due to carryover from previous sample injections.

cf - The sample was centrifuged prior to analysis.

d - The sample was diluted. Detection limits were raised and surrogate recoveries may not be meaningful.

dv - Insufficient sample volume was available to achieve normal reporting limits.

f - The sample was laboratory filtered prior to analysis.

fb - The analyte was detected in the method blank.

fc - The analyte is a common laboratory and field contaminant.

hr - The sample and duplicate were reextracted and reanalyzed. RPD results were still outside of control limits. Variability is attributed to sample inhomogeneity.

hs - Headspace was present in the container used for analysis.

ht – The analysis was performed outside the method or client-specified holding time requirement.

ip - Recovery fell outside of control limits due to sample matrix effects.

j - The analyte concentration is reported below the lowest calibration standard. The value reported is an estimate.

J - The internal standard associated with the analyte is out of control limits. The reported concentration is an estimate.

jl - The laboratory control sample(s) percent recovery and/or RPD were out of control limits. The reported concentration should be considered an estimate.

js - The surrogate associated with the analyte is out of control limits. The reported concentration should be considered an estimate.

lc - The presence of the analyte is likely due to laboratory contamination.

L - The reported concentration was generated from a library search.

nm - The analyte was not detected in one or more of the duplicate analyses. Therefore, calculation of the RPD is not applicable.

pc - The sample was received with incorrect preservation or in a container not approved by the method. The value reported should be considered an estimate.

ve - The analyte response exceeded the valid instrument calibration range. The value reported is an estimate.

vo - The value reported fell outside the control limits established for this analyte.

x - The sample chromatographic pattern does not resemble the fuel standard used for quantitation.

Provided to Builders Exchange of WA, Inc. For usage Conditions Agreement see www.bxwa.com - Always Verify Scal

212085

SAMPLE CHAIN OF CUSTODY

12/06/22

G1

Page # 1 of 1

Report To Carolyn Wise

Company Maul Foster & Alongi

Address 1329 N State St, #401

City, State, ZIP Bellingham, WA 98225

Phone (360) 690-9282 Email cwise@maulfoster.com

SAMPLERS (signature)

PROJECT NAME: Sebranke remedial action

PO #: M1030.02.006

REMARKS

Project specific RLs? - Yes / No

INVOICE TO: accounting@maulfoster.com

TURNAROUND TIME
- ☐ Standard turnaround
- ☒ RUSH 24 hr

Rush charges authorized by:

SAMPLE DISPOSAL
- ☐ Archive samples
- ☐ Other

Default: Dispose after 30 days

ANALYSES REQUESTED

Sample ID	Lab ID	Date Sampled	Time Sampled	Sample Type	# of Jars	NWTPH-Dx	NWTPH-Gx	BTEX EPA 8021	NWTPH-HCID	VOCs EPA 8260	PAHs EPA 8270	PCBs EPA 8082	[illegible]	RCRA 8 by EPA 6020			Notes
TOPSOIL	01	12/06/22	1100	S EJ	1	X					X		X	X			
BORROW	02A-B	↓	1105	S	2	X					X		X EJ2	X			

SIGNATURE	PRINT NAME	COMPANY	DATE	TIME
Relinquished by:	Evelyn Lundeen	MFA	12/06/22	1700
Received by:	Eric Young	F&B	12/6/22	1700
Relinquished by:				
Received by:		Samples received at 4 °C		

Friedman & Bruya, Inc.
Ph. (206) 285-8282

Provided to Builders Exchange of WA, Inc. For usage Conditions Agreement see www.bxwa.com - Always Verify Scal

APPENDIX I

COMPLIANCE MONITORING PLAN



Provided to Builders Exchange of WA, Inc. For usage Conditions Agreement see www.bxwa.com - Always Verify Scal

GROUNDWATER COMPLIANCE MONITORING PLAN

SEBRANKE PROPERTY
STANWOOD, WASHINGTON

FACILITY SITE ID: 74354
CLEANUP SITE ID: 15464

Prepared for
CITY OF STANWOOD
STANWOOD, WASHINGTON
June 20, 2023
Project No. M1030.02.006

Prepared by
Maul Foster & Alongi, Inc.
1329 N State Street, Suite 301, Bellingham, WA 98225

MAUL FOSTER ALONGI

Provided to Builders Exchange of WA, Inc. For usage Conditions Agreement see www.bxwa.com - Always Verify Scal

GROUNDWATER COMPLIANCE MONITORING PLAN

SEBRANKE PROPERTY
STANWOOD, WASHINGTON

FACILITY SITE ID: 74354
CLEANUP SITE ID: 15464

The material and data in this report were prepared under the supervision and direction of the undersigned.

MAUL FOSTER & ALONGI, INC.



Carolyn Wise, LHG
Project Hydrogeologist



Evelyn Lundeen, EIT
Staff Engineer

Provided to Builders Exchange of WA, Inc. For usage Conditions Agreement see www.bxwa.com - Always Verify Scal

CONTENTS

TABLES AND ILLUSTRATIONS V

ACRONYMS AND ABBREVIATIONS VI

1 INTRODUCTION 1
1.1 PURPOSE 1

2 BACKGROUND 2
2.1 PROPERTY DESCRIPTION AND HISTORY 2
2.2 2022 REMEDIAL ACTION 2
2.3 CONCEPTUAL SITE MODEL 3
2.4 RESIDUAL CONTAMINATION 3

3 MONITORING PROGRAM 3
3.1 MONITORING OBJECTIVES 3
3.2 POINT OF COMPLIANCE 4
3.3 GROUNDWATER MONITORING NETWORK 4
3.4 SAMPLING AND ANALYSIS 4

4 ACCESS AND SITE PREPARATION 5
4.1 ACCESS 5
4.2 SITE PREPARATION 5

5 GROUNDWATER ASSESSMENT 5
5.1 MONITORING WELL INSTALLATION 6
5.2 GROUNDWATER ELEVATIONS 7
5.3 MONITORING WELL DECOMMISSIONING 7
5.4 SURVEYING 7
5.5 EQUIPMENT CLEANING AND DECONTAMINATION 7
5.6 MANAGEMENT OF INVESTIGATION-DERIVED WASTE 8

6 GROUNDWATER SAMPLING 8
6.1 MONITORING WELL GROUNDWATER SAMPLING 8
6.2 NOMENCLATURE 8

7 ANALYTICAL METHODS 9
7.1 CHEMICAL OF INTEREST 9
7.2 LABORATORY TEST METHODS AND REPORTING LIMITS 9
7.3 QA/QC SAMPLES GENERATED IN FIELD 9
7.4 LABORATORY OPERATIONS 9
7.5 SAMPLE CONTAINERS, PRESERVATION, AND HANDLING 10
7.6 SAMPLE CUSTODY 10
7.7 INSTRUMENTATION 11
7.8 LABORATORY QA/QC SAMPLES 12
7.9 FIELD QC 13
7.10 DATA REDUCTION, VALIDATION, AND REPORTING 14

8 REPORTING 16

9 SCHEDULE 17

LIMITATIONS

Provided to Builders Exchange of WA, Inc. For usage Conditions Agreement see www.bxwa.com - Always Verify Scal

CONTENTS (CONTINUED)

REFERENCES

TABLE

FIGURES

Provided to Builders Exchange of WA, Inc. For usage Conditions Agreement see www.bxwa.com - Always Verify Scal

TABLES AND ILLUSTRATIONS

FOLLOWING PLAN:

TABLE

7-1 SAMPLING AND ANALYSIS SUMMARY

FIGURES

1-1 PROPERTY LOCATION

5-1 PROPOSED MONITORING WELL LOCATIONS

Provided to Builders Exchange of WA, Inc. For usage Conditions Agreement see www.bxwa.com - Always Verify Scal

ACRONYMS AND ABBREVIATIONS

BTEX	benzene, toluene, ethylbenzene, and total xylenes
the City	City of Stanwood
CMP	compliance monitoring plan
cPAH	carcinogenic polycyclic aromatic hydrocarbon
COC	chemicals of concern
CUL	cleanup level
DRO	diesel-range organics
Ecology	Washington State Department of Ecology
EPA	U.S. Environmental Protection Agency
IDW	investigation-derived waste
LCS	laboratory control sample
LDS	laboratory duplicate sample
LNAPL	light nonaqueous-phase liquid
MFA	Maul Foster & Alongi, Inc.
MS/MSD	matrix spike/matrix spike duplicate
MTCA	Model Toxics Control Act
NWTPH	Northwest Total Petroleum Hydrocarbon
ORO	lube-oil-range organics
POC	point of compliance
the Property	8627 271st Street NW in Stanwood, Washington
QA	quality assurance
QC	quality control
UST	underground storage tank
WAC	Washington Administrative Code

Provided to Builders Exchange of WA, Inc. For usage Conditions Agreement see www.bxwa.com - Always Verify Scal

1 INTRODUCTION

On behalf of the City of Stanwood (the City), Maul Foster & Alongi, Inc. (MFA), has prepared this compliance monitoring plan (CMP) describing the groundwater monitoring program at the Sebranke property located at 8627 271st Street NW in Stanwood, Washington (the Property) (see Figure 1-1). The Property is listed with the Washington State Department of Ecology (Ecology) under facility site ID 74354 and cleanup site ID 15464.

The Property is currently enrolled in the Ecology voluntary cleanup program (NW 3322). The City received funding to support cleanup actions at the Property through the brownfields revolving loan fund administered by the Washington State Department of Commerce with funding from the U.S. Environmental Protection Agency (EPA). Current redevelopment plans for the Property include a public park. The cleanup action was intended to mitigate direct-contact exposure risk for visitors to the future park.

This CMP was developed in accordance with the compliance monitoring requirements as put forth in the Washington State Model Toxics Control Act (MTCA) (Washington Administrative Code 173-340-410).

1.1 Purpose

This CMP provides guidance on procedures for groundwater sampling, monitoring well installation and decommissioning, and management of investigation-derived waste (IDW). It also includes procedures for collecting, analyzing, evaluating, and reporting useful data. The document includes quality assurance (QA) procedures for field activities, sampling QA and quality control (QC) procedures, and data validation. The goal of the procedures outlined in this CMP is to obtain reliable data about physical, environmental, and chemical conditions at the Property in order to support the goals and objectives of the remedial action.

The objectives of this CMP are to:

- Identify existing groundwater monitoring wells in the groundwater monitoring network.
- Identify groundwater monitoring wells adjacent to, or in the footprint of treated groundwater to allow for confirmation that cleanup levels (CULs) in groundwater are being met.
- Describe the CULs for the Property.
- Provide guidelines and criteria for each stage of monitoring, including criteria for assessing compliance with CULs and monitoring frequency.
- Provide criteria for decommissioning monitoring wells.
- Define requirements for terminating the groundwater monitoring program.

Provided to Builders Exchange of WA, Inc. For usage Conditions Agreement see www.bxwa.com - Always Verify Scal

2 BACKGROUND

2.1 Property Description and History

The approximately 0.11-acre Property is located in downtown Stanwood, Washington in section 19, township 32 north, range 4 east of the Willamette Meridian, on Snohomish County tax lots 00432400101500 and 00432400101400 (see Figure 1-1). The Property is zoned "Mainstreet Business with a Transit Overlay" and is currently an undeveloped vacant lot with a gravel and grassy surface.

Based on documented historical uses and data obtained during previous investigations, it appears that the following historical operations and uses at the Property and/or at adjoining properties may have contributed to contamination at the Property:

- Former auto repair building (on Property)
- Off-Property migration of contamination onto the Property from a former filling station

2.2 2022 Remedial Action

A remedial action completed at the Property between December 2022 and January 2023 included the following primary elements:

- Decommissioning of an abandoned approximately 800-gallon underground storage tank (UST).
- Excavation and off-site disposal of shallow soil (less than two feet below ground surface [bgs]) with concentrations of heavy oils, carcinogenic polycyclic aromatic hydrocarbons (cPAHs), and metals (arsenic, cadmium lead) above MTCA Method A CULs.
- Excavation and off-site disposal of subsurface soil (greater than two feet bgs) with concentrations of heavy oils and benzene above MTCA Method A CULs.
- Decommissioning of two monitoring wells (MW01 and MW03).
- Application of in situ treatment bioremediation product during excavation backfilling.
- Excavation backfilling with clean import fill and clean overburden soil from the excavation. All reused overburden soil was characterized by laboratory analysis as suitable for this purpose.

Additional details are provided in the completion report, to which this document is an appendix.

Provided to Builders Exchange of WA, Inc. For usage Conditions Agreement see www.bxwa.com - Always Verify Scal

2.3 Conceptual Site Model

A conceptual site model for the Property is provided in the *Supplemental Investigation and Cleanup Options Report, Sebranke Property, Stanwood, Washington* (MFA 2021).

2.4 Residual Contamination

Several environmental investigations completed at the Property identified chemicals of concern (COC) in soil and/or groundwater (MFA 2016, 2021a,b). These investigations identified the following concentrations that were above MTCA Method A CULs for unrestricted land use in shallow soil:

- Metals (arsenic, lead, and cadmium)
- Carcinogenic polycyclic aromatic hydrocarbons (cPAHs)
- Diesel- and lube-oil-range organics (heavy oils)

Soil with concentrations of COCs above MTCA Method A CULs was excavated during the 2022/2023 remedial action up to two feet below ground surface within the parcel boundaries of the Property.

Groundwater samples collected from temporary and permanent monitoring wells on the Property were determined to have concentrations of diesel- and lube-oil-range organics (heavy oils) above the MTCA Method A CUL on the central and southeastern portions of the Property (MFA 2022).

Deeper soil was removed in the central and southeastern portion of the Property during the 2022/2023 remedial action. Concentrations of heavy oils and benzene above MTCA Method A CULs in soil remain in place in the southwest portion of the Property near decommissioned monitoring well MW03. Removal of this contamination was not possible because of the property parcel boundaries and setbacks associated with utilities. Amended backfill was placed in the excavation to treat this contamination along with remaining groundwater contamination. Confirmation that CULs are met will be determined through the CMP.

3 MONITORING PROGRAM

This section describes the groundwater monitoring program, including identification of the monitoring well network, stages of monitoring, sampling and analysis program, and a decision-making process for continuation or cessation of monitoring in each well or the need for implementation of contingent actions.

3.1 Monitoring Objectives

The primary objectives of groundwater monitoring are to:

Provided to Builders Exchange of WA, Inc. For usage Conditions Agreement see www.bxwa.com - Always Verify Scal

- Assess the effectiveness of the 2022/2023 remedial action.
- Evaluate ongoing groundwater quality conditions.
- Evaluate compliance with MTCA Method A CULs.
- Evaluate the COC concentration trends of the dissolved-phase plume (i.e., whether COC concentrations are declining, stabilizing, or increasing) and whether the lateral extent of contamination is stable or migrating.

3.2 Point of Compliance

The point of compliance (POC) is the point or points where the groundwater CULs must be attained for a site to be in compliance with the cleanup standards. The standard POC is groundwater throughout the Property from the uppermost level of the saturated zone extending vertically to the lowest depth that could potentially be affected by the Property. Groundwater CULs shall be attained in all groundwater from the POC to the outer boundary of the hazardous-substance plume.

3.3 Groundwater Monitoring Network

To meet the groundwater monitoring requirements in Washington Administrative Code (WAC) 173-340-410, quarterly groundwater monitoring activities will be conducted at the Property. Groundwater monitoring will be conducted at the following wells: MW01R, MW02, MW03R, MW04.

The installation of three new groundwater monitoring wells (MW01R, MW03R, and MW04) in and adjacent to the deep soil excavation is proposed to evaluate the effectiveness of the remedial and monitor the groundwater quality.

Well construction log for existing monitoring well MW02 is included in the *Supplemental Investigation and Cleanup Options Report, Sebranke Property, Stanwood, Washington.*

3.4 Sampling and Analysis

Groundwater monitoring will include measuring water levels and water quality parameters (e.g., dissolved oxygen, pH, temperature, specific conductance, and oxygen reduction potential); assessing the presence of light nonaqueous-phase liquid (LNAPL) and measuring its thickness, if it is present; and collection and analysis of groundwater samples for IHSs, as detailed below. Groundwater sampling will be conducted consistent with the methods and protocol outlined in this document.

Heavy oils in groundwater are the primary groundwater COC for the Property. Therefore, groundwater samples will be analyzed, including the specific analytical methods, or comparable methods deemed suitable and approved by Ecology:

- Diesel-range organics and lube-oil-range organics (DRO and ORO [heavy oils]) by Northwest Total Petroleum Hydrocarbon (NWTPH)-Dx Method

Provided to Builders Exchange of WA, Inc. For usage Conditions Agreement see www.bxwa.com - Always Verify Scal

An elevated detection of benzene was identified in subsurface soil during UST decommissioning activities. Therefore, the first sampling event will include the analyses for benzene, toluene, ethylbenzene, and total xylenes (BTEX) by EPA 8260.

Following receipt of data from first sampling event, these additional analyses will be evaluated for future sampling events.

The following activities will be conducted during each groundwater monitoring event:

- Groundwater sample collection and analysis from each monitoring well for evaluating compliance with CULs
- Water level measurements in each monitoring well for evaluating hydraulic gradient trends
- Analysis of COC concentration trends relative to associated CULs

4 ACCESS AND SITE PREPARATION

4.1 Access

MFA personnel will be on the Property during compliance monitoring activities. Access to the Property is allowed at all reasonable times for the purpose of performing work. Work activities resulting in loud noises will generally be confined to the hours between 7 a.m. and 7 p.m. MFA will notify the City before beginning work at the Property.

4.2 Site Preparation

Before any subsurface field activities (e.g., monitoring well installation) begin at the Property, public and private utility-locating services will be used to check for underground utilities and pipes near each proposed well or boring location. MFA will coordinate fieldwork with the City to define the locations of possible on-site utilities, piping, and other subsurface obstructions.

5 GROUNDWATER ASSESSMENT

Existing and proposed monitoring well locations are shown on Figure 5-1. It is anticipated that additional wells at the Property will be installed using a direct-push drill rig (i.e., Geoprobe™) in accordance with the well installation details described below. Subsurface soil will be logged and screened with a photoionization detector during well installation. In the event that refusal is met before the desired well installation depth is reached (i.e., significant debris, cobbles, or bedrock are

Provided to Builders Exchange of WA, Inc. For usage Conditions Agreement see www.bxwa.com - Always Verify Scal

encountered), locations may be adjusted in the field or a different type of drilling technology may be considered.

5.1 Monitoring Well Installation

Monitoring wells will be constructed according to the Washington State well construction standards (WAC Chapter 173-160) and as described below:

- Monitoring wells will be constructed with 2-inch-diameter polyvinyl chloride or stainless steel riser pipes and screened sections consisting of 0.010-inch machine slots. The monitoring wells may be constructed with prepacked well screen with 10 x 20 washed silica sand or by placing materials downhole, following the WAC regulation listed above.
- Additional filter pack may be placed around the prepacked screen, if used. The additional filter pack will consist of graded 10 x 20 washed silica sand and will extend a maximum of 1 foot below the bottom of the screen and 3 feet above the top of the screen. A weighted line will be used to monitor the level of the filter pack during installation. The filter pack may be surged during installation.
- Bentonite grout or chips hydrated with potable water (e.g., 0.75-inch minus) will be used to seal the annulus above the filter pack. A weighted line will be used to measure the top of the bentonite chips as they are poured into place.
- At least 24 hours after well installation, the well will be developed by surging, bailing, or pumping to remove sediment that may have accumulated during installation and to improve the hydraulic connection with the water-bearing zone.
- Water quality field parameters such as specific conductance, pH, temperature, and turbidity will be measured during well development, as deemed appropriate. The wells will be developed until the turbidity measurements are 10 nephelometric turbidity units or less, or until there is no noticeable decrease in turbidity. To the extent practical, water quality field parameters will be considered stable when the specific conductance is within 10 percent of the previous reading, pH is within 0.1 standard unit of the previous reading, and temperature is within 0.1 degree Celsius of the previous reading.
- Development methods, purge volumes, and water quality parameters will be recorded on well development field forms or in the field notes.

During well installation, soil will be logged by a geologist or hydrogeologist licensed in the State of Washington or a person working under the direct supervision of a geologist or hydrogeologist licensed in the State of Washington.

Soil characterization at the Property is considered complete; soil samples will not be collected for chemical analysis. Boring logs will include information such as the project name and location, the name of the drilling contractor, the drilling method, the sampling method, sample depths, blow counts (if applicable), a description of soil encountered, and screened intervals. Soils will be described using ASTM International standard D2488-00, Standard Practice for Description and Identification of Soils

Provided to Builders Exchange of WA, Inc. For usage Conditions Agreement see www.bxwa.com - Always Verify Scal

(Visual-Manual Procedure). The information will be recorded on an MFA boring log form or in the field notes.

5.2 Groundwater Elevations

Depth to groundwater and LNAPL or free product, if present, will be recorded to the nearest 0.01 foot, using an interface probe and/or an electronic water-level indicator, from the designated measuring point (typically the top of the casing on the north side). The measuring point will be marked so that readings are measured from the same reference point during each monitoring event, and the measuring-point elevation will be surveyed. If LNAPL is present, a measurement of its thickness will be recorded. Groundwater elevations at wells with LNAPL will be corrected to compensate for the effect of differing densities of the LNAPL and the water. The total well depth will also be measured. The water-level indicator will be decontaminated between wells in accordance with the procedures outlined in Section 5.5.

5.3 Monitoring Well Decommissioning

If wells are decommissioned, they will be filled with bentonite grout or chips hydrated with potable water, in accordance with WAC 173-160, the WAC for Minimum Standards for Construction and Maintenance of Wells.

5.4 Surveying

Field staff will navigate to proposed well locations, using a handheld global positioning unit (e.g., Trimble™) with submeter accuracy. The location and measuring point elevation of newly installed monitoring wells will be surveyed by a licensed surveyor.

5.5 Equipment Cleaning and Decontamination

5.5.1 Drilling Equipment

The drilling equipment will be decontaminated before installation of the first monitoring well and before drilling each new monitoring well. Decontamination fluids will be transferred to drums approved by the Washington State Department of Transportation (WSDOT) and will be managed according to the procedures outlined in Section 3.6.

5.5.2 Sampling Equipment

Nondisposable sampling equipment and reusable materials will be decontaminated prior to sample collection and between sampling locations. Decontamination will consist of the following:

- Tap-water rinse (may consist of an equivalent high-pressure or hot-water rinse). Visible soil will be removed by scrubbing.

Provided to Builders Exchange of WA, Inc. For usage Conditions Agreement see www.bxwa.com - Always Verify Scal

- Nonphosphate detergent wash, consisting of a diluted mixture of Liqui-Nox® (or equivalent) and tap water.
- Distilled-water rinse.
- Methanol solution rinse (1:1 solution of methanol with distilled water)
- Distilled-water rinse.

All decontamination fluids will be transferred to drums for IDW management, as described below.

5.6 Management of Investigation-Derived Waste

IDW may include soil cuttings, purged groundwater, decontamination fluids, sampling debris, and personal protective equipment. The IDW will be segregated into solids, liquids, and sampling debris (e.g., personal protective equipment, tubing, bailers). IDW will be stored in a designated area on the Property in WSDOT-approved drums.

Drums will be labeled with their contents, the approximate volume of material, the date of collection, and the origin of the material. The drums will be sealed, secured, and transferred to a designated area on the Property, pending characterization. Analytical data from groundwater sampling activities may be used to characterize the IDW generated during drilling and monitoring well sampling.

6 GROUNDWATER SAMPLING

6.1 Monitoring Well Groundwater Sampling

If a peristaltic pump is used, groundwater will be purged at the standard EPA-approved low-flow purge rate (e.g., 0.1 to 0.5 liter per minute). Groundwater samples will be collected from the middle of the screened interval or, if the water level is below the top of the screen, from the middle of the water column. New, disposable tubing will be used at each monitoring location.

Before collection of groundwater samples, the water level will be measured and a minimum of one well volume will be purged. Samples will be collected after selected water quality parameters (e.g., temperature, specific conductance, pH, turbidity) have stabilized for three successive readings. If the well goes dry during purging, a sample can be collected once the well recharges a sufficient volume of water. During purging, the flow rates, water levels, and water quality parameters will be recorded on a field sampling data sheet (FSDS) form. Groundwater will be transferred directly into laboratory-supplied containers specific to the analysis required.

6.2 Nomenclature

Groundwater samples will be labeled with a prefix to describe the sampling location, "GW" to indicate a groundwater sample matrix, and the date of collection (MMDDYY). For example, a groundwater

Provided to Builders Exchange of WA, Inc. For usage Conditions Agreement see www.bxwa.com - Always Verify Scal

sample collected from a monitoring well at location MW01R on October 6, 2023, will have the sample nomenclature of MW01R-GW-100623.

For duplicate groundwater samples, "DUP" will replace the location identification number. The sample will have the same sample time as the primary sample. A duplicate sample of the abovementioned sample would appear as MWDUP-GW-100623.

7 ANALYTICAL METHODS

7.1 Chemical of Interest

Heavy oils (DRO and ORO) have been identified as the primary COC for groundwater on the Property.

All samples submitted for laboratory analysis will be analyzed on a standard turnaround time. Analytical methods and sample handling procedures are included in Table 7-1.

7.2 Laboratory Test Methods and Reporting Limits

7.2.1 Groundwater

In accordance with the QA/QC requirements set forth in this SAP, a Washington State–accredited laboratory will perform the analyses that are listed below, along with the specific laboratory methods (also summarized in Table 7-1):

- DRO and ORO by NWTPH-Dx
- BTEX by EPA Method 8260 (first event)

7.3 QA/QC Samples Generated in Field

QC samples collected in the field will include trip blanks and field duplicates. Field duplicate QC samples will be identified on the FSDS form, and trip blanks will be documented on the chain of custody. Field and trip blank results may indicate possible contamination introduced by field or laboratory procedures. Field duplicate sample results will help evaluate precision in both field and laboratory procedures.

7.4 Laboratory Operations

In the laboratory, QC samples may include matrix spike and matrix spike duplicate (MS/MSD) samples, laboratory control samples (LCSs), surrogate spike samples, and method blanks, as well as other QC samples and procedures as required by the selected methods.

Provided to Builders Exchange of WA, Inc. For usage Conditions Agreement see www.bxwa.com - Always Verify Scal

7.5 Sample Containers, Preservation, and Handling

7.5.1 Preservation

Groundwater samples will be collected in laboratory-supplied containers, as summarized in Table 7-1. Immediately following collection, groundwater samples will be transferred to iced coolers and stored at approximately 4 degrees Celsius.

7.5.2 Sample Packaging and Shipping

All samples will be stored and transported to the analytical laboratory in iced coolers. Samples will be submitted to the analytical laboratory to allow for analysis within the applicable holding time (see Table 7-1).

7.6 Sample Custody

Sample custody will be tracked using a chain-of-custody form, which will be filled out with the appropriate sample and analytical information immediately after samples are collected.

The following items will be recorded on the chain-of-custody form:

- Project name
- Project number
- MFA project manager
- Sampler name(s)
- Sample number, date and time collected, media, number of bottles submitted
- Requested analyses for each sample
- Type of data package required
- Turnaround requirements
- Signature, printed name, and organization name of persons having custody of samples, and date and time of transfer
- Additional instructions or considerations that would affect analysis (nonaqueous layers, archiving, etc.)

Persons in possession of the samples will be required to sign and date the chain-of-custody form whenever samples are transferred between individuals or organizations. The laboratory will implement its in-house custody procedures, which begin when sample custody is transferred to laboratory personnel.

Provided to Builders Exchange of WA, Inc. For usage Conditions Agreement see www.bxwa.com - Always Verify Scal

If samples are shipped via air or ground transportation (by a third party), the following custody procedures will be followed:

- The chain-of-custody will be signed and dated when custody is relinquished to the carrier.
- The signed chain-of-custody(s) will be packed in shipping containers with the samples, and a custody seal will be placed on the container.
- The shipping documentation will be used by the laboratory to document sample receipt.

At the analytical laboratory, a designated sample custodian will accept custody of the samples and will verify that the chain-of-custody form matches the samples received.

7.7 Instrumentation

7.7.1 Field Instrumentation

Field instruments will be used during the investigations. The following field equipment may require calibration before use and periodically during sampling activities:

- Water quality meter (with pH, conductivity, and dissolved-oxygen meters)
- Turbidity meter
- Photoionization detector

Field instrument calibration and preventative maintenance will follow the manufacturers' guidelines, and deviations from the established guidelines will be documented.

7.7.1.1 Field Calibration

Generally, field instruments should be calibrated daily before work begins. Field personnel may decide to calibrate more than once a day if inconsistent or unusual readings occur, or if conditions warrant more frequent calibration. Calibration activities should be recorded in field notebooks. The following procedures will be followed to ensure that field instruments are properly calibrated and remain operable:

- Operation, maintenance, and calibration will be performed in accordance with the instrument manufacturers' specifications.
- Standards used to calibrate field instruments will meet the minimum requirements for source and purity recommended in the equipment operation manual. Standards will be checked for expiration dates that may be printed on the bottle. Standards that have expired should not be used.
- Acceptable criteria for calibration will be based on the limits set in the operations manual.
- Users of the equipment should be trained in the proper calibration and operation of the instrument.

Provided to Builders Exchange of WA, Inc. For usage Conditions Agreement see www.bxwa.com - Always Verify Scal

- Operation and maintenance manuals for each field instrument should be available to persons using the equipment.
- Field instruments will be inspected before they are taken to the Property.
- Calibration procedures (including items such as time, standards used, and calibration results) should be recorded in a field notebook. The information should be available if problems are encountered.

7.7.1.2 Preventative Maintenance

Preventative maintenance of field instruments and equipment will follow the operations manuals. A schedule of preventative-maintenance activities should be followed to minimize downtime and ensure the accuracy of measurement systems.

7.7.2 Laboratory Instrumentation

Specific laboratory instrument calibration procedures, frequency of calibration, and preparation of calibration standards will be according to the method requirements developed by the EPA, following procedures presented in SW-846 (EPA 2015).

7.7.2.1 Laboratory Calibration and Preventative Maintenance

The laboratory calibration ranges specified in SW-846 will be followed (EPA 2015). Preventative maintenance of laboratory equipment will be the responsibility of the laboratory personnel and analysts. This maintenance includes routine care and cleaning of instruments and inspection and monitoring of carrier gases, solvents, and glassware used in analyses. The preventative-maintenance approach for specific equipment should follow the manufacturers' specifications, good laboratory practices, and industry-standard techniques.

Precision and accuracy data will be examined for trends and excursions beyond control limits to determine evidence of instrument malfunction. Maintenance should be performed when an instrument begins to change, as indicated by the degradation of peak resolution, shift in calibration curves, decrease in sensitivity, or failure to meet the QC criteria.

7.8 Laboratory QA/QC Samples

The laboratory QC samples will be used to assess the accuracy and precision of the laboratory analysis. Each category of laboratory QA/QC will be performed by the laboratory as required by method-specific guidelines. The acceptance criteria presented in the guidelines will be adhered to, and samples that do not meet the criteria will be reanalyzed or qualified, as appropriate.

7.8.1 Calibration Verification

Instruments will initially be calibrated at the start of the project or sample run, as required, and when any ongoing calibration does not meet control criteria. The number of points used in the initial

Provided to Builders Exchange of WA, Inc. For usage Conditions Agreement see www.bxwa.com - Always Verify Scal

calibration is defined in the analytical method. Calibration will be continued as specified in the analytical method to track instrument performance. If a continuing calibration does not meet control limits, analysis of project samples will be suspended until the source of the control failure is either eliminated or reduced to within control specifications.

7.8.2 Matrix Spike/Matrix Spike Duplicate

MS samples are analyzed to assess the matrix effects on the accuracy of analytical measurements. MS/MSD samples will be prepared by spiking investigative samples with known amounts of analytes before extraction and preparation and analysis. The recoveries for the MS/MSD samples will be used to assess the accuracy and precision in the analytical method by measuring how well the analytical method recovers the target compounds in the investigative matrices. For each matrix type, at least one set of MS/MSD samples will be analyzed for each batch of samples (consisting of 20 or fewer samples) received.

7.8.3 Method Blanks

Method blanks are prepared using analyte-free (reagent) water and are processed with the same methodology (e.g., extraction, digestion) as the associated investigative samples. Method blanks are used to document contamination resulting in the laboratory from the analytical process. A method blank shall be prepared and analyzed with every analytical batch. The method blank results are used to verify that reagents and preparation do not impart unacceptable bias to the investigative sample results. The presence of analytes in the method blank sample will be evaluated against method-specific thresholds. If analytes are present in the method blank above the method-specific threshold, corrective action will be taken to eliminate the source of contamination before proceeding with analysis. Investigative samples of an analytical batch associated with method blank results outside acceptance limits will be appropriately qualified by the data validator.

7.8.4 Laboratory Control Samples

LCSs are prepared by spiking laboratory-certified, reagent-grade water with the analytes of interest or a certified reference material that has been prepared and analyzed. The result for percent recovery of the LCS is a data quality indicator of the accuracy of the analytical method and laboratory performance.

7.8.5 Laboratory Duplicate Samples

Laboratory duplicate samples (LDSs) are prepared by the laboratory by splitting an investigative sample into two separate aliquots and performing separate sample preparation and analysis on each aliquot. The results for relative percent difference of the primary investigative sample and the respective LDSs are used to measure precision in the analytical method and laboratory performance. For nonaqueous matrices, sample heterogeneity may affect the measured precision for the LDSs.

7.9 Field QC

The following samples will be submitted to the laboratory for analysis:

Provided to Builders Exchange of WA, Inc. For usage Conditions Agreement see www.bxwa.com - Always Verify Scal

- Trip Blanks—A trip blank monitors the potential for sample contamination during sample collection and transport. A trip blank consists of reagent-grade water in a new sample container, which is prepared at the same time as the sample containers. The trip blank will accompany the samples throughout collection, shipment, and storage. At least one trip blank will be included with each cooler in which samples for VOC analyses are stored.
- Field Duplicates—Field duplicates are collected to measure sampling and laboratory precision. At least one duplicate sample will be collected for every 20 samples.

It is not anticipated that nondisposable equipment will be used at the Property during compliance monitoring; however, if such equipment is used, equipment rinsate blanks should be collected as follows:

- Equipment Rinsate Blanks—To ensure that decontamination procedures are sufficient, an equipment rinsate blank will be collected when nondedicated, nondisposable equipment is used. At least one equipment rinsate blank will be collected for every 20 samples collected. If more than 20 samples are collected with the same equipment, or if high concentrations of contaminants are encountered, additional equipment rinsate blanks may be collected. Equipment rinsate blank collection consists of passing laboratory deionized/distilled water through or over nondisposable sampling equipment.

7.10 Data Reduction, Validation, and Reporting

The analytical laboratory will submit analytical data packages that include laboratory QA/QC results to permit independent and conclusive determination of data quality. Data quality will be determined by MFA, using the data evaluation procedures described in this section. The results of the MFA evaluation will be used to determine if the data quality objectives are being met.

7.10.1 Field Data Reduction

Daily internal QC checks will be performed for field activities. Checks will consist of reviewing field notes and field activity memoranda to confirm that the specified measurements, calibrations, and procedures are being followed. The need for corrective action will be assessed on an ongoing basis, in consultation with the project manager.

7.10.2 Laboratory Evaluation

Initial data reduction, evaluation, and reporting at the analytical laboratory will be carried out as described in SW-846 (EPA 2015), as appropriate. Additional laboratory data qualifiers may be defined and reported to further explain the laboratory's QC concerns about a particular sample result. Additional data qualifiers will be defined in the laboratory's case narrative reports.

Provided to Builders Exchange of WA, Inc. For usage Conditions Agreement see www.bxwa.com - Always Verify Scal

7.10.3 Data Deliverables

Laboratory data deliverables are listed below. Electronic data deliverables will contain the same data are presented in the hard-copy report.

- Transmittal cover letter
- Case narrative
- Analytical results
- Chain-of-custody
- Surrogate recoveries
- Method blank results
- MS/MSD results
- LDS results

7.10.4 Internal Data Evaluation

7.10.4.1 Data QA/QC Review

MFA will evaluate the laboratory data for precision, completeness, accuracy, and compliance with the analytical method. MFA will review data according to applicable sections of EPA organics and inorganics procedures (EPA 2017a,b), as well as appropriate method-specific guidelines (EPA, 2015).

Data qualifiers, as defined by the EPA, are used to classify sample data according to their conformance to QC requirements. Common qualifiers are listed below:

- J—Estimated, qualitatively correct but quantitatively suspect.
- R—Rejected, data not suitable for any purpose.
- U—Not detected at a specified reporting limit.

Poor surrogate recovery, blank contamination, or calibration problems, among other things, can require qualification of the data. When sample data are qualified, the reasons for the qualification will be stated in the data evaluation report.

QC criteria not defined in the guidelines for evaluating analytical data are adopted, where appropriate, from the analytical method.

The following information will be reviewed during data evaluation, as applicable:

- Sampling locations and blind sample numbers
- Sampling dates
- Requested analyses
- Chain-of-custody documentation
- Sample preservation
- Holding times

Provided to Builders Exchange of WA, Inc. For usage Conditions Agreement see www.bxwa.com - Always Verify Scal

- Method blanks
- Surrogate recoveries
- MS/MSD results
- LDSs, if analyzed
- Field duplicates
- Field blanks
- LCSs
- Method reporting limits above requested levels
- Additional comments or difficulties reported by the laboratory
- Overall assessment

The results of the data evaluation review will be summarized for each data package. Data qualifiers will be assigned to sample results on the basis of EPA guidelines, as applicable.

7.10.4.2 Data Management and Reduction

MFA uses a database (e.g., EQuIS™) to manage laboratory data. The laboratory will provide the analytical results in electronic, EQuIS-compatible format. Following data evaluation, data qualifiers will be entered into the database.

Data may be reduced to summarize particular data sets and to aid interpretation of the results. Statistical analyses may also be applied to results. Data reduction QC checks will be performed on hand-entered data, calculations, and data graphically displayed. Data may be further reduced and managed using one or more of the following applications:

- Microsoft® Excel® (spreadsheet)
- EQuIS™ (database)
- Microsoft Access® (database)
- AutoCAD® and/or ESRI® ArcGIS (graphics)
- EPA ProUCL (statistical software)

The data validation memoranda will provide a review of all raw data to verify that the laboratory has performed and documented the required quality assurance and quality control deliverables. The data will be validated against EPA, Washington State, and laboratory-specific criteria for completeness and data usability.

8 REPORTING

Groundwater monitoring reports will be prepared in accordance with Ecology requirements (WAC 173-340-840[5]). Monitoring reports will provide a description of sampling methodologies and field activities, analytical data, analytical laboratory reports and associated chains of custody, field

Provided to Builders Exchange of WA, Inc. For usage Conditions Agreement see www.bxwa.com - Always Verify Scal

measurements of groundwater quality parameters and water levels, a discussion of analytical data trends, a comparison of analytical results to selected MTCA CULs, and data validation memoranda. Any deviations from this CMP will be explained. All final, validated data will be uploaded to Ecology's Environmental Information Management database within 30 days.

9 SCHEDULE

The groundwater monitoring activities outlined in this CMP will begin at least six months following completion of the 2022/2023 remedial action and will continue for four consecutive quarters. This CMP will be reevaluated after completion of four quarterly groundwater monitoring events.

The frequency and sampling schedule will be reevaluated after four consecutive quarters.

Provided to Builders Exchange of WA, Inc. For usage Conditions Agreement see www.bxwa.com - Always Verify Scal

LIMITATIONS

The services undertaken in completing this report were performed consistent with generally accepted professional consulting principles and practices. No other warranty, express or implied, is made. These services were performed consistent with our agreement with our client. This report is solely for the use and information of our client unless otherwise noted. Any reliance on this report by a third party is at such party's sole risk.

Opinions and recommendations contained in this report apply to conditions existing when services were performed and are intended only for the client, purposes, locations, time frames, and project parameters indicated. We are not responsible for the impacts of any changes in environmental standards, practices, or regulations subsequent to performance of services. We do not warrant the accuracy of information supplied by others, or the use of segregated portions of this report.

Provided to Builders Exchange of WA, Inc. For usage Conditions Agreement see www.bxwa.com - Always Verify Scal

REFERENCES

Ecology. 1995. *Guidance on sampling and data analysis methods. Publication No. 94-49*. Washington State Department of Ecology Toxics Cleanup Program. January.

Ecology. 2004. *Guidance for preparing quality assurance project plans for environmental studies. Publication No. 04-03-030*. Washington State Department of Ecology. July.

EPA. 2015. *Test methods for evaluating solid waste, physical/chemical methods*. EPA Publication SW-846., update V. U.S. Environmental Protection Agency. August.

EPA. 2017a. *EPA contract laboratory program, national functional guidelines for inorganic Superfund methods data review. EPA 540-R-2017-001*. U.S. Environmental Protection Agency, Office of Superfund Remediation and Technology Innovation. January.

EPA. 2017b. *EPA contract laboratory program, national functional guidelines for Superfund organic methods data review. EPA 540-R-2017-002*. U.S. Environmental Protection Agency, Office of Superfund Remediation and Technology Innovation. January.

MFA. 2021a. *Supplemental Investigation and Cleanup Options Report, Sebranke Property, Stanwood, Washington, Grant Agreement No. OTGP-2021-STANWO-00043*. Prepared for the City of Stanwood. Maul Foster & Alongi, Inc.: Bellingham, WA. June 24.

MFA. 2022. *Engineering Design Report, Sebranke Property, Stanwood, Washington*. Prepared for the City of Stanwood. Maul Foster & Alongi, Inc.: Bellingham, WA. September 13

Provided to Builders Exchange of WA, Inc. For usage Conditions Agreement see www.bxwa.com - Always Verify Scal

TABLE



Provided to Builders Exchange of WA, Inc. For usage Conditions Agreement see www.bxwa.com - Always Verify Scal

Table 7-1
Sampling and Analyses Summary
Sebranke Property
Stanwood, Washington

Analyte	Method	Suggested Volume	Container	Number of Containers	Preservative	Storage Temperature	Holding Time
Diesel- and lube-oil-range organics	NWTPH-Dx	500 ml	Amber Glass	2	HCl pH < 2	4°C	14 days
BTEX	EPA 8260	40 ml	VOA	3	HCl pH < 2	4°C	14 days

NOTES:

°C = degrees Celsius.

ASTM = ASTM International.

BTEX = benzene, toluene, ethylbenzene, xylenes.

cPAHs = carcinogenic polycyclic aromatic hydrocarbons.

EPA = U.S. Environmental Protection Agency.

HCl = hydrochloric acid.

ml = milliliter.

NA = not applicable.

NWTPH = Northwest Total Petroleum Hydrocarbons.

SIM = selected ion monitoring.

VOA = volatile organic analysis vial.

© 2023 Maul Foster Alongi, Inc.

Provided to Builders Exchange of WA, Inc. For usage Conditions Agreement see www.bxwa.com - Always Verify Scal

FIGURES



Provided to Builders Exchange of WA, Inc. For usage Conditions Agreement see www.bxwa.com - Always Verify Scal

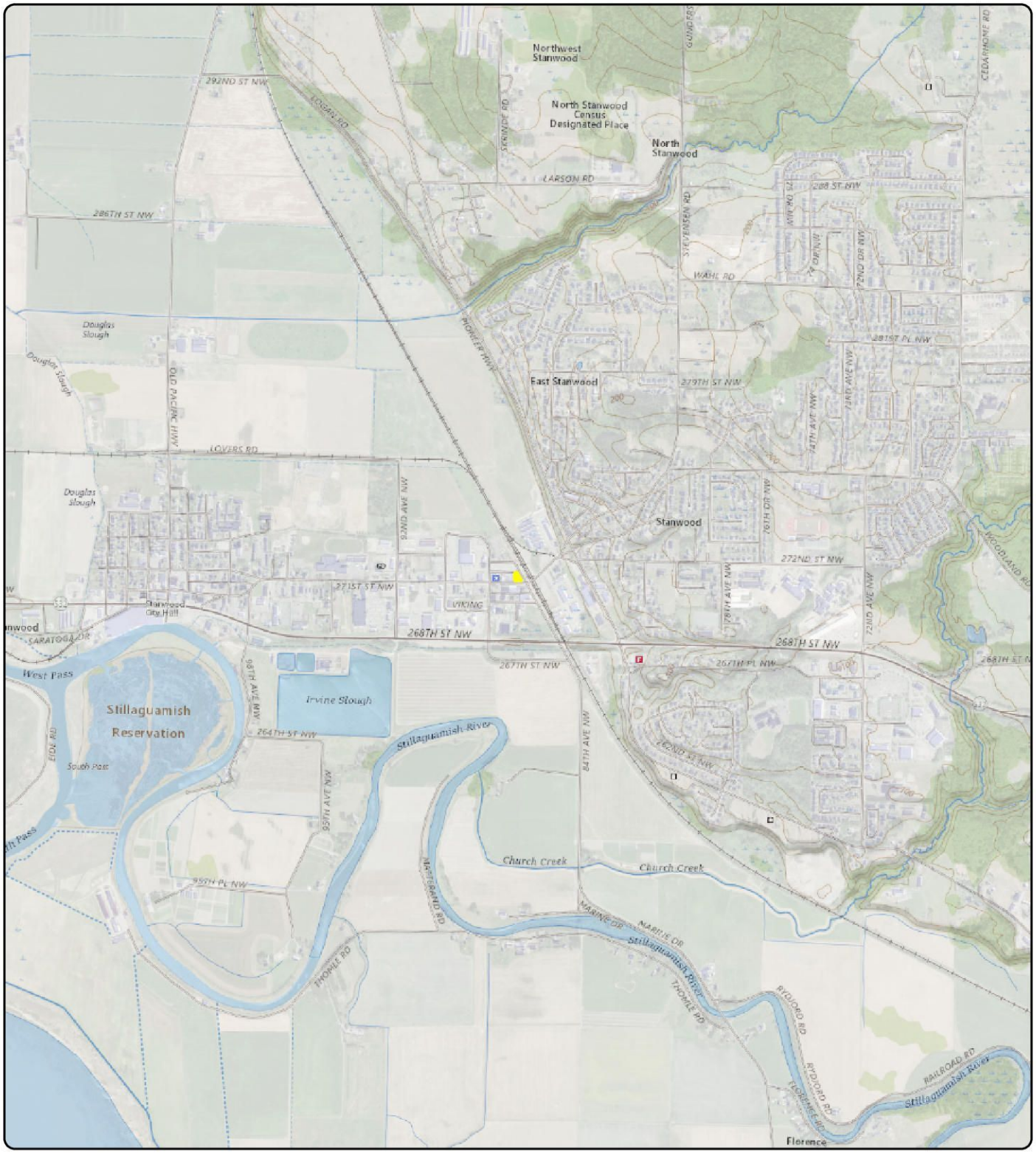

Notes
Property parcels: 00432400101500 and 00432400101400 .
US Geological Survey (2020) 7.5-minute topographic quadrangle: Stanwood.
Township 32 north, range 4 east, section 19.

Data Source
Property boundary obtained from Snohomish County.

Legend

Property Boundary

Figure 1-1
Property Location

Sebranke Property
Stanwood, Washington

0 1,000 2,000
Feet

MAUL FOSTER ALONGI
p. 971 544 2139 | www.maulfoster.com

This product is for informational purposes and may not have been prepared for, or be suitable for legal, engineering, or surveying purposes. Users of this information should review or consult the primary data and information sources to ascertain the usability of the information.
© 2023 Maul Foster & Alongi, Inc.

Path: X:\1030.02_06\Pro\M1030_02_006_002.aprx\Fig 1-1 Property Location
Print Date: 4/28/2023
Reviewed By: cwise
Produced By: stumer
Project: M1030.02.006

Provided to Builders Exchange of WA, Inc. For usage Conditions Agreement see www.bxwa.com - Always Verify Scal



Notes
All features are approximate.
ESA = environmental site assessment.

Data Sources
Parcels obtained from Snohomish County; aerial photograph obtained from Esri; historical features were digitized from a 1953 Sanborn Fire Insurance Map.

MAUL FOSTER ALONGI
p. 971 544 2139 | www.maulfoster.com

This product is for informational purposes and may not have been prepared for, or be suitable for legal, engineering, or surveying purposes. Users of this information should review or consult the primary data and information sources to ascertain the usability of the information.
© 2023 Maul Foster & Alongi, Inc.

Legend

- Proposed Monitoring Well
- Monitoring Well
- Utility Pole
- Property Parcel
- Snohomish County Parcel

Historical Features

- Filling station
- Auto parts
- Auto repair
- Auto grease & Oil Storage

Figure 5-1
Monitoring Well Locations

Sebranke Property
Stanwood, Washington

0 20 40
Feet

Path: X:\1030.02_06\Figure5_1_Monitoring_Well_Locations.mxd
Print Date: 5/9/2023
Reviewed By: cwise
Produced By: sturner
Project: M1030.02.006

Provided to Builders Exchange of WA, Inc. For usage Conditions Agreement see www.bxwa.com - Always Verify Scal

MAUL FOSTER ALONGI
114 W Magnolia Street, Suite 500 | Bellingham, WA 98225 | 360 594 6262 | www.maulfoster.com

September 12, 2025
Project No. M1030.02.006

Michelle Huber
Underground Storage Tank Inspector
Washington State Department of Ecology

Re: Underground Storage Tank Site Assessment
Sebranke Property
8627 271st Street NW, Stanwood, Washington
Facility Site ID: 74354, Cleanup Site ID: 15464

Dear Michelle Huber:

On behalf of the City of Stanwood (the City), Maul Foster & Alongi, Inc. (MFA), conducted an underground storage tank (UST) site assessment in support of the permanent closure of an approximately 750-gallon UST located at the Sebranke property, 8627 271st Street NW in Stanwood, Washington (the Property) (see Figure 1). The Property is listed under Ecology Cleanup Site ID: 15464 and is currently enrolled in the Voluntary Cleanup Program (NW3322). MFA prepared this site assessment report to describe UST decommissioning and site assessment activities. This site assessment was performed by Christian Sifford of MFA, an ICC certified site assessor in Washington State (license no. 10185106) consistent with Washington Administrative Code 173-360A-0930(3) and Section 1.1 of the Washington State Department of Ecology (Ecology) Site Assessment Guidance for UST Systems (Ecology 2022).

Background

The approximately 0.11-acre Property is located in downtown Stanwood, Washington in section 19, township 32 north, range 4 east of the Willamette Meridian, on Snohomish County tax lots 00432400101500 and 00432400101400 (see Figure 2). The Property is zoned "Mainstreet Business with a Transit Overlay" and is currently an undeveloped vacant lot with a grassy surface. In general, the Property is relatively flat and level.

Based on documented historical uses and data obtained during previous investigations, it appears that historical auto repair operations on the Property and off-property migration of contamination from an adjoining former filling station may have contributed to contamination at the Property.

Several environmental investigations completed at the Property identified chemicals of concern in soil and groundwater (MFA 2016, 2021a,b). A remedial action was completed in December 2022, during which an approximately 850-gallon UST (referred to as UST 1 in this report) was encountered during excavation activities, and was decommissioned in place, as described in the completion report (MFA 2023a). UST 1 was not in use and was filled with groundwater upon discovery. No information regarding the UST's tank number, date of installation, or historical use was documented or known. No free product or significant odors or staining were observed within or adjacent to UST 1 during its discovery and closure.

During monitoring well installation following the remedial action, an underground feature was encountered. Additional assessment was conducted of the underground feature via potholing, and it

© 2025 Maul Foster & Alongi, Inc.

Provided to Builders Exchange of WA, Inc. For usage Conditions Agreement see www.bxwa.com - Always Verify Scal

was determined to be a second UST (referred to as UST 2 in this report). UST 2 was closed in place, and a site assessment was performed, as described in further detail below.

UST Discovery

On August 30, 2023, during monitoring well installation activities conducted in accordance with the compliance monitoring plan (MFA 2023b). MFA identified a void space at one of the drilling locations and backfilled the boring with bentonite until additional assessment of the feature could be conducted. No free product, staining, or odors were observed from the abandoned boring at the time of drilling.

On August 11, 2025, MFA oversaw a potholing excavation in the vicinity of the abandoned boring location. Potholing was completed using a mini excavator operated by Wyser Construction of Snohomish, Washington. Prior to excavation activities, public and private utility locates were completed on the Property. Potholing identified steel piping and the top of a north-northwest to south-southeast oriented UST (UST 2) at approximately 3.5 feet below ground surface (bgs). All piping observed was located immediately above the extent of UST 2.

Upon discovery, UST 2 was full of water with a slight sheen. The UST was partially overlain with a wooden log. Some rust holes were observed in the top of the tank. The soil overlying the UST was generally a sandy gravel with angular cobbles. The soil immediately adjacent to the UST was generally a silty fine to medium sand which exhibited a slight petroleum hydrocarbon-like odor. Some wood and glass debris was observed intermixed with the two soil units. The material removed from the excavation was stockpiled on and covered with plastic sheeting.

Upon identification of the UST, MFA notified Ecology and requested a waiver for the 30-Day Notice to decommission the UST in place due to the unstable soils and the potential undermining of a large power pole on the Property. The 30-Day Notice and waiver documentation are provided in Attachment B. UST 2 is located immediately north and generally perpendicular to the previously decommissioned UST on the Property (UST 1). UST 2 is an approximately 750-gallon single-walled steel tank, approximately 4 feet in diameter and 8 feet in length, with no secondary containment structures. No information regarding the tank number, date of installation, or historical use was documented or known of UST 2.

Decommissioning

On August 14, 2025, MFA oversaw the in-place decommissioning of UST 2 completed by Wyser Construction. The top of the UST was pried open using the excavator bucket and the water in the tank was pumped out and triple rinsed by Marine Vacuum Service, Inc., of Seattle, Washington. A total of 800 gallons of groundwater and rinse water was removed from the tank and disposed of offsite. No groundwater was observed entering the excavation or emptied tank.

Once emptied and triple rinsed, the UST was filled with 4 cubic yards of controlled density fill by Stanwood Redi-Mix of Stanwood, Washington. The product line and vent piping (two approximately 3-foot sections) were removed from the top of the tank. The steel piping was disposed of offsite as solid waste. The stockpiled soil removed from overlying the UST was used as backfill and compacted. The filled excavation was covered with a layer of topsoil and grass seed. The UST Permanent Closure Notice and supporting documentation is provided in Attachment B.

© 2025 Maul Foster & Alongi, Inc.

Provided to Builders Exchange of WA, Inc. For usage Conditions Agreement see www.bxwa.com - Always Verify Scal

Site Assessment

On August 18, 2025, UST site assessment activities were completed in accordance with Ecology's Site Assessment Guidance for Underground Storage Tank Systems (Ecology 2022). MFA oversaw the advancement of three borings (GP11 through GP13) approximately 1-foot from the ends and sides of UST 2 for soil observation and sample collection (see Figure 3). The borings were advanced by direct push with continuous core retrieval by a Washington state licensed driller from Anderson Environmental Contracting of Kelso, Washington.

Geologic boring logs are provided in Attachment A and include observations of odors, photoionization detector (PID) soil vapor headspace screening results, lithologic descriptions, and sample collection depths. Soils encountered in these borings consisted of gravelly sand to sandy gravel within the upper 1.5 feet bgs. This was underlain by a heterogenous mix of sandy silty gravel, sandy silt, gravelly sand, lean clay, sandy clay with gravel, and peat to 5.8 to 6.3 feet bgs. Some small fragments of glass and woody debris were encountered near the base of these units, suggesting these units are fill. The fill was generally underlain by peat followed by lean clay. Only a few observations of a slight petroleum hydrocarbon-like odor were encountered during drilling. PID readings were low and often not colocated with an observed odor, suggesting potential interferences to the meter from moisture or overhead power poles.

Soil Sampling

Soil samples were collected from each boring at depths meeting one or more of the following criteria:

- Soils exhibiting a petroleum hydrocarbon-like odor
- Soils located just above the capillary fringe
- Soils exhibiting elevated PID reading
- Soils located at the depth of the bottom of the tank (approximately 7.5 feet bgs)

Intervals of peat were not sampled to avoid significant matrix interferences from naturally occurring organic material. The sample containers were labeled, placed on ice, and shipped under standard chain of custody procedures to Friedman and Bruya, Inc., of Seattle, Washington for chemical analysis.

Analytical Methods

The soil samples were submitted for initial analysis of petroleum hydrocarbon identification (HCID) by NWTPH-HCID with sample volume held for analysis of the chemicals specified in MTCA Table 830-1 Required Testing for Petroleum Hydrocarbon Releases. The analytical laboratory report is provided in Attachment C. An MFA chemist conducted an independent review of the analytical data and the laboratory's internal quality assurance and quality control data to assess whether they met project-specific data quality objectives. The data are considered acceptable for their intended use, with appropriate data qualifiers assigned.

Analytical Results

No petroleum hydrocarbons were detected in soil above laboratory method reporting limits (see Table 1). These results, along with the general lack of observed indications of impacts to soil encountered during the site assessment and decommissioning of the UST, suggest that UST 2 was

© 2025 Maul Foster & Alongi, Inc.

Provided to Builders Exchange of WA, Inc. For usage Conditions Agreement see www.bxwa.com - Always Verify Scal

empty when it was abandoned and that no significant releases of petroleum product have occurred in association with the former operation of UST 2.

Conclusions

Confirmation soil samples collected from the borings are non-detect for petroleum hydrocarbons. Based on the analytical results and the lack of field indications of petroleum contamination, it is unlikely a release has occurred from UST 2, and no further characterization associated with this UST 2 is planned. Groundwater monitoring, including analysis of petroleum hydrocarbons in groundwater, is ongoing at this site under the VCP in accordance with a Compliance Monitoring Plan (MFA 2023b).

Sincerely,

Maul Foster & Alongi, Inc.



Christian Sifford, GIT
Project Geologist and Site Assessor



Carolyn Wise, LHG
Senior Hydrogeologist

Attachments

References

Limitations

Figures

Table

A—Boring Logs

B—UST Documentation

C—Analytical Laboratory Report

cc: Ali Furmall, Washington State Department of Ecology

© 2025 Maul Foster & Alongi, Inc.

Provided to Builders Exchange of WA, Inc. For usage Conditions Agreement see www.bxwa.com - Always Verify Scal

References

Ecology. 2022. *Site Assessment Guidance for Underground Storage Tank Systems*. Washington State Department of Ecology, Toxics Cleanup Program: Olympia, WA, published January 2021; revised October 2022.

MFA. 2016. Heather Good and Carolyn Wise, Maul Foster & Alongi, Inc. *Limited Phase II Environmental Site Assessment, Sebranke Property, Stanwood, Washington*. Letter to R. Larsen, City of Stanwood. July 26.

MFA. 2021a. *Supplemental Investigation and Cleanup Options Report, Sebranke Property, Stanwood, Washington, Grant Agreement No. OTGP-2021-STANWO-00043*. Prepared for the City of Stanwood. Maul Foster & Alongi, Inc.: Bellingham, WA. June 24.

MFA. 2021b. *Phase I Environmental Site Assessment, Sebranke Property, Stanwood, Washington*. Prepared for the City of Stanwood. Maul Foster & Alongi, Inc.: Bellingham, WA. June 28.

MFA. 2022. *Engineering Design Report, Sebranke Property, Stanwood, Washington*. Prepared for the City of Stanwood. Maul Foster & Alongi, Inc.: Bellingham, WA. September 13.

MFA. 2023a. *Cleanup Action Completion Report, Sebranke Property, Stanwood, Washington*. Prepared for the City of Stanwood. Maul Foster & Alongi, Inc.: Bellingham, WA. June 20.

MFA. 2023b. *Groundwater Compliance Monitoring Plan, Sebranke Property, Stanwood, Washington*. Prepared for the City of Stanwood. Maul Foster & Alongi, Inc.: Bellingham, WA. June 20.

© 2025 Maul Foster & Alongi, Inc.

Provided to Builders Exchange of WA, Inc. For usage Conditions Agreement see www.bxwa.com - Always Verify Scal

Limitations

The services undertaken in completing this report were performed consistent with generally accepted professional consulting principles and practices. No other warranty, express or implied, is made. These services were performed consistent with our agreement with our client. This report is solely for the use and information of our client unless otherwise noted. Any reliance on this report by a third party is at such party's sole risk.

Opinions and recommendations contained in this report apply to conditions existing when services were performed and are intended only for the client, purposes, locations, time frames, and project parameters indicated. We are not responsible for the impacts of any changes in environmental standards, practices, or regulations subsequent to performance of services. We do not warrant the accuracy of information supplied by others, or the use of segregated portions of this report.

© 2025 Maul Foster & Alongi, Inc.

Provided to Builders Exchange of WA, Inc. For usage Conditions Agreement see www.bxwa.com - Always Verify Scal

Figures

MAUL
FOSTER
ALONGI

Provided to Builders Exchange of WA, Inc. For usage Conditions Agreement see www.bxwa.com - Always Verify Scal

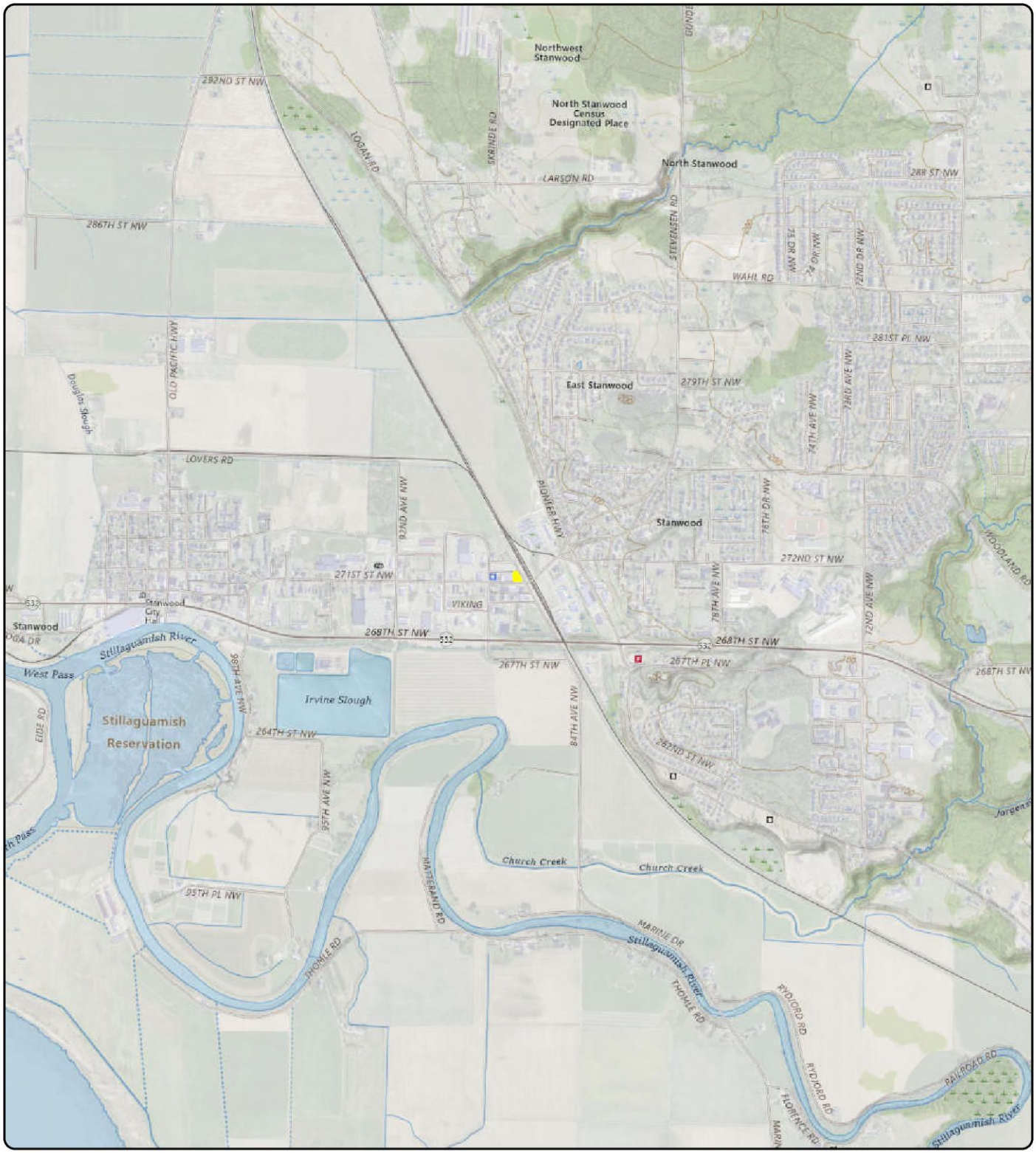

Notes
Property parcels: 00432400101500 and 00432400101400.
U.S. Geological Survey 7.5-minute topographic quadrangle: Stanwood.
Township 32 north, range 4 east, section 19.

Data Source
Property boundary obtained from Snohomish County.

Legend

Property Boundary

Figure 1
Property Location

Sebranke Property
Stanwood, Washington

0 2,000
Feet

MAUL FOSTER ALONGI
p. 971 544 2139 | www.maulfoster.com

This product is for informational purposes and may not have been prepared for, or be suitable for legal, engineering, or surveying purposes. Users of this information should review or consult the primary data and information sources to ascertain the usability of the information.
© 2025 Maul Foster & Alongi, Inc.

Path: X:\1030.02_06\Pro\M1030_02_006_003.aprx\Fig 1-1 Property Location
Print Date: 9/5/2025
Reviewed By: clifford
Produced By: ielstrott
Project: M1030.02.006-003

Provided to Builders Exchange of WA, Inc. For usage Conditions Agreement see www.bxwa.com - Always Verify Scal



Legend

- Monitoring Well
- Utility Pole
- Property Parcel
- Snohomish County Parcel

Figure 2
Property Features

Sebranke Property
Stanwood, Washington

Data Source
Aerial photo and parcel data obtained from Snohomish County.

MAUL FOSTER ALONGI
p. 971 544 2139 | www.maulfoster.com

This product is for informational purposes and may not have been prepared for, or be suitable for legal, engineering, or surveying purposes. Users of this information should review or consult the primary data and information sources to ascertain the usability of the information.
© 2025 Maul Foster & Alongi, Inc.

0 10 20
Feet

Path: X:\1030.02_06\Pro\M1030_02_006_003.aprx\Fig2 Property Features
Print Date: 9/12/2025
Reviewed By: bmurphy
Produced By: sturner
Project: M1030.02.006

Provided to Builders Exchange of WA, Inc. For usage Conditions Agreement see www.bxwa.com - Always Verify Scal

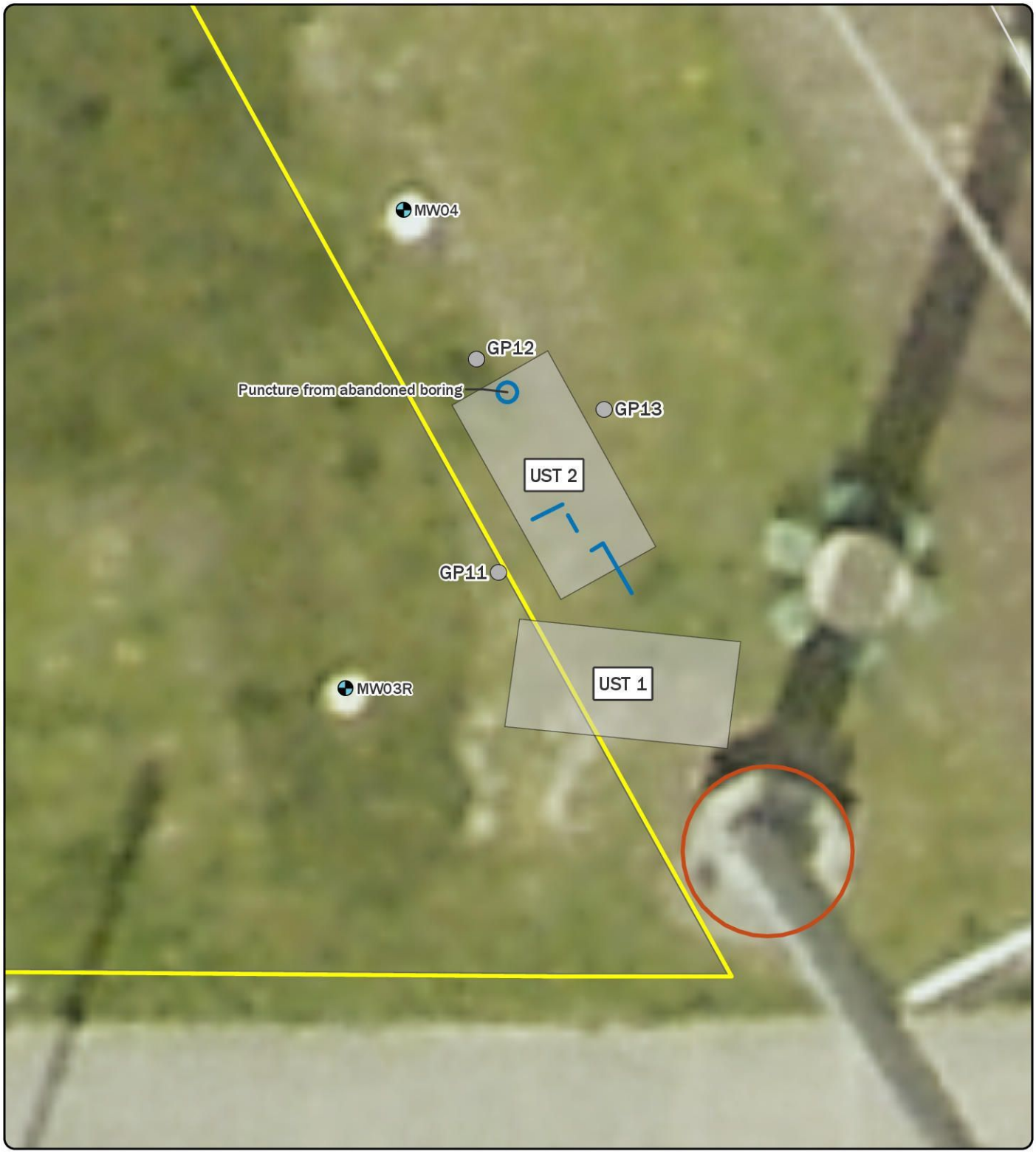

Notes
All features are approximate.

Data Source
Aerial photo and parcel data obtained from Snohomish County.

MAUL FOSTER ALONGI
p. 971 544 2139 | www.maulfoster.com

This product is for informational purposes and may not have been prepared for, or be suitable for legal, engineering, or surveying purposes. Users of this information should review or consult the primary data and information sources to ascertain the usability of the information.
© 2025 Maul Foster & Alongi, Inc.

Legend

- Monitoring Well
- Soil Boring
- Hole
- Pipe
- Utility Pole
- Property Parcel
- Snohomish County Parcel

Figure 3
Underground Storage Tank Features and Soil Sample Locations

Sebranke Property
Stanwood, Washington

0 2.5 5
Feet

Path: X:\1030.02_06\Pro\M1030_02_006_003.aprx\Fig 3 UST Features and Soil Sample Locations
Print Date: 9/12/2025
Reviewed By: bmurphy
Produced By: sturner
Project: M1030.02.006

Provided to Builders Exchange of WA, Inc. For usage Conditions Agreement see www.bxwa.com - Always Verify Scal

BXWA

Table

MAUL
FOSTER
ALONGI

Provided to Builders Exchange of WA, Inc. For usage Conditions Agreement see www.bxwa.com - Always Verify Scal

Table 1
Soil Hydrocarbon Identification Results
UST Site Assessment
Sebranke Property

Location:	GP11	GP12	GP13
Sample Name:	GP11-S-6.0	GP12-S-7.0	GP13-S-7.5
Collection Date:	08/18/2025	08/18/2025	08/18/2025
Collection Depth (ft bgs):	6.0	7.0	7.5
Hydrocarbon Identification (detect/non-detect)			
Gasoline	ND	ND	ND
Diesel	ND	ND	ND
Heavy Oil	ND	ND	ND

Notes

ft bgs = feet below ground surface.

ND = non-detect.

UST = underground storage tank.

© 2025 Maul Foster Alongi, Inc.

Provided to Builders Exchange of WA, Inc. For usage Conditions Agreement see www.bxwa.com - Always Verify Scal

Attachment A

Boring Logs

MAUL FOSTER ALONGI

Provided to Builders Exchange of WA, Inc. For usage Conditions Agreement see www.bxwa.com - Always Verify Scal

SOIL BORING GP-11

MAUL FOSTER ALONGI

SHEET 1 OF 1

Project Number: M1030.02.006
Project Name: Sebranke UST Site Assessment
Project Location: 8627 271st St NW, Stanwood, WA
Date Started: 08/18/2025 Completed: 08/18/2025
Logged By: C. Sifford

Surface Elevation: N/A
Boring Location: North: - East: -
Drill Rig: Direct Push (Anderson Environmental Contracting)
Completion Depth: 10.0'

Depth (feet)	Water Levels	Soil Description and Remarks	Graphic Log	Samples: % Recovery	Samples: Sample ID	Samples: PID (ppm)
0		0 to 1.3 feet: GRAVELLY SAND (SP); brown; 60% sand, medium grained; 40% gravel, fine to coarse; very loose; some woody debris; no odor; moist.		48		1
1						17
		1.3 to 1.7 feet: PEAT; brown; soft; 100% peat; no odor; moist.				
2		1.7 to 2.4 feet: LEAN CLAY (CL); gray; 100% fines, medium to high plasticity; soft; slight petroleum-like odor; moist.				1
		2.4 to 5.0 feet: NO RECOVERY.				
3						
4						
5		5 to 5.3 feet: LEAN CLAY (CL); gray; 100% fines, medium to high plasticity; soft; slight petroleum-like odor; moist.		36		4
		5.3 to 5.6 feet: PEAT; brown; soft; 100% peat; no odor; moist.				
6		5.6 to 6.3 feet: SANDY LEAN CLAY WITH GRAVEL (CL); gray; 60% fines, medium to high plasticity; 30% sand, medium grained; 10% gravel, medium, rounded; medium dense; slight petroleum-like odor; moist.			GP08-S-6.0	3
7		6.3 to 6.8 feet: LEAN CLAY (CL); gray; 100% fines, medium to high plasticity; soft; no odor; moist.				
		6.8 to 10.0 feet: NO RECOVERY.				
8						
9						
10						

DRAFT

Notes
1) Encountered hard drilling at 4 feet bgs. Reattempted 1 foot to the north. 2) Depths are relative to feet below ground surface. 3) bgs = below ground surface.

Borehole Completion Details
0.0 to 10.0 feet bgs: 4-inch borehole.

Borehole Abandonment Details
0.0 to 10 feet bgs: Bentonite chips hydrated with potable water.

Provided to Builders Exchange of WA, Inc. For usage Conditions Agreement see www.bxwa.com - Always Verify Scal

SOIL BORING GP-12

MAUL FOSTER ALONGI

Project Number: M1030.02.006
Project Name: Sebranke UST Site Assessment
Project Location: 8627 271st St NW, Stanwood, WA
Date Started: 08/18/2025 Completed: 08/18/2025
Logged By: C. Sifford

Surface Elevation: N/A
Boring Location: North: - East: -
Drill Rig: Direct Push (Anderson Environmental Contracting)
Completion Depth: 10.0'

Depth (feet)	Water Levels	Soil Description and Remarks	Graphic Log	Samples: % Recovery	Samples: Sample ID	Samples: PID (ppm)
0		0 to 1.4 feet: GRAVELLY SAND (SP); brown; 60% sand, fine to medium grained; 40% gravel, fine to coarse, subangular to rounded; very loose; some woody debris; no odor; dry.		30		0
1						
2		1.4 to 1.5 feet: SANDY SILT (ML); brown; 80% fines, medium plasticity; 20% sand, fine to medium grained; soft; no odor; moist. 1.5 to 5.0 feet: NO RECOVERY.				
3						
4						
5		5 to 5.5 feet: PEAT; brown; 30% fines, medium plasticity; 70% peat; soft; no odor; moist.		54		0
6		5.5 to 5.8 feet: GRAVELLY SAND (SP); tan; 60% sand, fine to medium grained; 40% gravel, fine to coarse, subangular to rounded; very loose; some woody debris; piece of glass present; no odor; dry. 5.8 to 6.4 feet: PEAT; brown; 100% peat; soft; slight petroleum-like odor; moist.				
7		6.4 to 7.7 feet: LEAN CLAY (CL); gray; 100% fines, medium to high plasticity; soft; no odor; moist.			GP09-S-7.0	0
8		7.7 to 10.0 feet: NO RECOVERY.				
9						
10						

Notes
1) Poor recovery on first attempt. Reattempted 1 foot to the west. 2) Depths are relative to feet below ground surface. 3) bgs = below ground surface.

Borehole Completion Details
0.0 to 10.0 feet bgs: 4-inch borehole.

Borehole Abandonment Details
0.0 to 10.0 feet bgs: Bentonite chips hydrated with potable water.

DRAFT

Provided to Builders Exchange of WA, Inc. For usage Conditions Agreement see www.bxwa.com - Always Verify Scal

SOIL BORING GP-13

MAUL FOSTER ALONGI

Project Number: M1030.02.006
Project Name: Sebranke UST Site Assessment
Project Location: 8627 271st St NW, Stanwood, WA
Date Started: 08/18/2025 Completed: 08/18/2025
Logged By: C. Sifford

Surface Elevation: N/A
Boring Location: North: - East: -
Drill Rig: Direct Push (Anderson Environmental Contracting)
Completion Depth: 10.0'

Depth (feet)	Water Levels	Soil Description and Remarks	Graphic Log	Samples: % Recovery	Samples: Sample ID	Samples: PID (ppm)
0		0 to 1.2 feet: SANDY GRAVEL (GW); tan; 40% sand, medium to coarse grained; 60% gravel, fine to coarse, subangular to rounded; loose; no odor; moist.		64		0
1		1.2 to 3.0 feet: SANDY SILTY GRAVEL; dark brown to dark gray; 20% fines, high plasticity; 40% sand, medium grained; 40% gravel, fine to medium, rounded; medium dense; no odor; moist.				0
2						
3		3 to 3.2 feet: LEAN CLAY (CL); gray; 100% fines, medium plasticity; soft; no odor; moist.				
4		3.2 to 5.0 feet: NO RECOVERY.				
5		5 to 5.3 feet: LEAN CLAY (CL); gray; 100% fines, medium plasticity; soft; no odor; moist.		84		
6		5.3 to 5.8 feet: SANDY SILTY GRAVEL; dark brown to dark gray; 20% fines, high plasticity; 40% sand, medium grained; 40% gravel, fine to medium, rounded; medium dense; no odor; moist.				2
7		5.8 to 7.0 feet: PEAT; dark brown; 20% fines, low plasticity; 80% peat; soft; wet.				
8		7 to 9.2 feet: LEAN CLAY (CL); gray; 100% fines, medium to high plasticity; firm; no odor; moist.			GP10-S-7.5	0
9		@ 7.8 feet: Becomes wet.				0
10		@ 8.8 to 8.9 feet: Wood.				
		9.2 to 10.0 feet: NO RECOVERY.				

Notes
1) Depths are relative to feet below ground surface. 2) bgs = below ground surface.

Borehole Completion Details
0.0 to 10.0 feet bgs: 4-inch borehole.

Borehole Abandonment Details
0.0 to 10.0 feet bgs: Bentonite chips hydrated with potable water.

DRAFT

Provided to Builders Exchange of WA, Inc. For usage Conditions Agreement see www.bxwa.com - Always Verify Scal

Attachment B

UST Documentation

MAUL FOSTER ALONGI

Provided to Builders Exchange of WA, Inc. For usage Conditions Agreement see www.bxwa.com - Always Verify Scal

DEPARTMENT OF ECOLOGY
State of Washington

30-DAY NOTICE

FOR UNDERGROUND STORAGE TANK SYSTEMS

UST ID #: N/A

County: Snohomish

This form provides Ecology 30-days' advanced notice for projects, as required by Chapter 173-360A WAC. Instructions are on the back page.

Please ✓ the appropriate box: ☐ Intent to Install ☒ Intent to Close ☐ Change-in-Service

I. SITE INFORMATION	II. OWNER/OPERATOR INFORMATION
Tag or UBI # (if applicable): CSID: 15464	Owner/Operator Name: City of Stanwood
UST ID # (if applicable): N/A	Business Name:
Site Name: Sebranke Property	Mailing Address: 10220 270th Street NW
Site Address: 8627 271ST NW	City: Stanwood State: WA Zip: 98292
City: Stanwood	Phone:
Phone:	Email:

III. CERTIFIED SERVICE PROVIDER(S)

Check the appropriate boxes. If more than one service provider is required for this project, fill out both sections.

Note: Individuals performing UST services MUST be ICC-certified or have passed another qualifying exam approved by the Department of Ecology.

1) ☐ Installer ☒ Decommissioner ☐ Site Assessor

Company Name: Wyser Construction	Certification Type: ICC UST Decommissioner
Service Provider Name: Mike Redford	Cert. No.: 873136 Exp. Date: 4/5/27
Provider Phone: 206-200-8666	Provider Email: dan@wyserdirt.com

2) ☐ Installer ☐ Decommissioner ☒ Site Assessor

Company Name: Maul Foster & Alongi, Inc.	Certification Type: ICC Washington State Site Assessor
Service Provider Name: Christian Sifford	Cert. No.: 10185106 Exp. Date: 3/12/27
Provider Phone: 541-391-3652	Provider Email: csifford@maulfoster.com

IV. TANK AND/OR PIPING INFORMATION

TANK ID	TANK CAPACITY	SUBSTANCE STORED	PIPING INSTALLATION OR REPLACEMENT ONLY (Y/N)	DATE PROJECT IS EXPECTED TO BEGIN	COMMENTS
2	750 gallons	Unknown	N	8/13/25	

Provided to Builders Exchange of WA, Inc. For usage Conditions Agreement see www.bxwa.com - Always Verify Scal

30-DAY NOTICE

FOR UNDERGROUND STORAGE TANK SYSTEMS

GENERAL INSTRUCTIONS

Under WAC 173-360A-0300, 173-360A-0810 and 173-360A-0820, owners and/or operators are required to notify the Department of Ecology (Ecology) **at least 30 days prior** to beginning underground storage tank (UST) and/or piping installation, decommissioning, or change-in-service projects by mailing this notice to the address below. A separate form must be used for each project type (e.g. install, removal). Once this form is received by Ecology, it is date-stamped and returned to the owner/operator listed on the form. Installation and decommissioning projects cannot begin within the first 30 days after the date stamped on this form unless the wait-period has been waived by a regional Ecology UST inspector. If a project cannot meet the deadlines described below, an additional 30-Day Notice may be required.

Department of Ecology
Underground Storage Tank Section
PO Box 47655
Olympia, WA 98504-7655

SITE AND OWNER/OPERATOR INFORMATION

Fill in the site/owner information completely. The contact person listed on this form must confirm the exact date an installation or decommissioning project will begin by contacting the regional UST inspector **at least 3 business days** before proceeding.

INSTALLATION/REPLACEMENT OF TANK AND/OR PIPING

Installation projects must begin within 90 days of the date stamped on this notice. Complete the Tank Information section by assigning Tank ID numbers that have not previously been used at the facility. Once processed, this form allows a one-time drop of product for UST system testing purposes only. The fuel drop is not required to occur within the 90-day period. Once your tank(s) store more than one inch of product, leak detection equipment and monitoring must be in place.

To receive additional deliveries and operate the new tanks/piping, you must submit the Business License application, UST Addendum, and the tank/piping Manufacturer's Installation Checklists to the Department of Revenue (DOR) **within 30 days** of completing the installation. This activates the mailing of your Business License with tank endorsement(s) from DOR and the facility compliance tag from Ecology.

If only piping is being installed or replaced piping, the ICC-certified installer must certify the installation by completing the Retrofit/Repair Checklist with the Manufacturer's Installation Checklist and submitting it to the owner/operator. The form packet must be submitted by the owner/operator to Ecology **within 30 days** of completing the piping installation.

PERMANENT CLOSURE OF TANK AND/OR PIPING

Decommissioning projects must be completed within 90 days after the date stamped on this returned notice. Complete the Tank Information section using Tank ID numbers listed on the Business License. Use the Comments box to include additional information, such as the date when product was removed from both the piping and the tank to less than one inch.

Contact your local fire marshal and planning department prior to tank closure to procure any permits required by county or other local jurisdictions. Compliance with the State Environmental Policy Act (SEPA) Rules, Chapter 197-11 WAC may also apply.

A site assessment is required at the time of closure. If contamination is not discovered, a site assessment report must be submitted to the above address **within 30 days**. If contamination is discovered or confirmed, it must be reported to the appropriate Ecology regional office **within 24 hours** and a site characterization report must be submitted to the above address **within 90 days**.

The following are some examples of tanks that are exempt from the UST regulations.

- Farm or residential tanks, 1,100 gallons or less, used to store motor fuel for personal or farm use only. The fuel must be used for farm purposes and cannot be for resale.
- Tanks used for storing heating oil that is used solely for the purpose of heating the premises.
- Tanks with a capacity of 110 gallons or less.
- Emergency overflow tanks, catch basins, or sumps.

If you need this document in a format for the visually impaired, call Toxics Cleanup Program at (360) 407-7170. Persons with hearing loss can call 711 for Washington Relay Service. Persons with speech disability, call (877) 833-6341.

ECY 020-95 (Revised May 2019)

Provided to Builders Exchange of WA, Inc. For usage Conditions Agreement see www.bxwa.com - Always Verify Scal

DEPARTMENT OF ECOLOGY
State of Washington

UST ID #: 620601
County: Snohomish

SITE CHECK/SITE ASSESSMENT CHECKLIST
FOR UNDERGROUND STORAGE TANKS

This checklist certifies that site check or site assessment activities were performed in accordance with Chapter 173-360A WAC. Instructions are found on the last page.

I. UST FACILITY	II. OWNER/OPERATOR INFORMATION
Facility Compliance Tag #: CSID: 15464	Owner/Operator Name: City of Stanwood
UST ID #: 620601	Business Name:
Site Name: Sebranke Property	Address: 10220 270th Street NW
Site Address: 8627 271st Street NW	City: Stanwood State: WA Zip: 98292
City: Stanwood	Phone: 360-454-5206
Phone:	Email: patricia.love@ci.stanwood.wa.us

III. CERTIFIED SITE ASSESSOR	
Service Provider Name: Christian Sifford	Company Name: Maul Foster & Alongi, Inc.
Cell Phone: 541-391-3652 Email: csifford@maulfoster.com	Address: 114 W Magnolia Street, Suite 500
Certification #: 10185106 Exp. Date: 3/12/2027	City: Bellingham State: WA Zip: 98225

IV. TANK INFORMATION

TANK ID	TANK CAPACITY	LAST SUBSTANCE STORED	DATE SITE CHECK OR ASSESSMENT CONDUCTED
2	750 gallons	Unknown	8/18/2025

V. REASON FOR CONDUCTING SITE CHECK/SITE ASSESSMENT (check one)

- ☒ Release investigation following permanent UST system closure (i.e. tank removal or closure-in-place).
- ☐ Release investigation following a failed tank and/or line tightness test.
- ☐ Release investigation following discovery of contaminated soil and/or groundwater.
- ☐ Release investigation directed by Ecology to determine if the UST system is the source of offsite impacts.
- ☐ UST system is undergoing a "change-in-service", which is changing from storing a regulated substance (e.g. gasoline) to storing a non-regulated substance (e.g. water).
- ☐ Directed by Ecology for UST system permanently closed or abandoned before 12/22/1988.
- ☐ Other (describe):

Provided to Builders Exchange of WA, Inc. For usage Conditions Agreement see www.bxwa.com - Always Verify Scal

VI. Checklist

The site assessor must check each of the following items and include it in the report. Sections referenced below can be found in the Ecology publication *Guidance for Site Checks and Site Assessments for Underground Storage Tanks*.	YES	NO
1. The location of the UST site is shown on a vicinity map.	☒	☐
2. A brief summary of information obtained during the site inspection is provided (Section 3.2)	☒	☐
3. A summary of UST system data is provided (Section 3.1)	☒	☐
4. The soils characteristics at the UST site are described. (Section 5.2)	☒	☐
5. Is there any apparent groundwater in the tank excavation?	☐	☒
6. A brief description of the surrounding land use is provided. (Section 3.1)	☒	☐
7. The name and address of the laboratory used to perform analyses is provided. The methods used to collect and analyze the samples, including the number and types of samples collected, are also documented in the report. The data from the laboratory is appended to the report.	☒	☐
8. The following items are provided in one or more sketches:		
• Location and ID number for all field samples collected	☒	☐
• If applicable, groundwater samples are distinguished from soil samples	☒	☐
• Location of samples collected from stockpiled excavated soil	☐	☒
• Tank and piping locations and limits of excavation pit	☒	☐
• Adjacent structures and streets	☒	☐
• Approximate locations of any on-site and nearby utilities	☒	☐
9. If sampling procedures are different from those specified in the guidance, has justification for using these alternative sampling procedures been provided? (Section 3.4)	☒	☐
10. A table is provided showing laboratory results for each sample collected including; sample ID number, constituents analyzed for and corresponding concentration, analytical method, and detection limit for that method. Any sample exceeding MTCA Method A cleanup standards are highlighted or bolded.	☒	☐
11. Any factors that may have compromised the quality of the data or validity of the results are described.	☒	☐
12. The results of this site check/site assessment indicate that a confirmed release of a regulated substance has occurred. The requirements for reporting confirmed releases can be found in WAC 173-360-372.	☐	☒

VII. Required Signatures

Signature acknowledges the Site Check or Site Assessment complies with UST regulations WAC 173-360A-0730 through 0750.

Christian Sifford		9/12/2025
Print or Type Name	Signature of Certified Site Assessor	Date

Provided to Builders Exchange of WA, Inc. For usage Conditions Agreement see www.bxwa.com - Always Verify Scal

SITE CHECK/SITE ASSESSMENT CHECKLIST
FOR UNDERGROUND STORAGE TANKS

INSTRUCTIONS

This checklist must accompany the results of a Site Check Report, which is performed if a release of petroleum or other regulated substance is suspected. It is also required to accompany a Site Assessment Report, which is required following the permanent closure or "change-in-service" of an underground storage tank system. This form is required to be filled out whether or not contamination is found. This checklist is to be completed by the Site Assessor and submitted **within thirty days of completing** these activities to the following address:

Dept. of Ecology
UST Section
PO Box 47655
Olympia, WA 98504-7655

I./II. UST Facility and Owner/Operator Information: Fill out these sections completely. If you do not know your UST ID number, include the facility compliance tag number.

III. Service Provider Information: It is the responsibility of the ICC-certified Site Assessor to ensure that sampling and documentation procedures are completed in accordance with Ecology's *Guidance for Site Checks and Site Assessment for Underground Storage Tanks*.

IV. Tank Information: Use the same Tank identification numbers listed on the facility's Business License which is based on the most recent UST Addendum on file with Ecology. List the last substance stored in each tank, the tank sizes and the date the site check or site assessment was completed.

V. Required Signature: The Site Assessor signature certifies these procedures were followed.

All confirmed releases must be reported to Ecology by the owner within 24 hours and by service providers within 72 hours of discovery. A Site Characterization Report must be submitted to Ecology within 90 days after confirming a release.

Further questions? *Please contact your regional office below and ask for a tank inspector to assist you.*

Regional Office	Counties Served
Central (509) 575-2490	Benton, Chelan, Douglas, Kittitas, Klickitat, Okanogan, Yakima
Eastern (509) 329-3400	Adams, Asotin, Columbia, Ferry, Franklin, Garfield, Grant, Lincoln, Pend Oreille, Spokane, Stevens, Walla Walla, Whitman
HQ (360) 407-7170	Federal facilities in Western Washington
Northwest (425) 649-7000	Island, King, Kitsap, San Juan, Skagit, Snohomish, Whatcom
Southwest (360) 407-6300	Clallam, Clark, Cowlitz, Grays Harbor, Jefferson, Lewis, Mason, Pacific, Pierce, Skamania, Thurston, Wahkiakum

or find a complete list of UST inspectors at:
www.ecy.wa.gov/programs/tcp/ust-lust/people.html

Provided to Builders Exchange of WA, Inc. For usage Conditions Agreement see www.bxwa.com - Always Verify Scal

STRAIGHT BILL OF LADING

ORIGINAL — NOT NEGOTIABLE

Shipper No. 22516

Carrier No.

Page 1 of 4

Marine Vacuum Service Inc.
(Name of carrier) (SCAC)

Date 8/14/25

On Collect on Delivery shipments, the letters "COD" must appear before consignee's name or as otherwise provided in Item 430, Sec.1.

TO:
Consignee Marine Vacuum Service Inc.
Street 1516 South Graham Street
City Seattle State WA Zip Code 98108

FROM:
Shipper WYSER Construction
Street 8627 271st NW
City STANWOOD State WA Zip Code
24 hr. Emergency Contact Tel. No. ChemTel 1-800-255-3924 Contract MIS3627926

Route

Vehicle Number

No. of Units & Container Type	HM	BASIC DESCRIPTION UN or NA Number, Proper Shipping Name, Hazard Class, Packing Group	TOTAL QUANTITY (Weight, Volume, Gallons, etc.)	WEIGHT (Subject to Correction)	RATE	CHARGES (For Carrier Use Only)
1 TT	X	(DOT Spec Tank Required) UN1863 Fuel Aviation, Turbin Engine, Class 3, PG I				
1 TT	X	(DOT Spec Tank Required) UN1863 Fuel Aviation, Mixture, Class 3, PG I				
1 TT	X	(DOT Spec Tank Required) UN1203 Gasoline, Mixture Class 3, PG II				
1 TT	X	(DOT Spec Tank Required) UN1203 Gasoline, Class 3, PG II				
1 TT	X	NA1993 Diesel Mixture, Class 3, PG III				
1 TT	X	NA1993 Diesel, Class 3, PG III				
1 TT	X	NA1270 Petroleum Oil, Class 3, PG I				
1 TT	X	NA1270 Petroleum Oil, Mixture, Class 3, PG I				
1 TT		Oily Waste Water Non Reg by DOT	800 GALS			
1 TT		Waste Water Non Reg by DOT				
1 TT		Used Oil Non Reg by DOT				
1 TT		Used Coolant Non Reg by DOT				

PLACARDS TENDERED: YES ☐ NO ☒

Note — (1) Where the rate is dependent on value, shippers are required to state specifically in writing the agreed or declared value of the property, as follows: "The agreed or declared value of the property is hereby specifically stated by the shipper to be not exceeding _____ per _____."
(2) Where the applicable tariff provisions specify a limitation of the carrier's liability absent a release or a value declaration by the shipper and the shipper does not release the carrier's liability or declare a value, the carrier's liability shall be limited to the extent provided by such provisions. See NMFC Item 172.
(3) Commodities requiring special or additional care or attention in handling or stowing must be so marked and packaged as to ensure safe transportation. See Section 2(e) of item 360, Bills of Lading, Freight Bills and Statements of Charges and Section 1(a) of the Contract Terms and Conditions for a list of such articles.

I hereby declare that the contents of this consignment are fully and accurately described above by the proper shipping name and are classified, packaged, marked and labelled/placarded, and are in all respects in proper condition for transport according to applicable international and national governmental regulations.

_____ Signature

REMIT C.O.D. TO: ADDRESS

COD Amt: $

C.O.D. FEE: PREPAID ☐ COLLECT ☐ $

Subject to Section 7 of the conditions, if this shipment is to be delivered to the consignee without recourse on the consignor, the consignor shall sign the following statement:
The carrier shall not make delivery of this shipment without payment of freight and all other lawful charges.

_____ (Signature of Consignor)

TOTAL CHARGES $

FREIGHT CHARGES
FREIGHT PREPAID except when box at right is checked ☐ Check box if charges are to be collect

RECEIVED, subject to the classifications and tariffs in effect on the date of the issue of this Bill of Lading, the property described above in apparent good order, except as noted (contents and condition of contents of packages unknown), marked, consigned, and destined as indicated above which said carrier (the word carrier being understood throughout this contract as meaning any person or corporation in possession of the property under the contract) agrees to carry to its usual place of delivery at said destination, if on its route, otherwise to deliver to another carrier on the route to said destination. It is mutually agreed as to each carrier of all or any of, said property over all or any portion of said route to destination and as to each party at any time interested in all or any said property, that every service to be performed hereunder shall be subject to all the bill of lading terms and conditions in the governing classification on the date of shipment.

Shipper hereby certifies that he is familiar with all the lading terms and conditions in the governing classification and the said terms and conditions are hereby agreed to by the shipper and accepted for himself and his assigns.

SHIPPER City Stanwood / WYSER Cons
PER [signature] 9:55

CARRIER MAR VAC
PER [signature]
DATE 08/14/25

Permanent post-office address of shipper.

Provided to Builders Exchange of WA, Inc. For usage Conditions Agreement see www.bxwa.com - Always Verify Scal

Marine Vacuum Service, Inc.

GENERAL CONTRACTOR

CONTRACTORS LICENSE # MARINVS097JA

P0. Box 24263 Seattle, Washington 98124

Telephone (206) 762-0240

FAX (206) 763-8084

MFA-25-1721

AST/UST STORAGE TANK PUMP & RINSE CERTIFICATE

Tank Size: 750 GALLONS TANK

Last Contents Heating oil

Tank Location: 8027 271st NW

Stanwood

Marine Vacuum Service, Inc. certifies that the above mentioned tank(s) have been triple rinsed in accordance with the industry standard as outlined in 40 CFR PART 280.70, WAC 173-360-380(I), API 1604, API 2015 and that all residual product and rinsate has been disposed of in accordance with Federal, State and Local regulations. Tanks listed above are **NOT GAS FREE** or **NOT SAFE FOR HOT WORK**

Tank Owner: City of Stanwood

Contractor: WATER construction

M.V.S. Representative: Joe Simon

Date: 08/14/26

Notes:

Provided to Builders Exchange of WA, Inc. For usage Conditions Agreement see www.bxwa.com - Always Verify Scal

WYSER VISA
MFA-25-1721

Stanwood Redi-Mix, Inc.
PO Box 69
Ivana, WA 98287
+13606527777
kimmie@stanwoodredi-mix.com
www.stanwoodredi-mix.com

Invoice

BILL TO
CASH

SHIP TO
8627 271ST ST
STANWOOD, WA 98292

INVOICE #	DATE	TOTAL DUE	DUE DATE	TERMS	ENCLOSED
83547	08/14/2025	$0.00	08/14/2025	Due on receipt	

YOUR PURCHASE ORDER	YOUR PROJECT	TICKET NUMBER
DAN REYNOLDS	FILL	241261

ACTIVITY	QTY	RATE	AMOUNT
3000 Control Density Fill	4	152.00	608.00
3000 Environmental Compliance Charge	4	5.00	20.00
3020 Fuel Surcharge Fee (per load)	1	40.00	40.00
3000 Short Load Fee 4cy	1	85.00	85.00

PAID

SUBTOTAL	753.00
TAX	0.00
TOTAL	753.00
PAYMENT	753.00
BALANCE DUE	**$0.00**

Provided to Builders Exchange of WA, Inc. For usage Conditions Agreement see www.bxwa.com - Always Verify Scal

DEPARTMENT OF ECOLOGY
State of Washington

PERMANENT CLOSURE NOTICE
FOR UNDERGROUND STORAGE TANKS

This notice certifies that permanent closure activities were performed and conducted in accordance with Chapter 173-360A WAC. Instructions are found on the back page.

UST ID #: 620601
County: Snohomish

I. UST FACILITY		II. OWNER/OPERATOR INFORMATION	
Facility Compliance Tag #: CSID: 15464		Owner/Operator Name: City of Stanwood	
UST ID #: 620601		Business Name:	
Site Name: Sebranke Property		Address: 10220 270th Street NW	
Site Address: 8627 271st Street NW		City: Stanwood	State: WA Zip: 98292
City: Stanwood		Phone: 360-454-5206	
Phone:		Email: Patricia.Love@ci.stanwood.wa.us	

III. CERTIFIED UST DECOMMISSIONER			
Company Name: Wyser Construction		Service Provider Name: Mike Redford	
Address: 19015 109th Ave SE		Certification Type: ICC UST Decommissioner	
City: Snohomish	State: WA Zip: 98296	Cert. No.: 873136	Exp. Date: 4/5/2027
Provider Phone: 206-200-8666		Provider Email: dan@wyserdirt.com	
Provider Signature: Mike Redford		***Date:*** 8-26-2025	

IV. TANK INFORMATION

TANK ID	TANK CAPACITY	LAST SUBSTANCE STORED	CLOSURE METHOD			CLOSURE DATE
			removal	closed-in-place	change-in-service	
2	750 gallons	Unknown	☐	☒	☐	8/14/2025
			☐	☐	☐	
			☐	☐	☐	
			☐	☐	☐	
			☐	☐	☐	
			☐	☐	☐	

V. REQUIRED SIGNATURE

Signature acknowledges UST(s) comply with UST regulation WAC 173-360A-0810 Permanent Closure Requirements.

9.09.25	Patricia Love	Patricia Love
Date	Signature of Tank Owner/Operator or Authorized Representative	Print or Type Name

ECY 020-94 (Revised October 2018)

Provided to Builders Exchange of WA, Inc. For usage Conditions Agreement see www.bxwa.com - Always Verify Scal

PERMANENT CLOSURE NOTICE
FOR UNDERGROUND STORAGE TANKS

INSTRUCTIONS

This form must be completed and submitted **within thirty days of completing** permanent closure activities to the following address:

Dept. of Ecology
UST Section
PO Box 47655
Olympia, WA 98504-7655

I./II. UST Facility and Owner/Operator: Fill out these sections completely. If you do not know your UST ID number, include the facility compliance tag number. If all tanks at the site are permanently closed, the facility compliance tag must be returned with this notice.

III. UST Decommissioner: It is the responsibility of the ICC-certified Decommissioner to follow proper tank closure procedures in accordance with WAC 173-360A-0810. The Decommissioner signature certifies these procedures were followed.

IV. Tank Information: Use the same Tank IDs that are listed on the facility's Business License. List the last substance stored in each tank, the tank sizes, the method by which the tank is being closed, and the date closure activities were conducted. All closure methods require a site assessment be conducted in accordance with Ecology's *Guidance for Site Checks and Site Assessments for Underground Storage Tanks.*

V. Required Signature: The owner and/or operator's signature is required. Also, the owner and/or operator is responsible for reporting confirmed releases to Ecology within 24 hours.

All confirmed releases must be reported to Ecology by the owner immediately and by service providers within 72 hours of the discovery of the condition. If the owner or operator is not immediately available, the report should be made directly to Ecology.

Be sure to contact your local fire marshal and other local jurisdictions. They may have other codes and regulations that apply to a permanent tank closure.

Further questions? *Please contact your regional office below and ask for a tank inspector to assist you.*

Regional Office	Counties Served
Central (509) 575-2490	Benton, Chelan, Douglas, Kittitas, Klickitat, Okanogan, Yakima
Eastern (509) 329-3400	Adams, Asotin, Columbia, Ferry, Franklin, Garfield, Grant, Lincoln, Pend Oreille, Spokane, Stevens, Walla Walla, Whitman
HQ (360) 407-7170	Federal facilities in Western Washington
Northwest (425) 649-7000	Island, King, Kitsap, San Juan, Skagit, Snohomish, Whatcom
Southwest (360) 407-6300	Clallam, Clark, Cowlitz, Grays Harbor, Jefferson, Lewis, Mason, Pacific, Pierce, Skamania, Thurston, Wahkiakum

or find a complete list of UST inspectors at:
www.ecy.wa.gov/programs/tcp/ust-lust/people.html

Provided to Builders Exchange of WA, Inc. For usage Conditions Agreement see www.bxwa.com - Always Verify Scal

BXWA

Attachment C

Analytical Laboratory Report

MAUL FOSTER ALONGI

Provided to Builders Exchange of WA, Inc. For usage Conditions Agreement see www.bxwa.com - Always Verify Scal

FRIEDMAN & BRUYA, INC.

ENVIRONMENTAL CHEMISTS

Elizabeth Webber-Bruya
Ann Webber-Bruya
Michael Erdahl
Vineta Mills
Eric Young

5500 4th Ave South
Seattle, WA 98108-2419
(206) 285-8282
office@friedmanandbruya.com
www.friedmanandbruya.com

September 9, 2025

Carolyn Wise, Project Manager
Maul Foster Alongi
114 W Magnolia St, Suite 500
Bellingham, WA 98225

Dear Ms Wise:

Included are the amended results from the testing of material submitted on August 19, 2025 from the Sebranke UST Site Assessment M1030.02.006, F&BI 508318 project. The sample IDs were updated.

Sincerely,

FRIEDMAN & BRUYA, INC.



Michael Erdahl
Project Manager

Enclosures
MFA0822R.DOC

Provided to Builders Exchange of WA, Inc. For usage Conditions Agreement see www.bxwa.com - Always Verify Scal

FRIEDMAN & BRUYA, INC.

ENVIRONMENTAL CHEMISTS

Elizabeth Webber-Bruya
Ann Webber-Bruya
Michael Erdahl
Vineta Mills
Eric Young

5500 4th Ave South
Seattle, WA 98108-2419
(206) 285-8282
office@friedmanandbruya.com
www.friedmanandbruya.com

August 22, 2025

Carolyn Wise, Project Manager
Maul Foster Alongi
114 W Magnolia St, Suite 500
Bellingham, WA 98225

Dear Ms Wise:

Included are the results from the testing of material submitted on August 19, 2025 from the Sebranke UST Site Assessment M1030.02.006, F&BI 508318 project. There are 3 pages included in this report. Any samples that may remain are currently scheduled for disposal in 30 days, or as directed by the Chain of Custody document. If you would like us to return your samples or arrange for long term storage at our offices, please contact us as soon as possible.

We appreciate this opportunity to be of service to you and hope you will call if you should have any questions.

Sincerely,

FRIEDMAN & BRUYA, INC.



Michael Erdahl
Project Manager

Enclosures
MFA0822R.DOC

Provided to Builders Exchange of WA, Inc. For usage Conditions Agreement see www.bxwa.com - Always Verify Scal

BXWA

FRIEDMAN & BRUYA, INC.

ENVIRONMENTAL CHEMISTS

CASE NARRATIVE

This case narrative encompasses samples received on August 19, 2025 by Friedman & Bruya, Inc. from the Maul Foster Alongi Sebranke UST Site Assessment M1030.02.006, F&BI 508318 project. Samples were logged in under the laboratory ID's listed below.

Laboratory ID	Maul Foster Alongi
508318 -01	Trip Blank 01
508318 -02	GP12-S-7.0
508318 -03	GP11-S-6.0
508318 -04	GP13-S-7.5

All quality control requirements were acceptable.

Provided to Builders Exchange of WA, Inc. For usage Conditions Agreement see www.bxwa.com - Always Verify Scal

Date of Report: 08/22/25
Date Received: 08/19/25
Project: Sebranke UST Site Assessment M1030.02.006, F&BI 508318
Date Extracted: 08/20/25
Date Analyzed: 08/20/25

RESULTS FROM THE ANALYSIS OF SOIL SAMPLES FOR GASOLINE, DIESEL AND HEAVY OIL BY NWTPH-HCID

Results Reported on a Dry Weight Basis
Results Reported as Not Detected (ND) or Detected (D)

THE DATA PROVIDED BELOW WAS PERFORMED PER THE GUIDELINES ESTABLISHED BY THE WASHINGTON DEPARTMENT OF ECOLOGY AND WERE NOT DESIGNED TO PROVIDE INFORMATION WITH REGARDS TO THE ACTUAL IDENTIFICATION OF ANY MATERIAL PRESENT

Sample ID Laboratory ID	Gasoline	Diesel	Heavy Oil	Surrogate (% Recovery) (Limit 50-150)
GP12-S-7.0 508318-02	ND	ND	ND	104
GP11-S-6.0 508318-03	ND	ND	ND	106
GP13-S-7.5 508318-04	ND	ND	ND	105
Method Blank 05-2082 MB	ND	ND	ND	124

ND - Material not detected at or above 20 mg/kg gas, 50 mg/kg diesel and 200 mg/kg heavy oil.

Provided to Builders Exchange of WA, Inc. For usage Conditions Agreement see www.bxwa.com - Always Verify Scal

Data Qualifiers & Definitions

a - The analyte was detected at a level less than five times the reporting limit. The RPD results may not provide reliable information on the variability of the analysis.

b - The analyte was spiked at a level that was less than five times that present in the sample. Matrix spike recoveries may not be meaningful.

ca - The calibration results for the analyte were outside of acceptance criteria, biased low; or, the calibration results for the analyte were outside of acceptance criteria, biased high, with a detection for the analyte in the sample. The value reported is an estimate.

c - The presence of the analyte may be due to carryover from previous sample injections.

cf - The sample was centrifuged prior to analysis.

d - The sample was diluted. Detection limits were raised and surrogate recoveries may not be meaningful.

dv - Insufficient sample volume was available to achieve normal reporting limits.

f - The sample was laboratory filtered prior to analysis.

fb - The analyte was detected in the method blank.

fc - The analyte is a common laboratory and field contaminant.

hr - The sample and duplicate were reextracted and reanalyzed. RPD results were still outside of control limits. Variability is attributed to sample inhomogeneity.

hs - Headspace was present in the container used for analysis.

ht – The analysis was performed outside the method or client-specified holding time requirement.

ip - Recovery fell outside of control limits due to sample matrix effects.

j - The analyte concentration is reported between the method detection limit and the lowest calibration point. The value reported is an estimate.

J - The internal standard associated with the analyte is out of control limits. The reported concentration is an estimate.

jl - The laboratory control sample(s) percent recovery and/or RPD were out of control limits. The reported concentration should be considered an estimate.

js - The surrogate associated with the analyte is out of control limits. The reported concentration should be considered an estimate.

k – The calibration results for the analyte were outside of acceptance criteria, biased high, and the analyte was not detected in the sample.

lc - The presence of the analyte is likely due to laboratory contamination.

L - The reported concentration was generated from a library search.

nm - The analyte was not detected in one or more of the duplicate analyses. Therefore, calculation of the RPD is not applicable.

pc - The sample was received with incorrect preservation or in a container not approved by the method. The value reported should be considered an estimate.

ve - The analyte response exceeded the valid instrument calibration range. The value reported is an estimate.

vo - The value reported fell outside the control limits established for this analyte.

x - The sample chromatographic pattern does not resemble the fuel standard used for quantitation.

Provided to Builders Exchange of WA, Inc. For usage Conditions Agreement see www.bxwa.com - Always Verify Scal

508318

SAMPLE CHAIN OF CUSTODY 08/19/25 VWI/NI/EI

Page # 1 of 1

Report To Carolyn Wise
Company Maul Foster & Alongi
Address 1141 W Magnolia St, Ste 500
City, State, ZIP Bellingham, WA, 98225
Phone 360-640-5982 Email cwise@maulfoster.com

SAMPLERS (signature)

PROJECT NAME: Sebraulce UST site assessment
PO #: M1030.02.006

REMARKS
Project specific RLs? - Yes / No

INVOICE TO: accounting@maulfoster.com

TURNAROUND TIME
☒ Standard turnaround
☐ RUSH
Rush charges authorized by:

SAMPLE DISPOSAL
☐ Archive samples
☐ Other
Default: Dispose after 30 days

Sample ID	Lab ID	Date Sampled	Time Sampled	Sample Type	# of Jars	NWTPH-Dx	NWTPH-Gx	BTEX EPA 8021	NWTPH-HCID	VOCs EPA 8260	PAHs EPA 8270	PCBs EPA 8082					Notes
Trip Blank 01	01A-B	8/15/25	—	Water	2			Q									Hold BTEX
GP12 (GP09) -S-7.0	02A-E	8/18/25	10:00	Soil	5				✓								
GP11 (GP08) -S-6.0	03	8/18/25	10:40	Soil	5				✓								
GP13 (GP10) -S-7.5	04	8/18/25	11:20	Soil	5				✓								
9/9/25																	
									Samples received at 2 °C								

SIGNATURE	PRINT NAME	COMPANY	DATE	TIME
Relinquished by:	Christian Sifford	MFA	8/15/25	13:30
Received by:	Anh Pham	FBI	8/19/25	15:16
Relinquished by:				
Received by:				

Friedman & Bruya, Inc.
5500 4th Ave S.
Seattle WA 98108
(206) 285-8282
office@friedmanandbruya.com

Provided to Builders Exchange of WA, Inc. For usage Conditions Agreement see www.bxwa.com - Always Verify Scal

SAMPLE CONDITION UPON RECEIPT CHECKLIST

PROJECT # 508318 CLIENT MFA INITIALS/ DATE: AP 8/19/25

If custody seals are present on cooler, are they intact? ☑ NA ☐ YES ☐ NO

Cooler/Sample temperature 2 °C
Thermometer ID: Fluke 96312917

Were samples received on ice/cold packs? ☑ YES ☐ NO

How did samples arrive?
☐ Over the Counter ☐ Picked up by F&BI ☑ FedEx/UPS/GSO

Is there a Chain-of-Custody* (COC)? ☑ YES ☐ NO Initials/ Date: AP 8/19/25
*or other representative documents, letters, and/or shipping memos

Number of days samples have been sitting prior to receipt at laboratory 1 days

Are the samples clearly identified? (explain "no" answer below) ☑ YES ☐ NO

Were all sample containers received intact (i.e. not broken, leaking etc.)? (explain "no" answer below) ☑ YES ☐ NO

Were appropriate sample containers used? ☑ YES ☐ NO ☐ Unknown

If custody seals are present on samples, are they intact? ☑ NA ☐ YES ☐ NO

Are samples requiring no headspace, headspace free? ☐ NA ☑ YES ☐ NO

Is the following information provided on the COC, and does it match the sample label?
(explain "no" answer below)

Sample ID's	☑ Yes ☐ No	☐ Not on COC/label
Date Sampled	☑ Yes ☐ No	☐ Not on COC/label
Time Sampled	☑ Yes ☐ No	☐ Not on COC/label
# of Containers	☑ Yes ☐ No	
Relinquished	☑ Yes ☐ No	
Requested analysis	☑ Yes ☐ On Hold	

Other comments (use a separate page if needed)

Air Samples: Were any additional canisters/tubes received? ☑ NA ☐ YES ☐ NO

Number of unused TO15 canisters** _____ Number of unused TO17 tubes _____
**Fill out Green manifolds billing sheet

Provided to Builders Exchange of WA, Inc. For usage Conditions Agreement see www.bxwa.com - Always Verify Scal

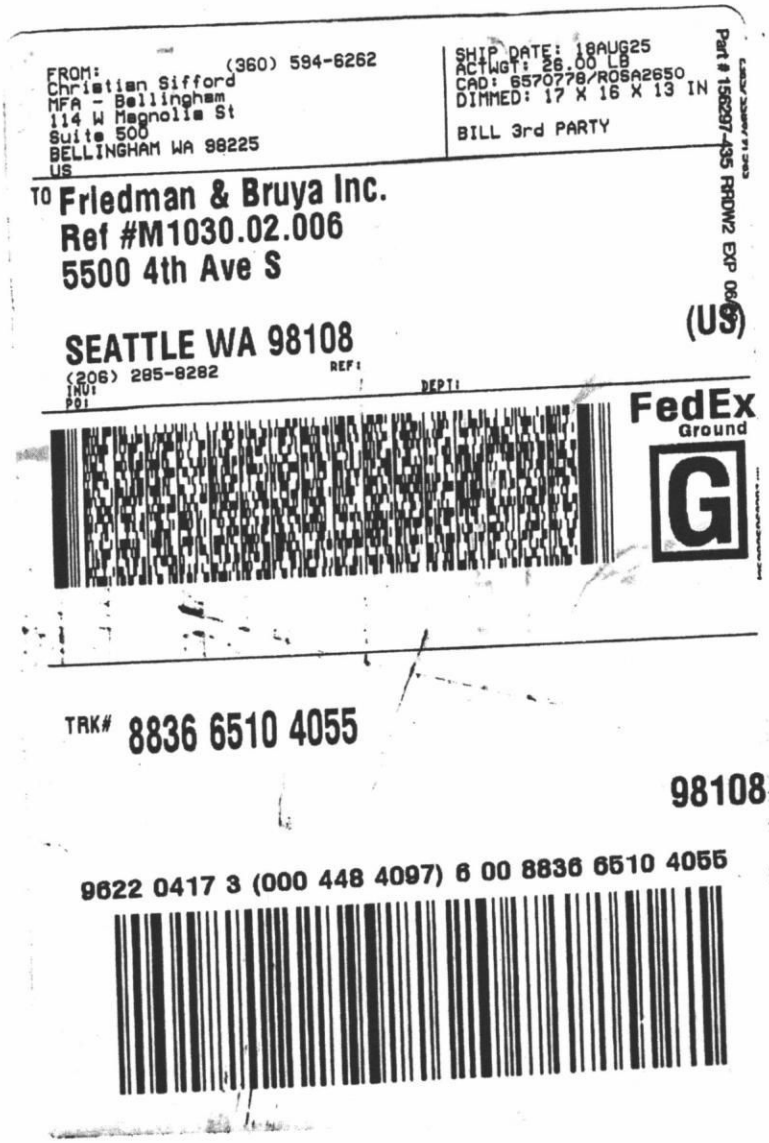

Provided to Builders Exchange of WA, Inc. For usage Conditions Agreement see www.bxwa.com - Always Verify Scal

eyoung@friedmanandbruya.com

From: Fiona Bellows <fbellows@maulfoster.com>
Sent: Monday, September 8, 2025 1:32 PM
To: Eric Young
Cc: Brenden Murphy; Carolyn Wise
Subject: Report 508318 ID Updates

Hi Eric,

We found we submitted incorrect IDs on the COC for report 508318 under the Sebranke UST project. Could you please revise the report with the following ID updates? **Please attach this email to the report for traceability.**

Lab ID	Old Client ID	Corrected Client ID
508318-02	GP09-S-7.0	GP12-S-7.0
508318-03	GP08-S-6.0	GP11-S-6.0
508318-04	GP10-S-7.5	GP13-S-7.5

Could you provide today or tomorrow? Thanks!

FIONA BELLOWS | MAUL FOSTER & ALONGI, INC.
Project Chemist
pronouns: she/her
d: 206 556 2020 m. 425 330 0916

MAUL FOSTER ALONGI

2815 2nd Avenue, Suite 540, Seattle WA 98121
www.maulfoster.com

Provided to Builders Exchange of WA, Inc. For usage Conditions Agreement see www.bxwa.com - Always Verify Scal

APPENDIX G
ILLUMINATION DETAILS

Provided to Builders Exchange of WA, Inc. For usage Conditions Agreement see www.bxwa.com - Always Verify Scal

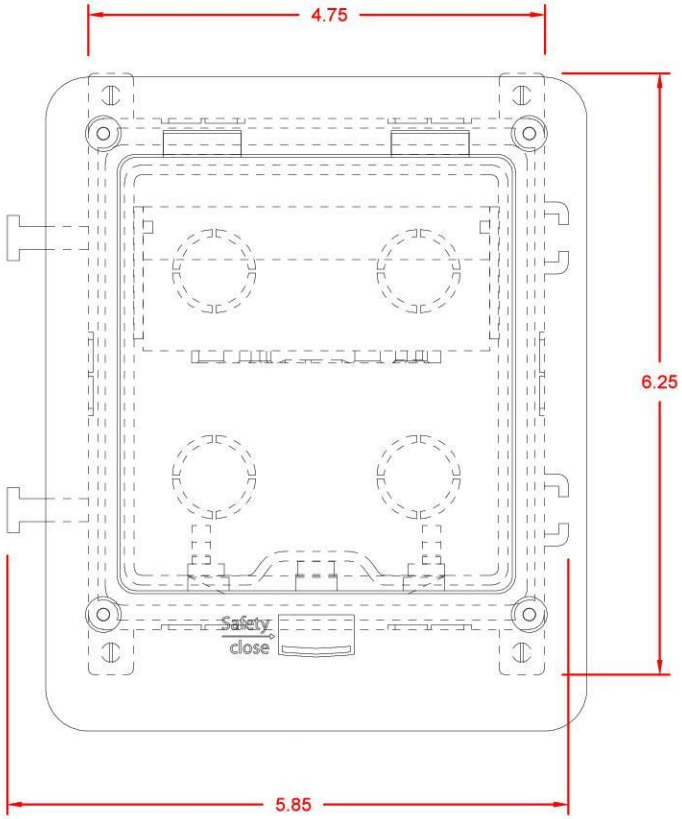

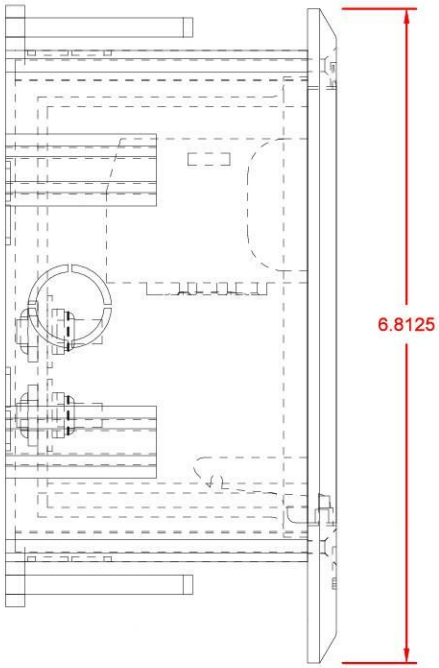

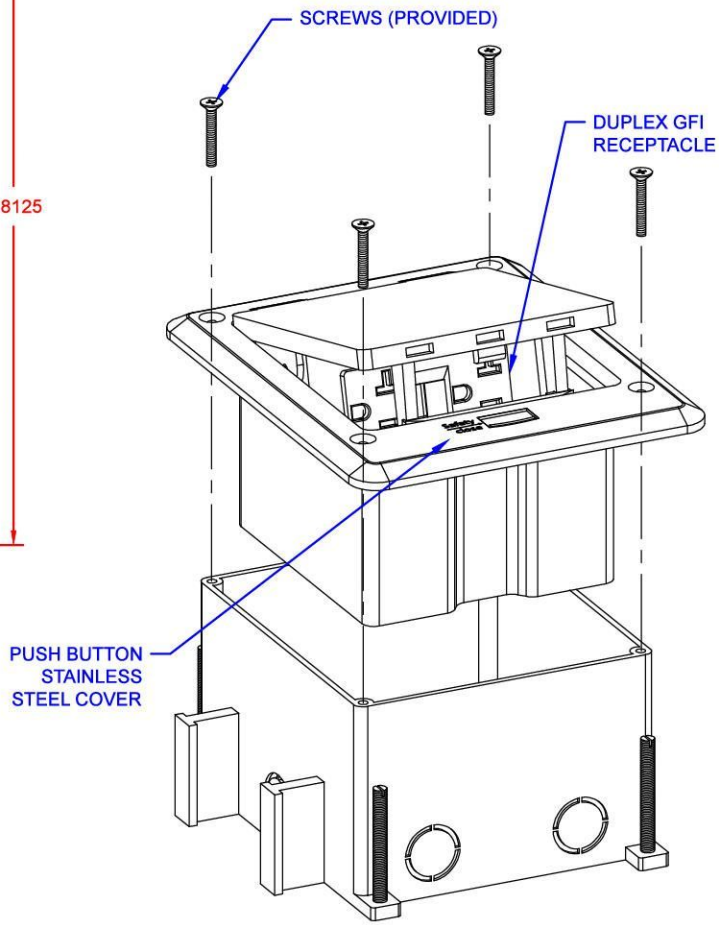

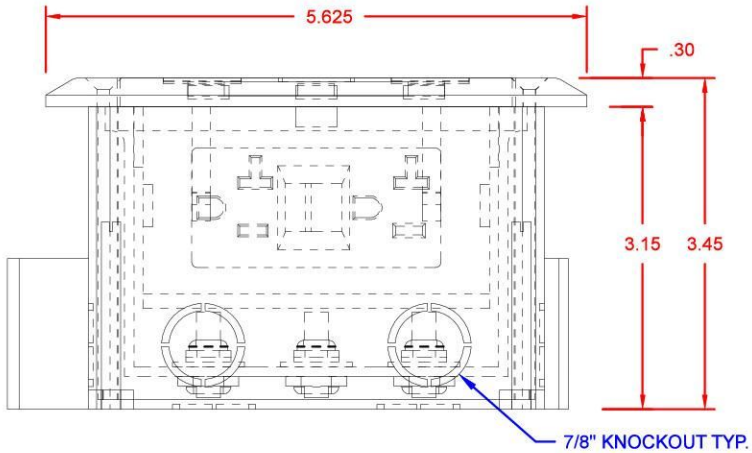

LEW ELECTRIC
FITTINGS COMPANY
SERVING THE ELCTRICAL INDUSTRY SINCE 1901

371 Randy Rd, Carol Stream, IL 60188
PHONE: 630.665.2075

		NAME	DATE
UNLESS OTHERWISE SPECIFIED:			
DIMENSIONS ARE IN INCHES	DRAWN	SMK	08/2/2019
TOLERANCES: FRACTIONAL ± ANGULAR: MACH ± BEND ± TWO PLACE DECIMAL ± THREE PLACE DECIMAL ±			
INTERPRET GEOMETRIC TOLERANCING PER:			
MATERIAL	COMMENTS:		
FINISH			
DO NOT SCALE DRAWING			

TITLE: **QB-1-SP**

SIZE	DWG. NO.	REV
A	000001	A
	WEIGHT:	SHEET 1 OF 1

Provided to Builders Exchange of WA, Inc. For usage Conditions Agreement see www.bxwa.com - Always Verify Scal

APPENDIX H
STANDARD PLANS

Provided to Builders Exchange of WA, Inc. For usage Conditions Agreement see www.bxwa.com - Always Verify Scal

DRAWN BY: FERN LIDDELL

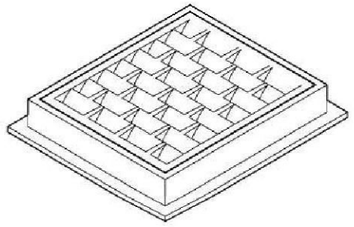

FRAME AND VANED GRATE

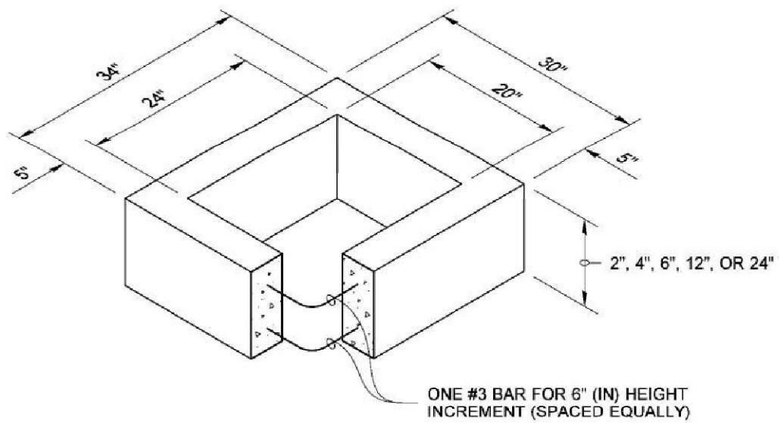

RECTANGULAR ADJUSTMENT SECTION

PIPE ALLOWANCES	
PIPE MATERIAL	**MAXIMUM INSIDE DIAMETER (INCHES)**
REINFORCED OR PLAIN CONCRETE	12"
ALL METAL PIPE	15"
CPSSP * **(STD. SPEC. SECT. 9-05.20)**	12"
SOLID WALL PVC **(STD. SPEC. SECT. 9-05.12(1))**	15"
PROFILE WALL PVC **(STD. SPEC. SECT. 9-05.12(2))**	15"

* CORRUGATED POLYETHYLENE STORM SEWER PIPE

NOTES

1. As acceptable alternatives to the rebar shown in the **PRECAST BASE SECTION**, fibers (placed according to the Standard Specifications), or wire mesh having a minimum area of 0.12 square inches per foot shall be used with the minimum required rebar shown in the **ALTERNATIVE PRECAST BASE SECTION**. Wire mesh shall not be placed in the knockouts.
2. The knockout diameter shall not be greater than 20" (in). Knockouts shall have a wall thickness of 2" (in) minimum to 2.5" (in) maximum. Provide a 1.5" (in) minimum gap between the knockout wall and the outside of the pipe. After the pipe is installed, fill the gap with joint mortar in accordance with **Standard Specification Section 9-04.3**.
3. The maximum depth from the finished grade to the lowest pipe invert shall be 5' (ft).
4. The frame and grate may be installed with the flange down, or integrally cast into the adjustment section with flange up.
5. The Precast Base Section may have a rounded floor, and the walls may be sloped at a rate of 1 : 24 or steeper.
6. The opening shall be measured at the top of the **Precast Base Section**.
7. All pickup holes shall be grouted full after the basin has been placed.

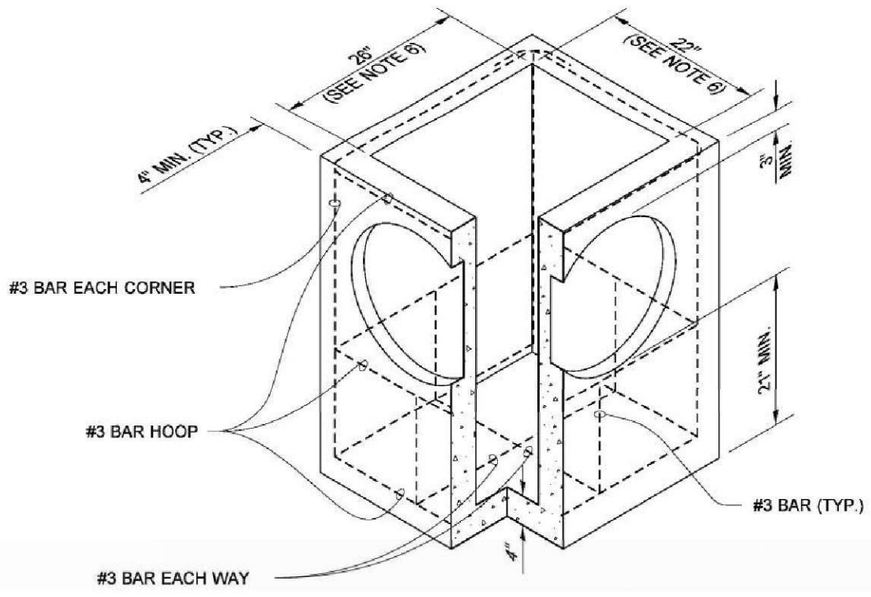

PRECAST BASE SECTION

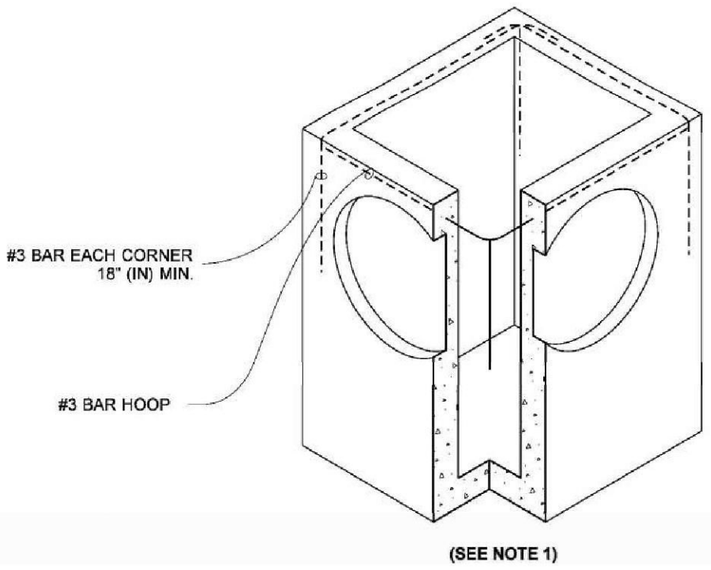

(SEE NOTE 1)

ALTERNATIVE PRECAST BASE SECTION

JULIE HEILMAN
STATE OF WASHINGTON
41819
REGISTERED
PROFESSIONAL ENGINEER

Julie Heilman
Julie Heilman
2020.09.01 07:52:50 -07'00'

CATCH BASIN TYPE 1

STANDARD PLAN B-5.20-03

SHEET 1 OF 1 SHEET

APPROVED FOR PUBLICATION
Roark, Steve
Digitally signed by Roark, Steve
Date: 2020.09.09 09:45:23 -07'00'
STATE DESIGN ENGINEER
Washington State Department of Transportation

Provided to Builders Exchange of WA, Inc. For usage Conditions Agreement see www.bxwa.com - Always Verify Scal

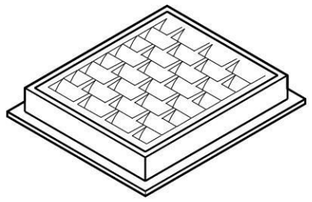

FRAME AND VANED GRATE

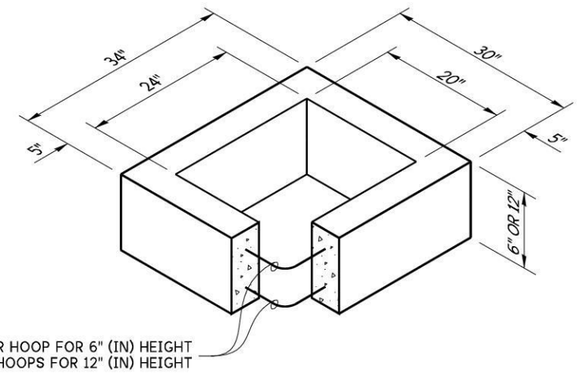

RECTANGULAR ADJUSTMENT SECTION

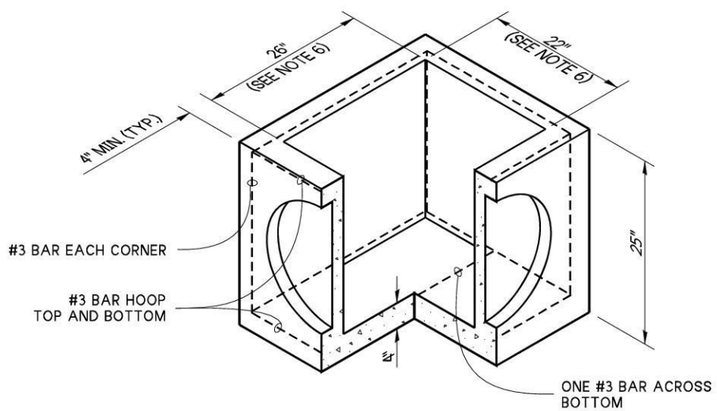

PRECAST BASE SECTION

PIPE ALLOWANCES	
PIPE MATERIAL	MAXIMUM INSIDE DIAMETER (INCHES)
REINFORCED OR PLAIN CONCRETE	12"
ALL METAL PIPE	15"
CPSSP * (STD. SPEC. SECT. 9-05.20)	12"
POLYPROPYLENE (STD. SPEC. SECT. 9-05.24)	12"
SOLID WALL PVC (STD. SPEC. SECT. 9-05.12(1))	15"
PROFILE WALL PVC (STD. SPEC. SECT. 9-05.12(2))	15"

* CORRUGATED POLYETHYLENE STORM SEWER PIPE

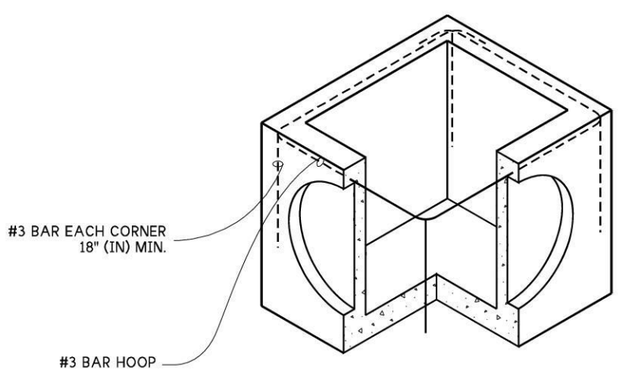

ALTERNATIVE PRECAST BASE SECTION

(SEE NOTE 1)

NOTES

1. As acceptable alternatives to the rebar shown in the PRECAST BASE SECTION, fibers (placed according to the Standard Specifications), or wire mesh having a minimum area of 0.12 square inches per foot shall be used with the minimum required rebar shown in the ALTERNATIVE PRECAST BASE SECTION. Wire mesh shall not be placed in the knockouts.

2. The knockout diameter shall not be greater than 18" (in) . Knockouts shall have a wall thickness of 2" (in) minimum to 2.5" (in) maximum. Provide a 1.5" (in) minimum gap between the knockout wall and the outside of the pipe. After the pipe is installed, Fill the gap with joint mortar in accordance with Standard Specification Section 9-04.3.

3. The maximum depth from the finished grade to the lowest pipe invert shall be 5' (ft).

4. The frame and grate may be installed with the flange up or down. The frame may be cast into the adjustment section.

5. The Precast Base Section may have a rounded floor, and the walls may be sloped at a rate of 1 : 24 or steeper.

6. The opening shall be measured at the top of the precast base section.

7. All pickup holes shall be grouted full after the inlet has been placed.

8. Pipe allowances will vary depending on pipe material used. Contact the Region Hydraulic Engineer for assistance.

JULIE HEILMAN
STATE OF WASHINGTON
41819
REGISTERED
PROFESSIONAL ENGINEER

Aug 23, 2023

CONCRETE INLET

STANDARD PLAN B-25.60-03

SHEET 1 OF 1 SHEET

APPROVED FOR PUBLICATION

Aug 23, 2023

STATE DESIGN ENGINEER

Washington State Department of Transportation

Provided to Builders Exchange of WA, Inc. For usage Conditions Agreement see www.bxwa.com - Always Verify Scal

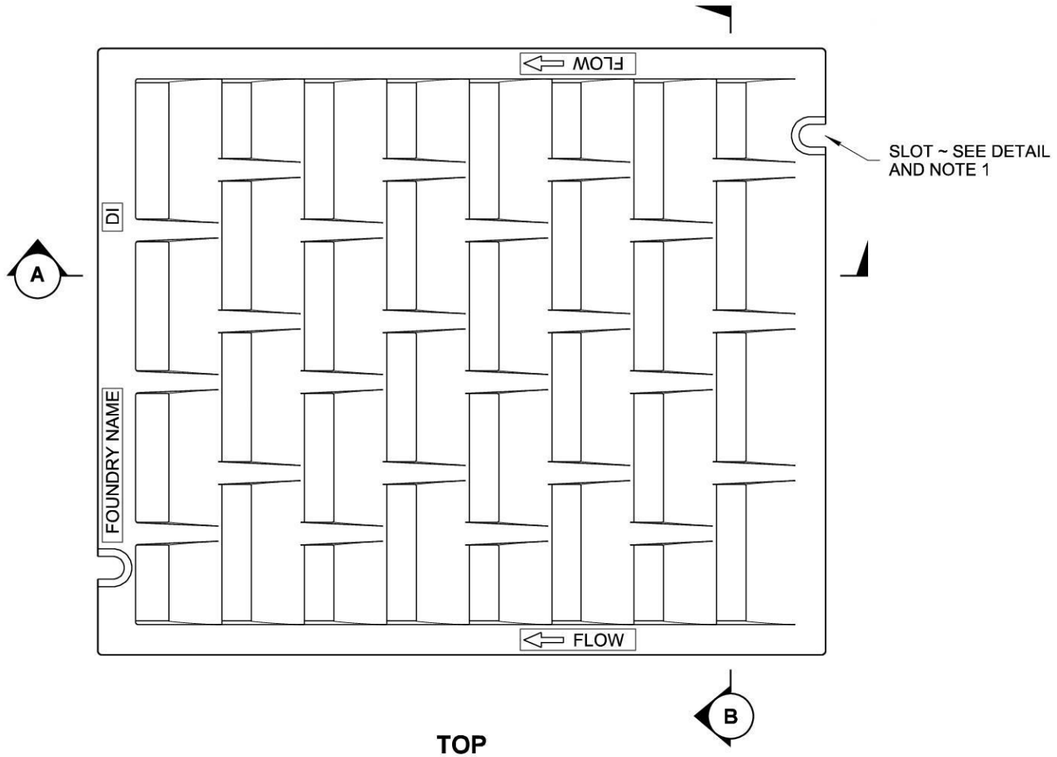

TOP

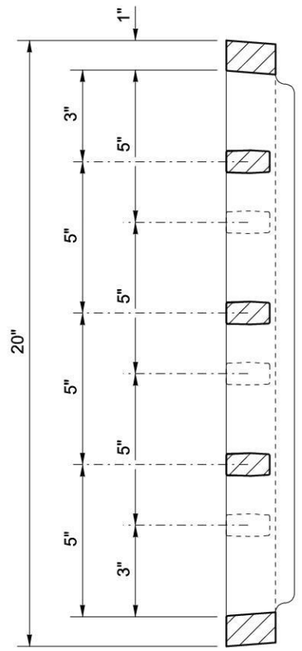

SECTION B

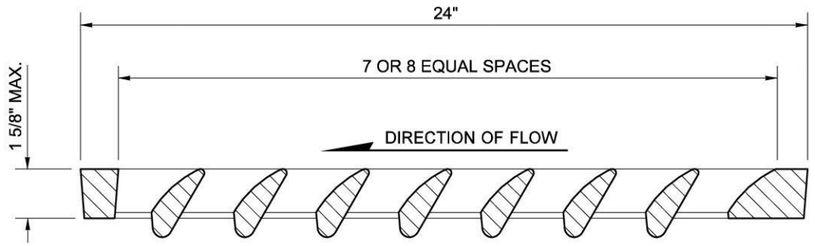

SECTION A

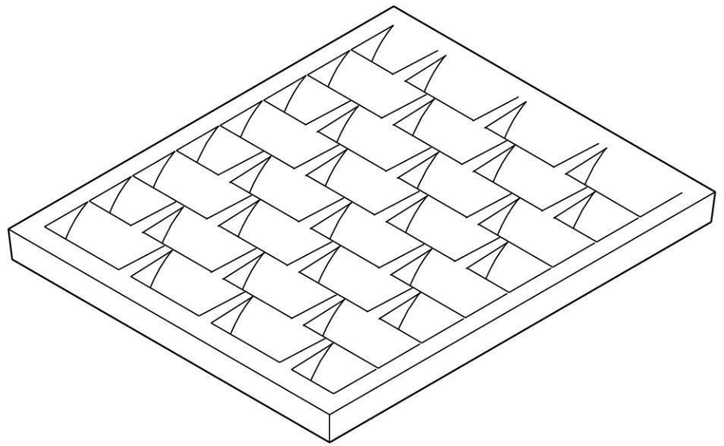

ISOMETRIC

NOTES

1. Bolt-down capability is required on all frames, grates, and covers, unless specified otherwise in the Contract. Provide 2 holes in the frame that are vertically aligned with the grate or cover slots. The frame shall accept the 304 Stainless Steel (S.S.) 5/8" (in) - 11 NC × 2" (in) allen head cap screw by being tapped, or other approved mechanism. Location of bolt-down holes varies by manufacturer.
2. Refer to **Standard Specification Section 9-05.15** and **9-05.15(2)** for additional requirements.
3. For frame details, see **Standard Plan B-30.10**.

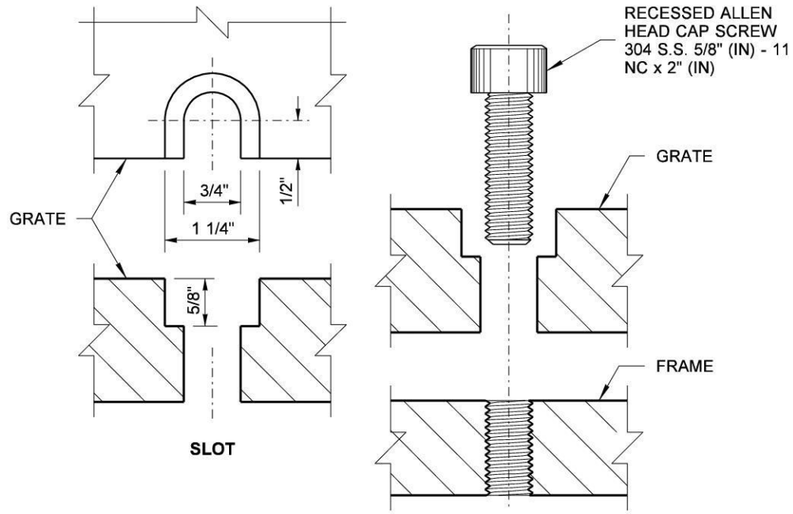

BOLT-DOWN DETAILS
SEE NOTE 1

JULIE HEILMAN
STATE OF WASHINGTON
41819
REGISTERED
PROFESSIONAL ENGINEER

Heilman, Julie
Feb 20 2018 12:54 PM
cosign

RECTANGULAR VANED GRATE

STANDARD PLAN B-30.30-03

SHEET 1 OF 1 SHEET

APPROVED FOR PUBLICATION
Carpenter, Jeff
Feb 27 2018 7:58 AM
cosign
STATE DESIGN ENGINEER
Washington State Department of Transportation

DRAWN BY: FERN LIDDELL

Provided to Builders Exchange of WA, Inc. For usage Conditions Agreement see www.bxwa.com - Always Verify Scal

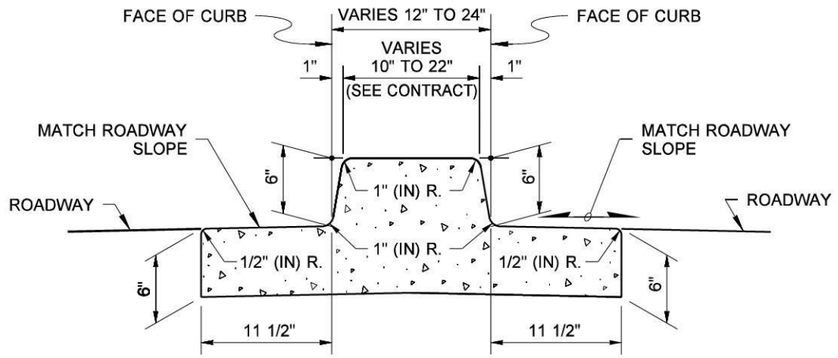

DUAL-FACED CEMENT CONCRETE TRAFFIC CURB AND GUTTER

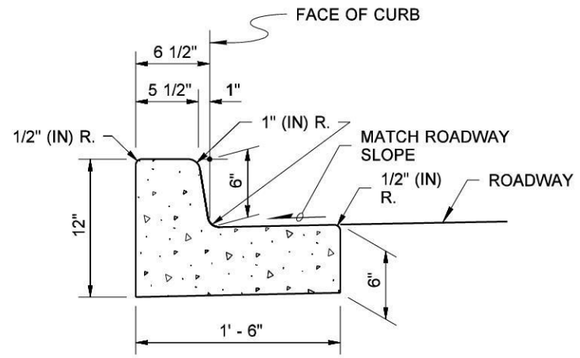

CEMENT CONCRETE TRAFFIC CURB AND GUTTER

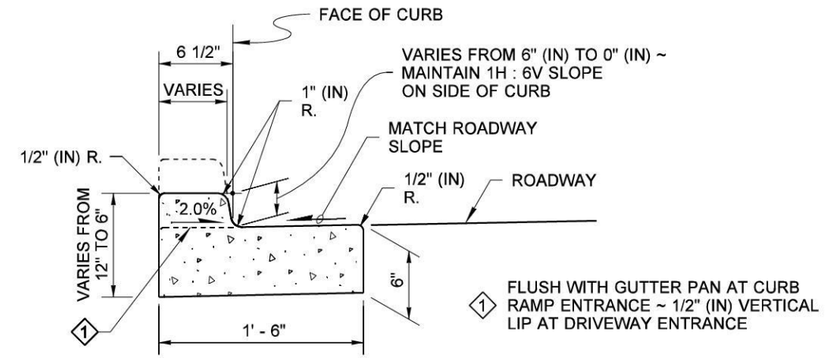

DEPRESSED CURB AND GUTTER SECTION

AT CURB RAMPS AND DRIVEWAY ENTRANCES

DRAWN BY: FERN LIDDELL

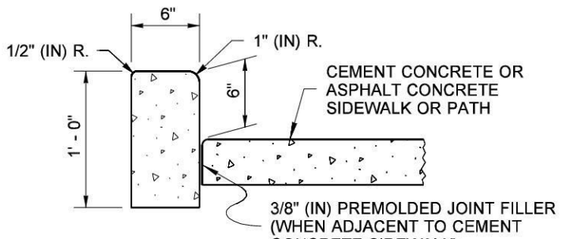

CEMENT CONCRETE PEDESTRIAN CURB

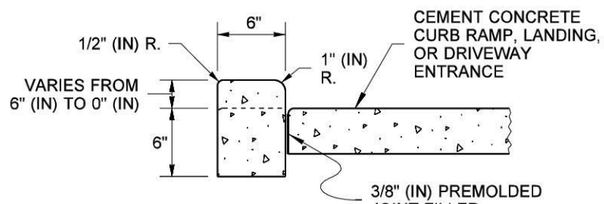

CEMENT CONCRETE PEDESTRIAN CURB

AT CURB RAMPS, LANDINGS, AND DRIVEWAY ENTRANCES

NOTE

1. See **Standard Plan F-30.10** for Curb Expansion and Contraction Joint spacing. See **Standard Specification, Sections 8-04 and 9-04** for additional requirements.

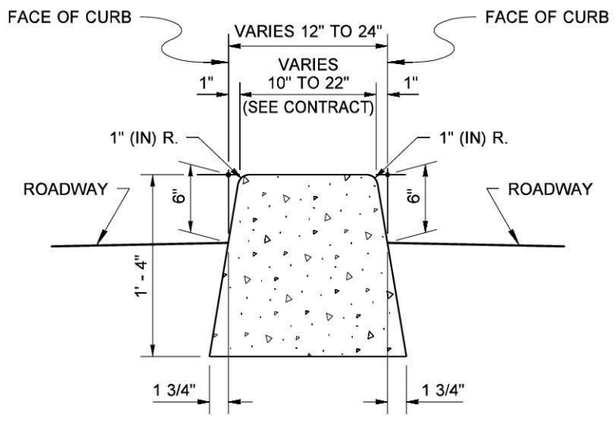

DUAL-FACED CEMENT CONCRETE TRAFFIC CURB

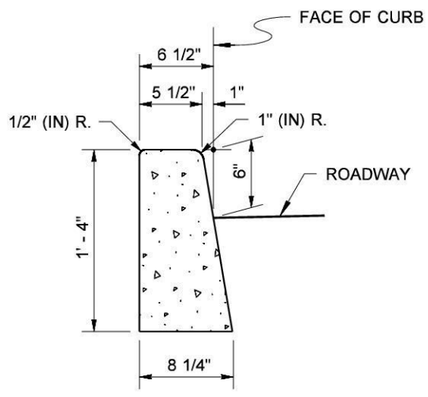

CEMENT CONCRETE TRAFFIC CURB

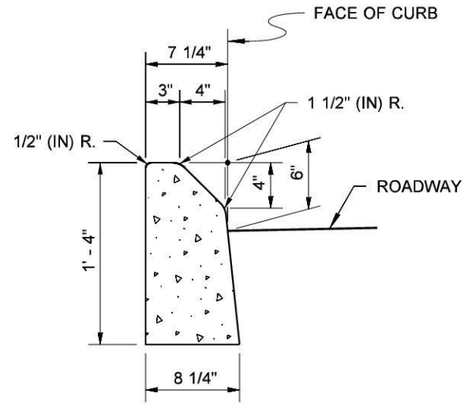

MOUNTABLE CEMENT CONCRETE TRAFFIC CURB



Michael S Fleming

Digitally signed by Michael S Fleming
Date: 2020.09.24 07:39:38 -07'00'

CEMENT CONCRETE CURBS

STANDARD PLAN F-10.12-04

SHEET 1 OF 1 SHEET

APPROVED FOR PUBLICATION
Date: 2020.09.24 07:57:43 -07'00'
STATE DESIGN ENGINEER
Washington State Department of Transportation

Provided to Builders Exchange of WA, Inc. For usage Conditions Agreement see www.bxwa.com - Always Verify Scal

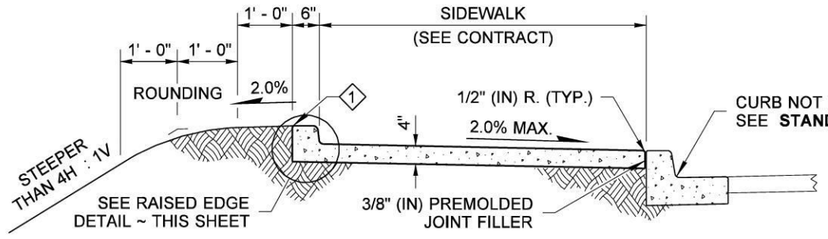

WITH RAISED EDGE

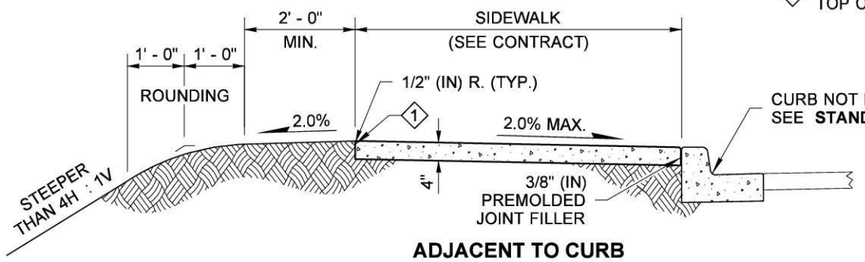

ADJACENT TO CURB
(STEEP FILL SLOPES)

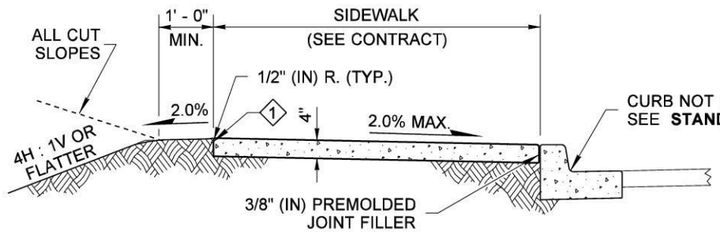

ADJACENT TO CURB

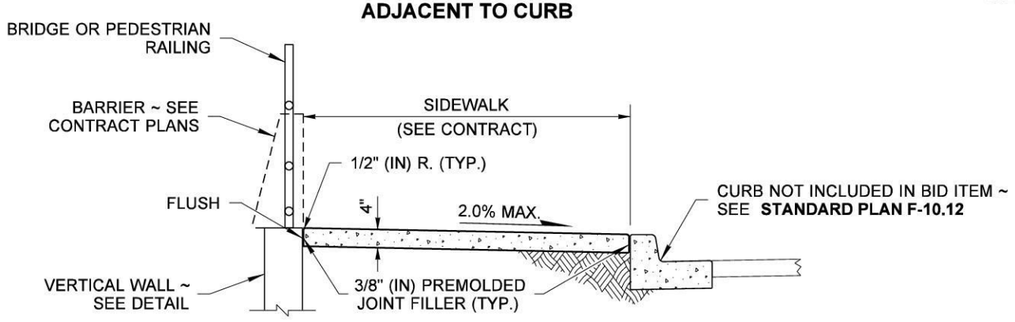

ADJACENT TO CURB AND RAILING OR WALL

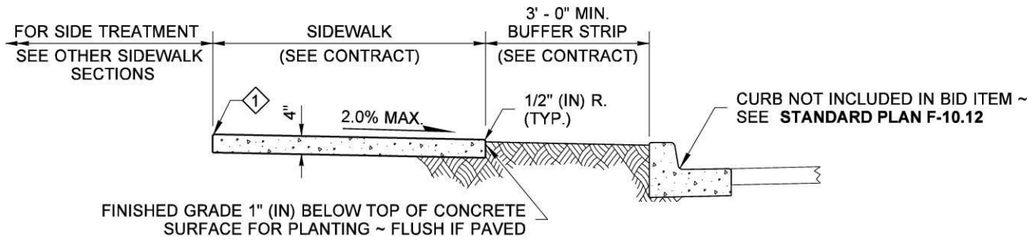

ADJACENT TO BUFFER STRIP

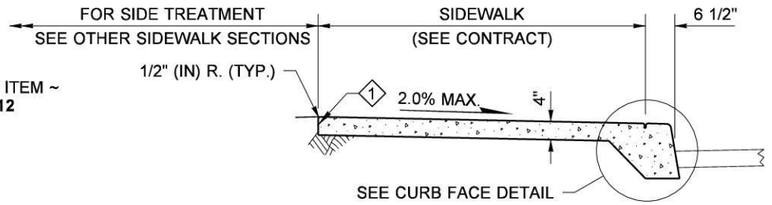

MONOLITHIC CEMENT CONCRETE CURB AND SIDEWALK

1 FINISHED GRADE 1" (IN) BELOW TOP OF CONCRETE SURFACE

NOTE

1. Gratings, Access Covers, Junction Boxes, Cable Vaults, Pull Boxes and other appurtenances within the sidewalk must have slip resistant surfaces, be flush with surface, and match grade of the sidewalk.

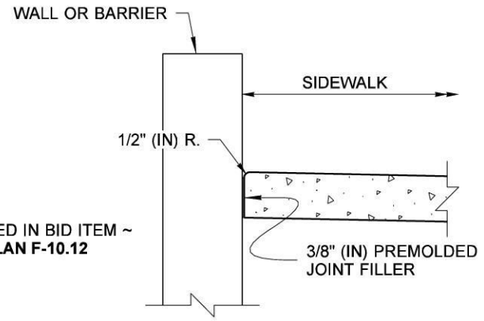

SIDEWALK ADJACENT TO WALL DETAIL

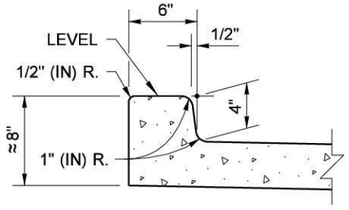

RAISED EDGE DETAIL

EXTEND SIDEWALK TRANSVERSE JOINTS TO INCLUDE RAISED EDGE

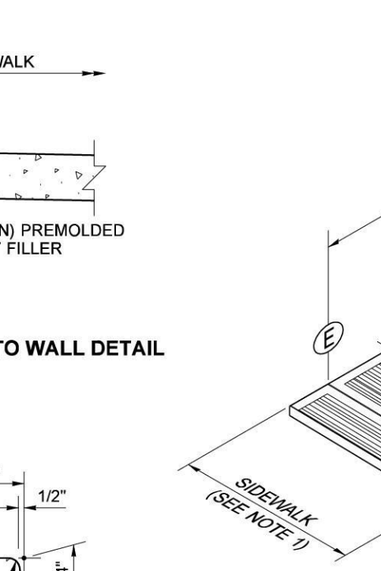

(E) EXPANSION JOINT

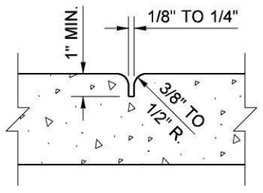

(C) CONTRACTION JOINT

ISOMETRIC VIEW

JOINT AND FINISH DETAIL

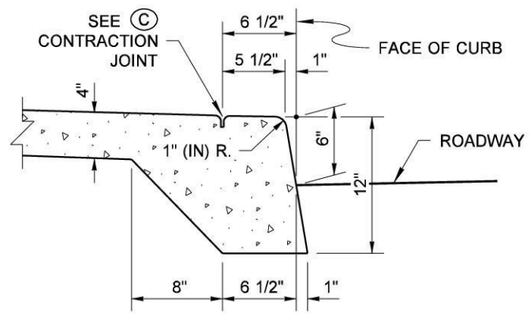

CURB FACE DETAIL

EXTEND SIDEWALK TRANSVERSE EXPANSION JOINTS TO INCLUDE CURB (FULL DEPTH)

DRAWN BY: LISA CYFORD

MICHAEL S. FLEMING
STATE OF WASHINGTON
38777
REGISTERED
PROFESSIONAL ENGINEER

Michael S Fleming
Digitally signed by Michael S Fleming
Date: 2020.09.24 07:40:16 -07'00'

CEMENT CONCRETE SIDEWALK

STANDARD PLAN F-30.10-04

SHEET 1 OF 1 SHEET

APPROVED FOR PUBLICATION
Date: 2020.09.25 15:43:50 -07'00'
STATE DESIGN ENGINEER
Washington State Department of Transportation

Provided to Builders Exchange of WA, Inc. For usage Conditions Agreement see www.bxwa.com - Always Verify Scal

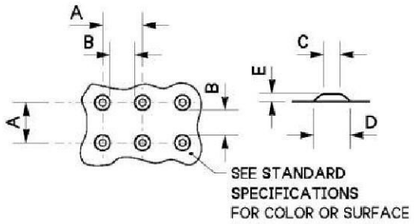

	MIN.	MAX.
A	1.60"	2.40"
B	0.65"	
C	0.45"	0.90"
D	0.90"	1.40"
E	0.20"	0.20"

TRUNCATED DOME DETAILS
(SEE NOTE 3)

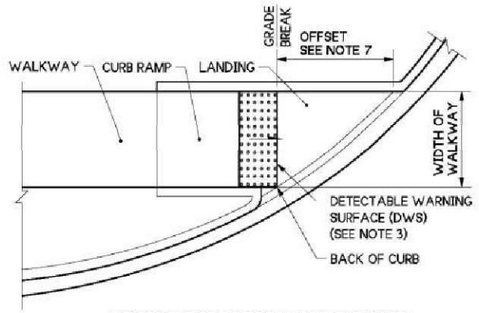

SINGLE DIRECTION CURB RAMP
(GRADE BREAK BETWEEN CURB AND LANDING < 5 FEET FROM BACK OF CURB)
(SEE NOTE 5)

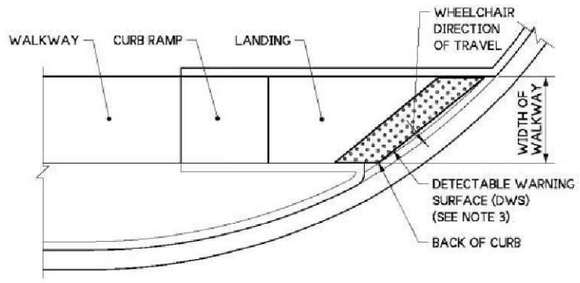

SINGLE DIRECTION CURB RAMP
(GRADE BREAK BETWEEN CURB AND LANDING > 5 FEET FROM BACK OF CURB)
(SEE NOTE 5)

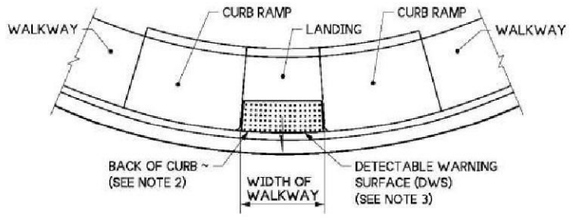

PARALLEL CURB RAMP
(SEE NOTE 6)

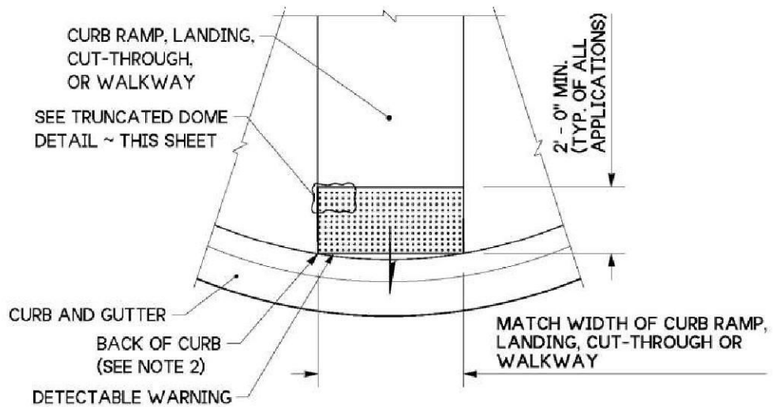

DETECTABLE WARNING SURFACE DETAIL

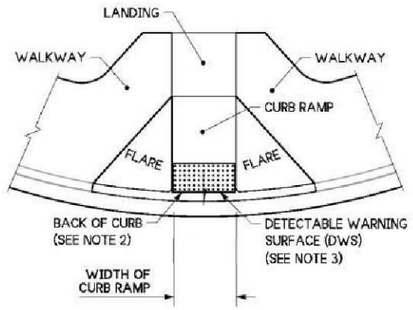

PERPENDICULAR CURB RAMP
(SEE NOTE 6)

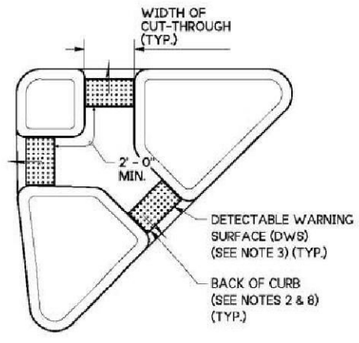

ISLAND CUT-THROUGH

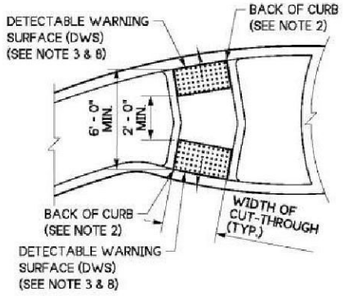

ROUNDABOUT SPLITTER ISLAND

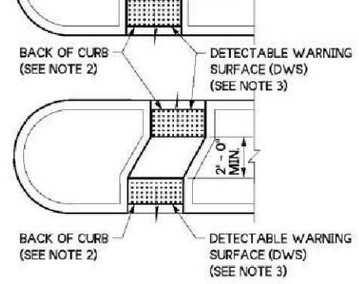

MEDIAN CUT-THROUGH

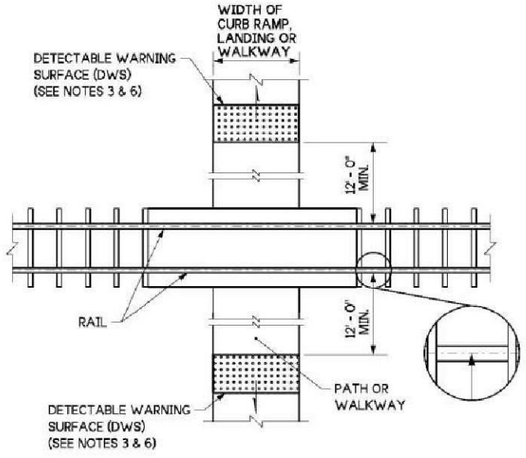

PEDESTRIAN PAILROAD CROSSING

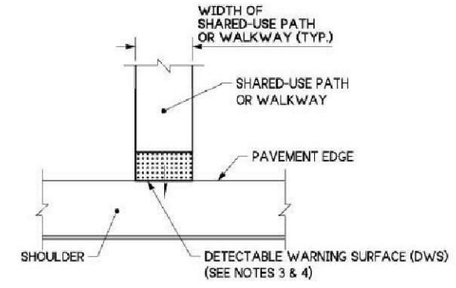

SHARED-USE PATH CONNECTION

NOTES:

1. Permanent Detectable Warning Surfaces (DWS) shall extend the full width of the curb ramp, landing, or other roadway entrance as applicable. Exception: If the manufacturer of the DWS requires a concrete border around the DWS, a variance of up to 2" (in) on each side of the DWS is permitted.

2. Permanent Detectable Warning Surfaces (DWS) shall be placed on a minimum 4" (in) thick concrete pad. The DWS panel shall be placed adjacent to the back of the curb and with no more than a 2" (in) gap between the DWS and the back of the curb measured at the center of the DWS panel. Exception: If the Manufacturer of the selected DWS requires a concrete border around the DWS, a variance of up to 2" (in) from the back of the curb is permitted (measured at the leading corners of the DWS panel).

3. The rows of truncated domes shall be aligned to be parallel to the direction of travel, and perpendicular to the grade break at the back of curb.

4. If curb and gutter are not present, such as a shared-use path connection, the Detectable Warning Surface shall be placed at the pavement edge.

5. See **Standard Plans** for sidewalk and curb ramp details.

6. If a curb ramp is required, the location of the Detectable Warning Surface must be at the bottom of the ramp and within the required distance from the rail crossing.

7. When the grade break between the curb ramp and the landing is less than or equal to 5 feet from the back of curb at all points, place the Detectable Warning Surface on the bottom of the curb ramp directly above the grade break.

8. Glued or stick down Detectable Warning Surfaces are allowed only for temporary work zone applications.

LEGEND
DIRECTION OF TRAVEL

JOANNA W. LOWREY
STATE OF WASHINGTON
42015
REGISTERED
PROFESSIONAL ENGINEER

Jun 4, 2024

DETECTABLE WARNING SURFACE

STANDARD PLAN F-45.10-05

SHEET 1 OF 1 SHEET

APPROVED FOR PUBLICATION

Mark A Hoines Jun 4, 2024

STATE DESIGN ENGINEER

Washington State Department of Transportation

Provided to Builders Exchange of WA, Inc. For usage Conditions Agreement see www.bxwa.com - Always Verify Scal

DRAWN BY: BILL BERENS

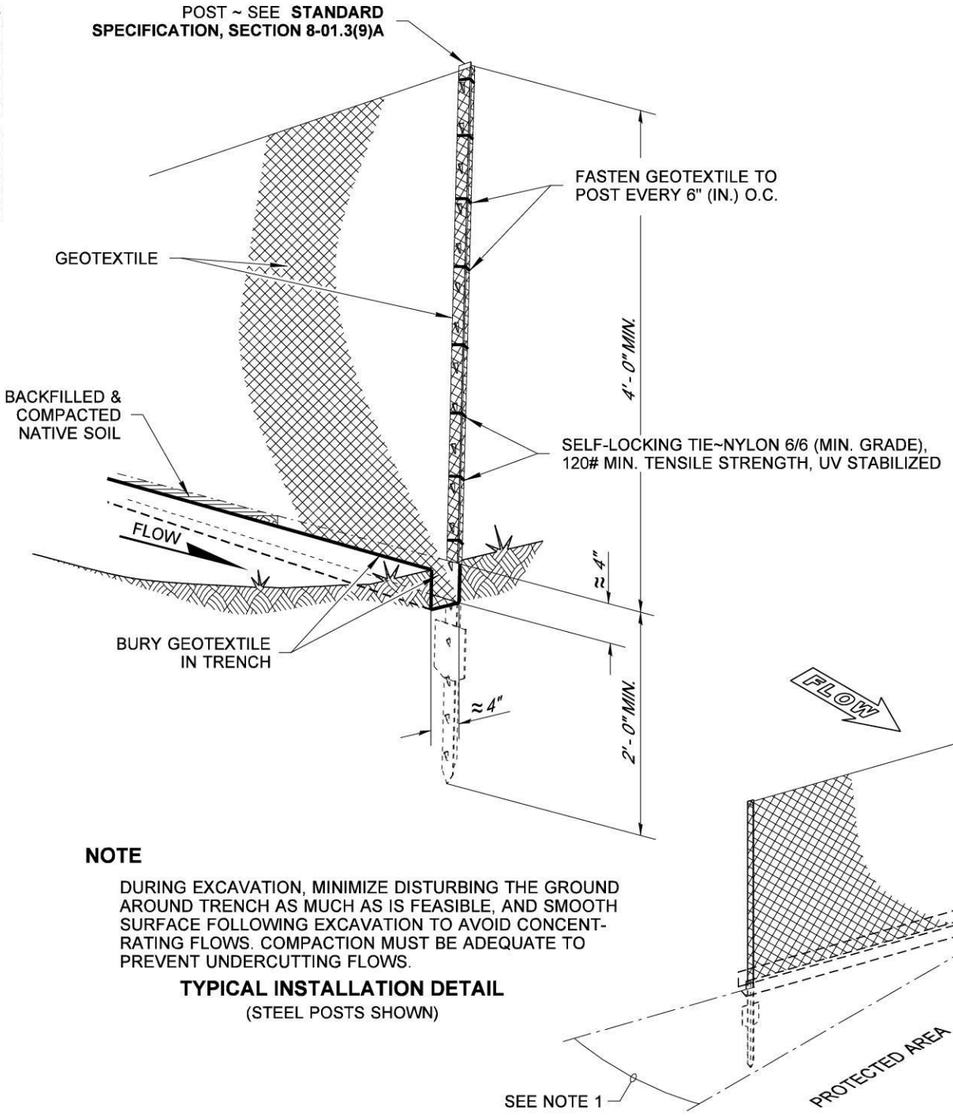

NOTE

DURING EXCAVATION, MINIMIZE DISTURBING THE GROUND AROUND TRENCH AS MUCH AS IS FEASIBLE, AND SMOOTH SURFACE FOLLOWING EXCAVATION TO AVOID CONCENT-RATING FLOWS. COMPACTION MUST BE ADEQUATE TO PREVENT UNDERCUTTING FLOWS.

TYPICAL INSTALLATION DETAIL

(STEEL POSTS SHOWN)

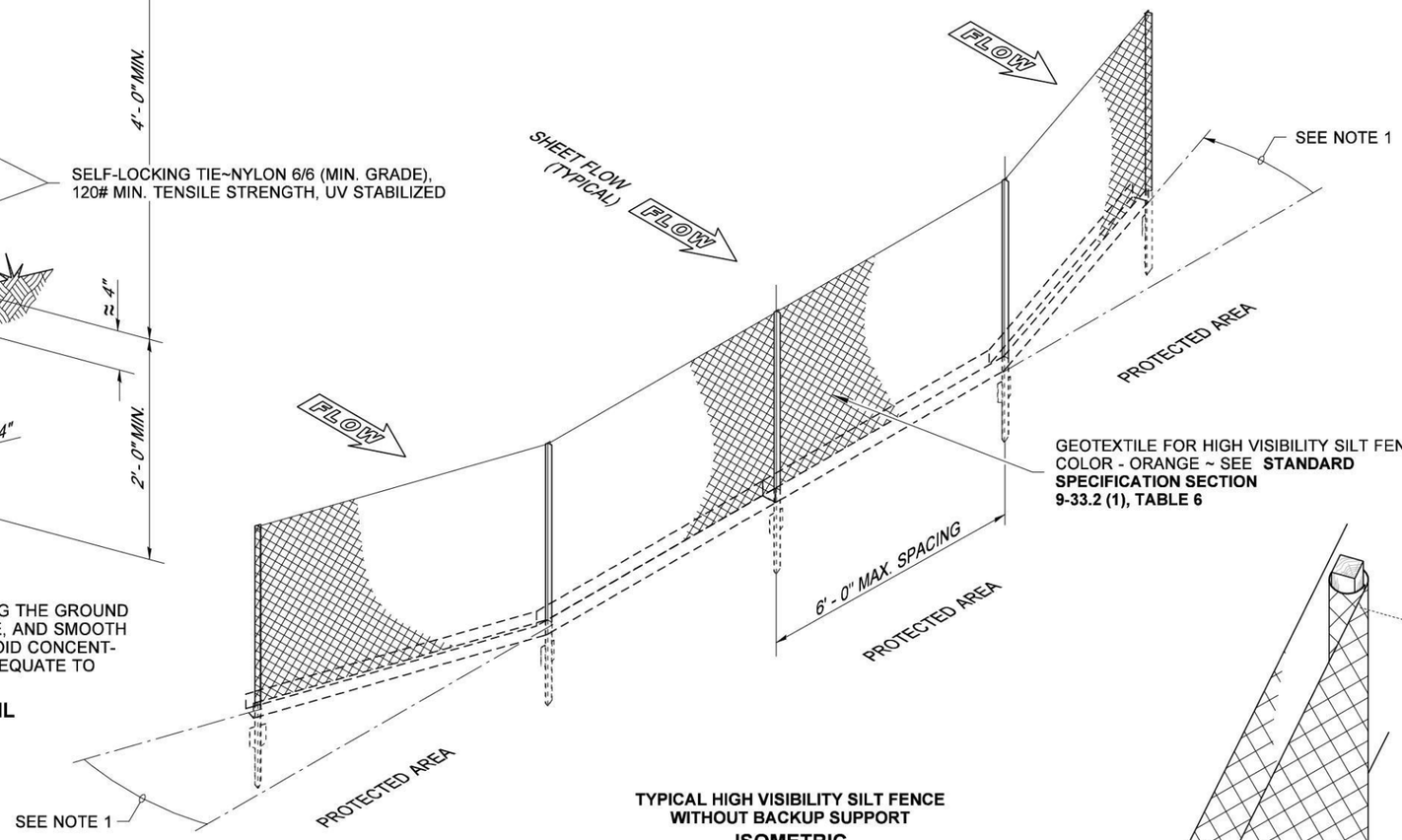

TYPICAL HIGH VISIBILITY SILT FENCE WITHOUT BACKUP SUPPORT

ISOMETRIC

(STEEL POSTS SHOWN)

NOTES

1. Angle Terminal end uphill 24" (in) to 48" (in) to prevent flow around fence (Typical).
2. Perform maintenance in accordance with **Standard Specification, Sections 8-01.3(9)A and 8-01.3(15)**.
3. Splices shall never be placed in low spots or sump locations. If splices are located in low or sump areas, the fence may need to be reinstalled unless the Project Engineer approves the installation.
4. Install silt fencing parallel to mapped contour lines.

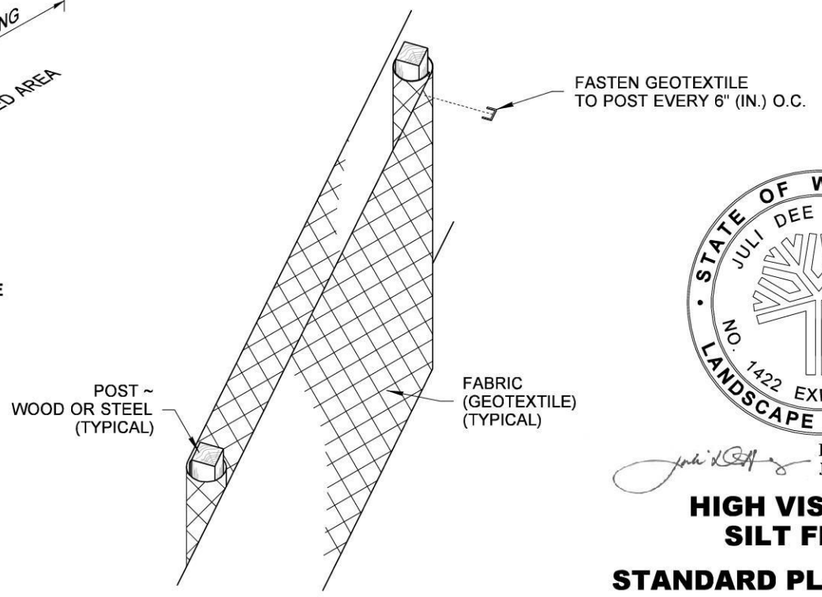

SPLICED FENCE SECTIONS SHALL BE CLOSE ENOUGH TOGETHER TO PREVENT SILT LADEN WATER FROM ESCAPING THROUGH THE FENCE AT THE OVERLAP. JOINING SECTIONS SHALL NOT BE PLACED IN LOW SPOTS OR IN SUMP LOCATIONS.

SPLICE DETAIL

(WOOD POSTS SHOWN)

STATE OF WASHINGTON · JULI DEE HARTWIG · NO. 1422 EXP. 06/21/2021 · LANDSCAPE ARCHITECT

Hartwig, Juli
Jun 4 2019 10:48 AM

HIGH VISIBILITY SILT FENCE

STANDARD PLAN I-30.17-01

SHEET 1 OF 1 SHEET

APPROVED FOR PUBLICATION
Roark, Steve
Jun 12 2019 7:42 AM
STATE DESIGN ENGINEER
Washington State Department of Transportation

Provided to Builders Exchange of WA, Inc. For usage Conditions Agreement see www.bxwa.com - Always Verify Scal

DRAWN BY: LISA CYFORD

NOTES

1. Size the Below Inlet Grate Device (BIGD) for the storm water structure it will service.
2. The BIGD shall have a built-in high-flow relief system (overflow bypass).
3. The retrieval system must allow removal of the BIGD without spilling the collected material.
4. Perform maintenance in accordance with Standard Specification 8-01.3(15).

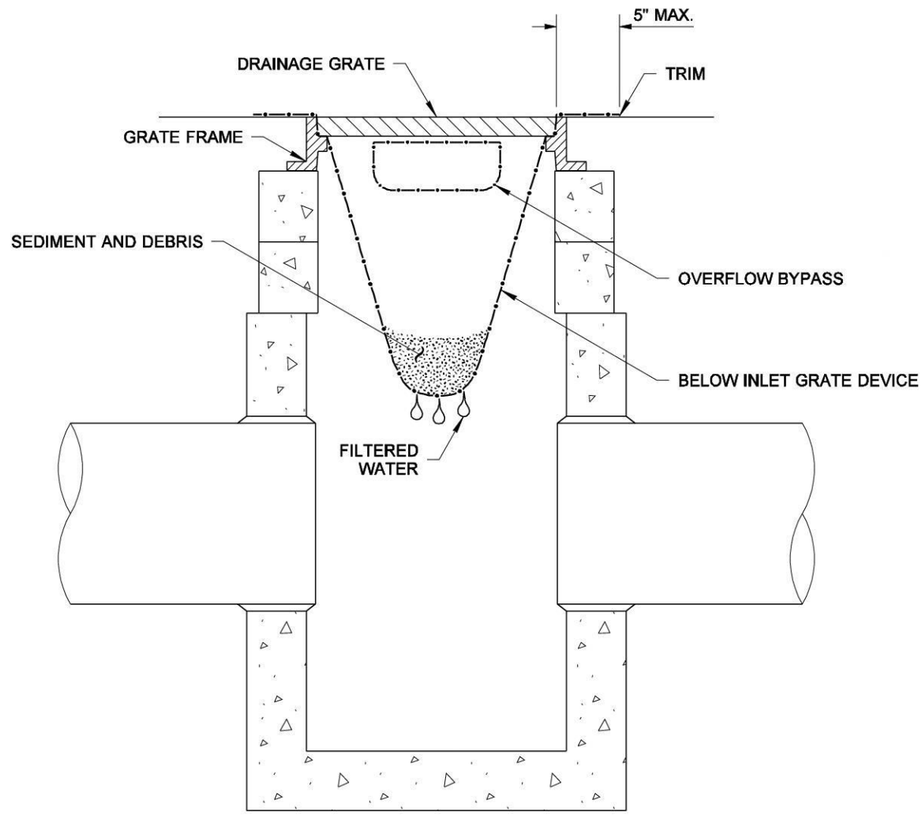

SECTION VIEW

NOT TO SCALE

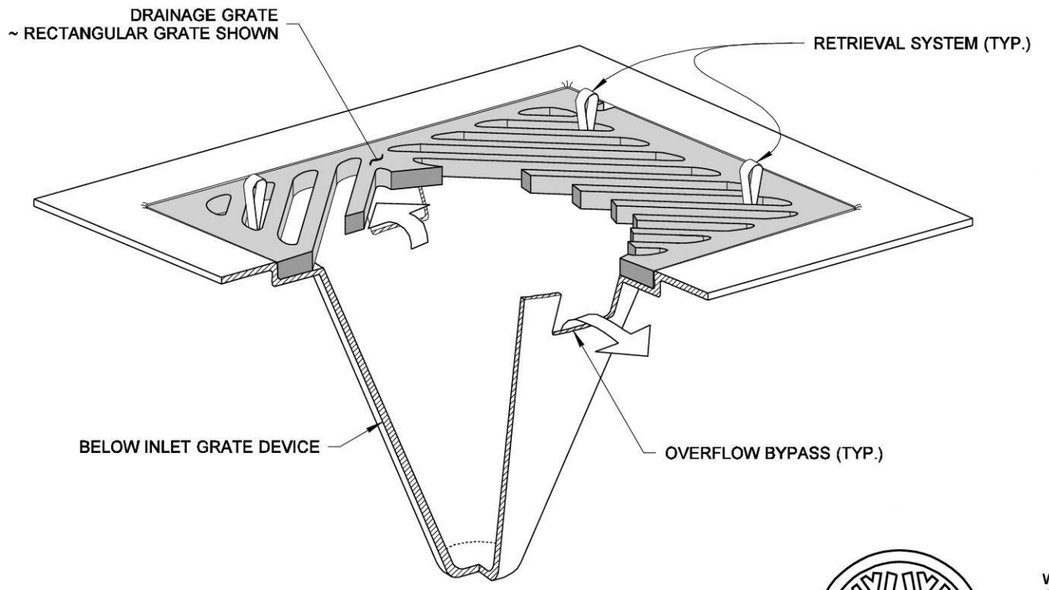

ISOMETRIC VIEW

STATE OF WASHINGTON
REGISTERED
LANDSCAPE ARCHITECT

MARK W. MAURER
CERTIFICATE NO. 000598

NOTE: THIS PLAN IS NOT A LEGAL ENGINEERING DOCUMENT BUT AN ELECTRONIC DUPLICATE. THE ORIGINAL, SIGNED BY THE ENGINEER AND APPROVED FOR PUBLICATION, IS KEPT ON FILE AT THE WASHINGTON STATE DEPARTMENT OF TRANSPORTATION. A COPY MAY BE OBTAINED UPON REQUEST.

STORM DRAIN INLET PROTECTION

STANDARD PLAN I-40.20-00

SHEET 1 OF 1 SHEET

APPROVED FOR PUBLICATION

Pasco Bakotich III — STATE DESIGN ENGINEER

09-20-07 — DATE

Washington State Department of Transportation

Provided to Builders Exchange of WA, Inc. For usage Conditions Agreement see www.bxwa.com - Always Verify Scal

DRAWN BY: BILL BERENS

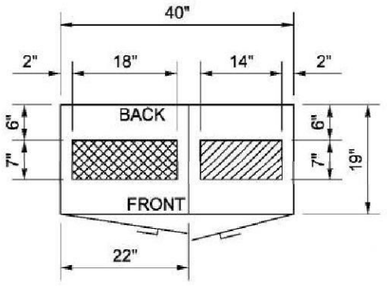

TYPE B MODIFIED SERVICE CABINET

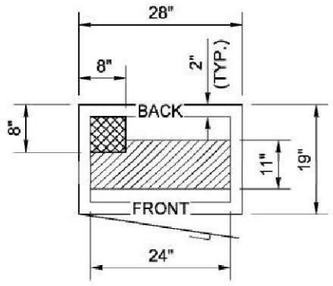

TYPE D SERVICE CABINET

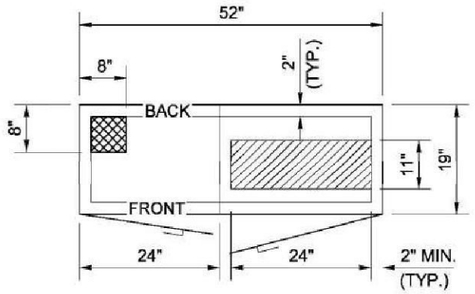

TYPE E SERVICE CABINET

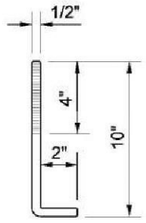

ANCHOR BOLT
(SEE NOTE 1)

CONDUIT PLACEMENT LOCATION AREA

SERVICE: UTILITY CONDUIT AREA
TRANSFORMER: HIGH VOLTAGE CONDUIT AREA

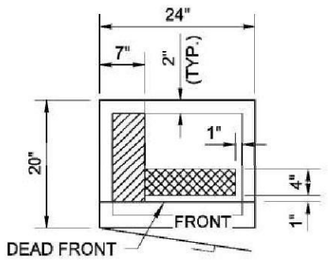

XFMR-S (TRANSFORMER - SMALL) (UP TO 12.5 KVA)

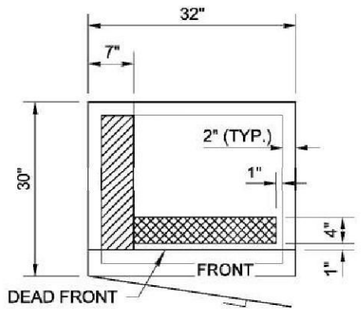

XFMR-L (TRANSFORMER - LARGE) (12.6 TO 37.5 KVA)

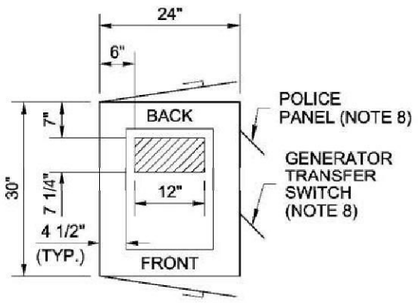

TYPE 33x CABINET

CABINET REFERENCE TABLE			
SERVICE CABINETS	**SIZE W × D (IN)**	**CAPACITY CONDUIT DIAMETER (IN)**	**STANDARD PLAN**
TYPE B MOD.	40" x 19"	12"	J-10.20
TYPE D	28" x 19"	24"	J-10.21
TYPE E	52" x 19"	48"	J-10.22
TRANSFORMER CABINETS	**SIZE W × D (IN)**		
XFMR-S (UP TO 12.5 KVA)	24" × 20"	12"	J-10.25
XFMR-L (12.6 TO 37.5 KVA)	32" × 30"	15"	J-10.25
SIGNAL AND ITS CABINETS	**SIZE W × D (IN)**		
TYPE 33x	24" × 30"	12"	J-12.15
TYPE 33xD	48.5" × 30"	24" (1)	J-12.16
TYPE 342LX	44" × 26"	24" (1)	J-12.16
NEMA P44	44" × 26"	15"	N/A

(1) 12" (IN) OF CONDUIT IN EACH LOCATION SHOWN

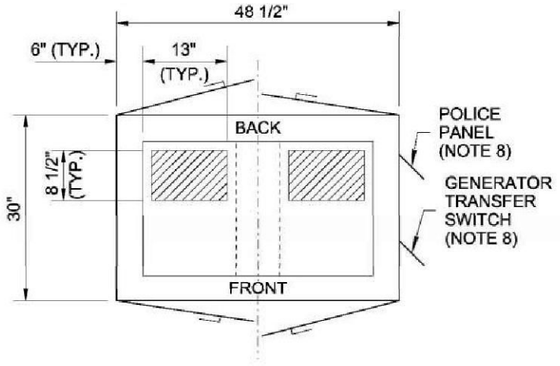

TYPE 33xD CABINET

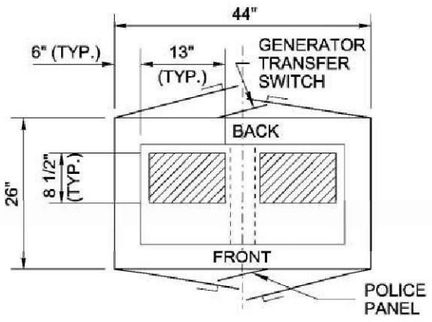

TYPE 342LX CABINET

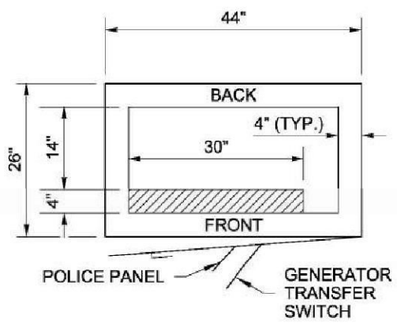

NEMA P44 CABINET

PLAN VIEWS
CABINET ORIENTATION, FOOTPRINT, AND CONDUIT PLACEMENT LOCATIONS

GENERAL NOTES

1. Each pad mounted cabinet shall be attached to the foundation with four 1/2" (in.) x 10" (in.) x 2" (in.) x 4" (in.) anchor bolts (see Anchor Bolt Detail this Sheet). Bolts, washers, and nuts shall be hot-dip galvanized in accordance with **AASHTO M232** and meet the requirements of Standard Specification 9-06.5(1). Stainless steel epoxy anchors may be used as an alternative, and shall be 1/2" (in.) diameter x 9" (in.) or 5/8" (in.) diameter x 8" (in.). Epoxy anchors shall use Type 304 stainless steel hardware: ASTM F593 all threaded rod, ASTM A240 washers, and ASTM F594 nuts. Anchor bolts shall extend 1 1/2" (in.) min. to 2" (in.) max. above the concrete pad.
2. All reinforcing steel shall be embedded 2" (in.) below the surface of concrete.
3. A 1/2" (in.) bead of silicone is required between each cabinet and the concrete foundation.
4. Concrete shall be Class 3000, in accordance with **Standard Specification 8-20.3(4)**. All concrete corners shall have a 1" (in.) chamfer, unless abutting sidewalk, where it shall be square and seaparated from the sidewalk with joint filler.
5. Foundations installed in, or adjacent to, sidewalks shall be constructed with the top flush with the sidewalk surface and grade, not including concrete risers for cabinets.
6. Foundations require additional level clear space to achieve a minimum of 4 feet of level clear space between the face of any cabinet or cabinet riser and the edge of the level clear space. Clear space beyond the edge of the concrete pad shall be made up of crushed surfacing meeting the requirements of **Standard Specification 9-03.9(1)**. Special design may be required where slopes are 3H : 1V or steeper. As an alternative, the concrete pad may be extended out to provide the required clear space.
7. Verify overall pad and concrete riser dimensions with the Engineer prior to placing concrete.
8. Not all Type 33x and 33xD cabinets have a police panel and/or a generator transfer switch (GTS) panel. See Contract for specific cabinet requirements.

WILLIAM FLINT JACKSON
STATE OF WASHINGTON
48821
REGISTERED
PROFESSIONAL ENGINEER

Jackson, Flint
Aug 24 2020 9:36 AM

CABINET ORIENTATION CONDUIT LAYOUT AND FOUNDATION DETAIL
STANDARD PLAN J-10.10-04

SHEET 1 OF 6 SHEETS

APPROVED FOR PUBLICATION
Date: 2020.09.16 10:06:06 -07'00'
STATE DESIGN ENGINEER
Washington State Department of Transportation

Provided to Builders Exchange of WA, Inc. For usage Conditions Agreement see www.bxwa.com - Always Verify Scal

DRAWN BY: BILL BERENS

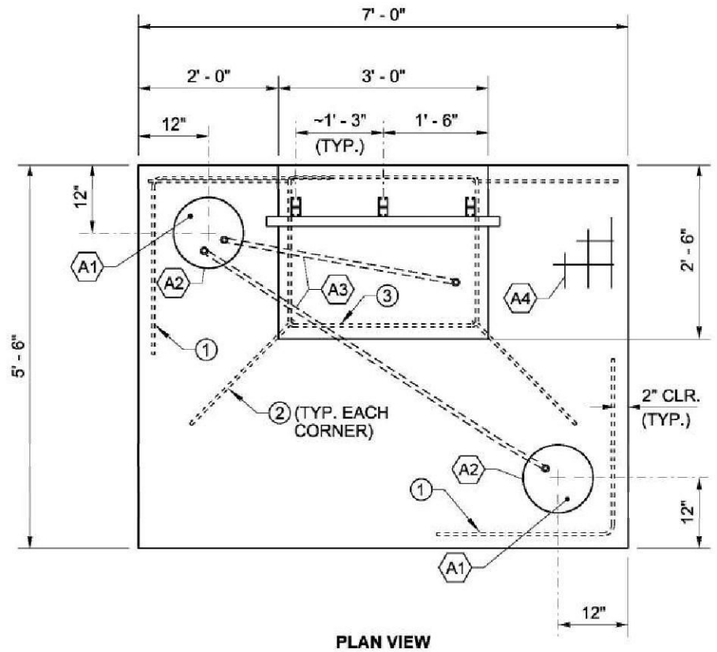

PLAN VIEW

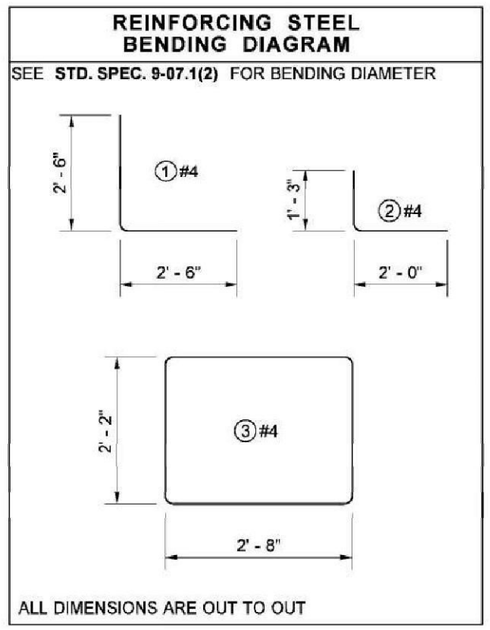

NOTES - SINGLE STRUT MOUNT CABINET (SHEET 2 OF 6)

A1. Drive gound rods before placing concrete. Ground rods shall be a minimum of 6 feet apart. **See Standard Plan J-60.05** for additional details.

A2. Welded Wire Fabirc (WWF) shall be 4.0 (in.) x 4.0 (in.) ~ W4.0 x W4.0 ~ meeting the requirements of **Standard Specification 9-07.7**. As an alternative, a grid of #3 rebar may be used, with bars spaced at 1'- 0" centers laterally and longitudinally.

A3. Install conduit couplings on all conduits. Couplers shall be installed with the top of the coupler flush with the top of concrete. For PVC conduits, the conduit segment above the coupler shall not be glued to the coupler.

A4. Vertical steel supports shall be two continuous 1 5/8" (in.) x 1 5/8" (in.) 12-gage slotted steel channels installed back-to-back (3 pairs required) ~ see Strut Mount Support Details this sheet for connection details. As an alternative, continuous 1 5/8" (in.) x 3 1/4" (in.) 12-gage slotted steel channel may be used in place of each channel pair. Channels shall be embedded a minimum of 12" (in.) into the concrete foundation. Supports shall be evenly spaced, with the center support centered in the concrete riser, and the outer supports tied to the riser rebar hoop.

A5. Horizontal steel supports shall be continuous 1 5/8" (in.) x 1 5/8" (in.) 12-gage slotted steel channels (two required).

A6. Cabinet height shall be determined by the required height of the utility meter - verify height with serving utilty (typically 5 to 6 feet).

A7. Serving utility may require meter socket to be installed on the outside of the cabinet. Utility feeder conduit shall still terminate in the utility section of the cabinet unless otherwise required by the utility.

A8. Additional gravel pad not shown. Gravel pad shall extend two feet in front of the concrete pad for the full width of the concrete pad. If the utility meter socket is installed on the outside of the service cabinet, gravel pad shall also extend three feet from the utility side of the cabinet pad. Final gravel area shall be a rectangle.

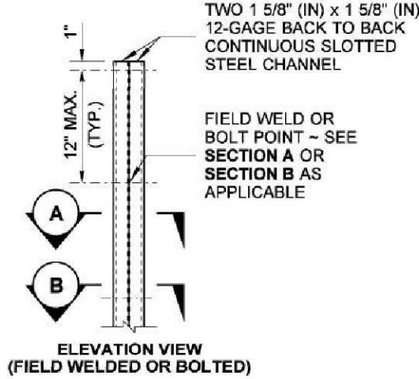

ELEVATION VIEW (FIELD WELDED OR BOLTED)

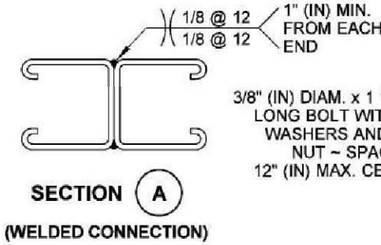

SECTION (A) (WELDED CONNECTION)

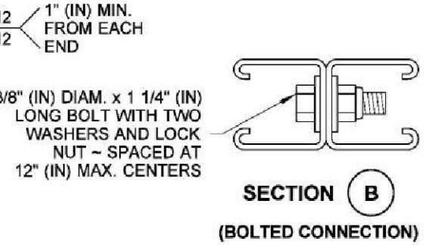

SECTION (B) (BOLTED CONNECTION)

STRUT MOUNT SUPPORT DETAILS
(SEE NOTE A4)

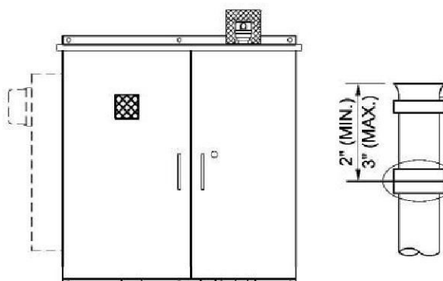

CODUIT TERMINATION DETAIL

FRONT ELEVATION VIEW

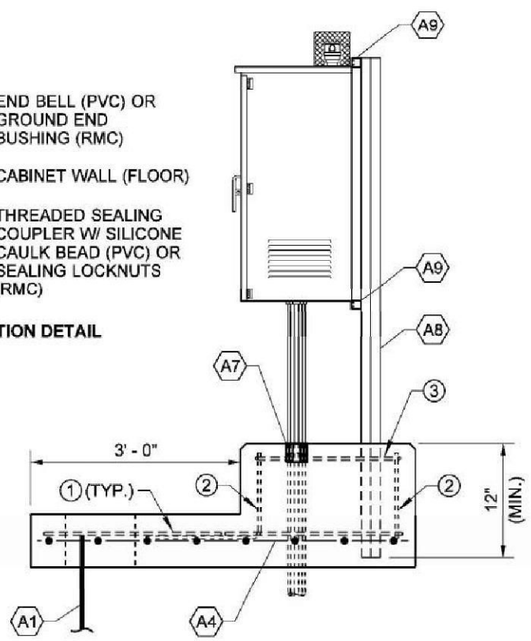

RIGHT SIDE ELEVATION VIEW

KEY NOTES - SHEET 2 OF 6

A1 Ground rod ~ See Note A1, this sheet.
A2 Ground rod well (Ground tile) - 12" diameter concrete
A3 Service ground electrode conduits.
A4 Welded wire fabric ~ See Note A2, this sheet.
A5 Utility entrance conduit. Conduit shall terminate in the utility section of the service cabinet.
A6 Conduits to field equipment. Conduits shall terminate in the customer section of the service cabinet.
A7 Conduit couplers ~ See Note A3, this sheet.
A8 Vertical support steel channel ~ See Note A4, this sheet.
A9 Horizontal support steel channel ~ See Note A5, this sheet.

STRUT MOUNT SERVICE CABINET
(TYPE B MODIFIED SERVICE CABINET SHOWN)



CABINET ORIENTATION CONDUIT LAYOUT AND FOUNDATION DETAIL

STANDARD PLAN J-10.10-04

SHEET 2 OF 6 SHEETS

APPROVED FOR PUBLICATION
Date: 2020.09.16 10:07:05 -07'00'
STATE DESIGN ENGINEER
Washington State Department of Transportation

Provided to Builders Exchange of WA, Inc. For usage Conditions Agreement see www.bxwa.com - Always Verify Scal

DRAWN BY: BILL BERENS

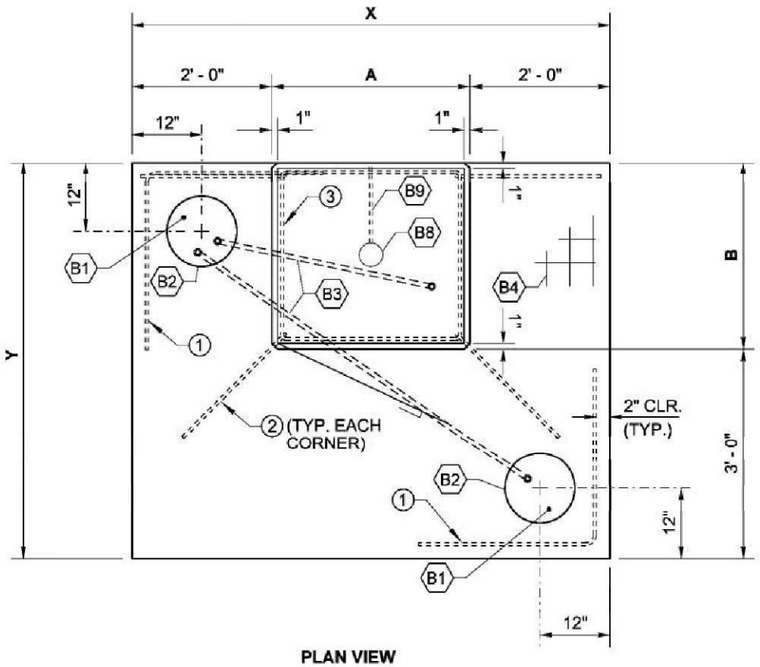

PLAN VIEW

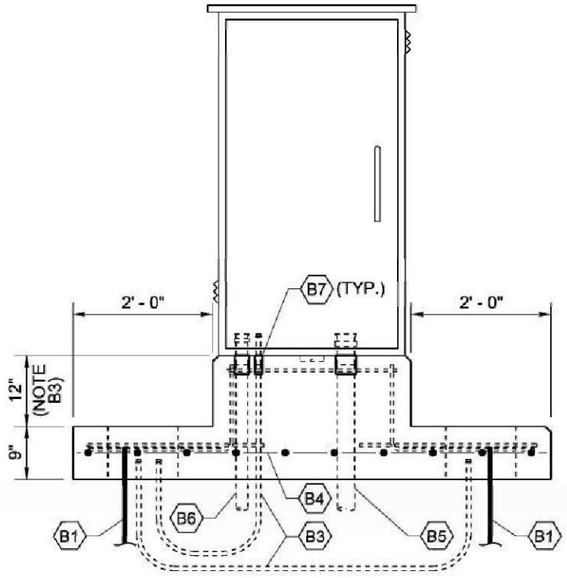

FRONT ELEVATION VIEW

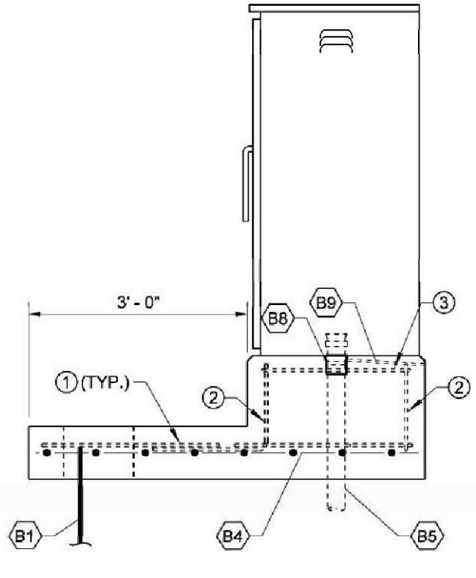

RIGHT SIDE ELEVATION VIEW

SINGLE PAD MOUNT
SERVICE OR TRANSFORMER CABINET
(XFMR-L CABINET SHOWN)

KEY NOTES - SHEET 3 OF 6

(B1) Ground rod ~ See Note B1, this sheet.

(B2) Ground rod well (Ground tile) - 12" diameter concrete

(B3) Service ground electrode conduits.

(B4) Welded wire fabric ~ See Note B2, this sheet.

(B5) Utility entrance (service cabinet) or input power (transformer cabinet) conduit. Conduit shall terminate in the utility or high-voltage section of the cabinet (as applicable).

(B6) Conduits to field equipment. Conduits shall terminate in the customer section (service cabinet) or low-voltage (transformer cabinet) of the cabinet.

(B7) Conduit couplers ~ See Note B4, this sheet.

(B8) 4" (in.) diam. x 1/2" (in.) deep sump.Slope foundation within cabinet footprint toward sump.

(B9) 3/8" (in.) diam. polyethylene or copper tubing for drain. Tubing shall be straight, but slope downward a minimum of 1" (in.).

NOTES - SINGLE PAD MOUNT SERVICE OR TRANSFORMER CABINET (SHEET 3 OF 6)

B1. Drive gound rods before placing concrete. Ground rods shall be a minimum of 6 feet apart. See **Standard Plan J-60.05** for additional details.

B2. Welded Wire Fabirc (WWF) shall be 4.0 (in.) x 4.0 (in.) ~ W4.0 x W4.0 ~ meeting the requirements of **Standard Specification 9-07.7**. As an alternative, a grid of #3 rebar may be used, with bars spaced at 1'-0" centers laterally and longitudinally.

B3. Omit concrete riser and bar #3 for Type D and Type E service cabinets.

B4. Install conduit couplings on all conduits. Couplers shall be installed with the top of the coupler flush with the top of concrete. For PVC conduits, the conduit segment above the coupler shall not be glued to the coupler.

B5. Conduits shall extend a minimum of 2" (in.) and a maximum of 3" (in.) into the cabinet, as measured from the concrete surface to the top of the end bell (PVC) or ground bushing (RMC).

B6. Serving utility may require meter socket to be installed on the outside of the cabinet. Utility feeder conduit shall still terminate in the utility section of the cabinet unless otherwise required by the utility.

B7. Additional gravel pad not shown. Gravel pad shall extend two feet in front of the concrete pad for the full width of the concrete pad. If the utility meter socket is installed on the outside of the service cabinet, gravel pad shall also extend three feet from the side of the cabinet pad where the meter is installed. Final gravel area shall be a rectangle.

B8. See **Standard Plan J-10.14** for additional details when service or transformer cabinet is installed in fence line.

FOUNDATION SIZE REFERENCE TABLE

SERVICE CABINETS	PAD WIDTH (X)	PAD DEPTH (Y)	RISER WIDTH (A)	RISER DEPTH (B)	HOOP ③ WIDTH (BA)	HOOP ③ DEPTH (BB)
TYPE D	6' - 4"	3' - 8"	N/A	N/A	N/A	N/A
TYPE E	8' - 4"	3' - 8"	N/A	N/A	N/A	N/A
TRANSFORMER CABINETS	**PAD WIDTH (X)**	**PAD DEPTH (Y)**	**RISER WIDTH (A)**	**RISER DEPTH (B)**	**HOOP ③ WIDTH (BA)**	**HOOP ③ DEPTH (BB)**
XFMR-S (UP TO 12.5 KVA)	6' - 2"	4' - 11"	2' - 2"	1' - 11"	1' - 10"	1' - 7"
XFMR-L (12.6 TO 37.5 KVA)	6' - 10"	5' - 8"	2' - 10"	2' - 8"	2' - 6"	2' - 4"

REINFORCING STEEL BENDING DIAGRAM

SEE **STD. SPEC. 9-07.1(2)** FOR BENDING DIAM.

ALL DIMENSIONS ARE OUT TO OUT

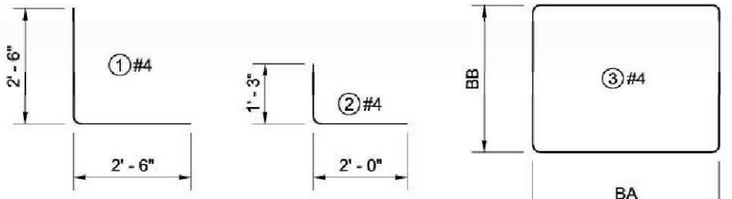

NOTE: BAR 3 DIMENSIONS ARE ALWAYS FOUR INCHES SMALLER THAN THEIR ASSOCIATED CONCRETE RISER DIMENSIONS.

WILLIAM FLINT JACKSON
STATE OF WASHINGTON
48821
REGISTERED
PROFESSIONAL ENGINEER

Jackson, Flint
Aug 24 2020 9:37 AM

CABINET ORIENTATION CONDUIT LAYOUT AND FOUNDATION DETAIL

STANDARD PLAN J-10.10-04

SHEET 3 OF 6 SHEETS

APPROVED FOR PUBLICATION
Date: 2020.09.16 10:07:52 -07'00'
STATE DESIGN ENGINEER
Washington State Department of Transportation

Provided to Builders Exchange of WA, Inc. For usage Conditions Agreement see www.bxwa.com - Always Verify Scal

DRAWN BY: BILL BERENS

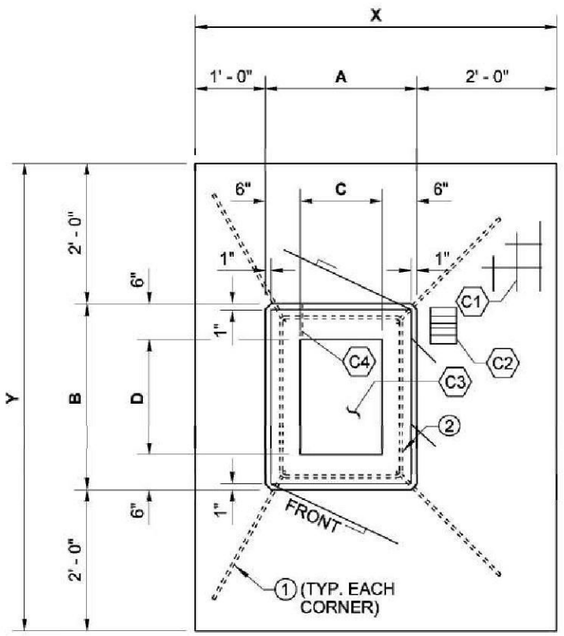

PLAN VIEW

KEY NOTES - SHEET 4 OF 6

(C1) Welded wire fabric ~ See Note C1, this sheet.

(C2) Generator Tie-Down Anchor ~ See Note C2, this sheet.

(C3) Cabinet Well ~ See Note C3, this sheet.

(C4) 3/8" (in.) diam. polyethylene or copper tubing for drain. Tubing shall be straight, but slope downward a minimum of 1" (in.)

(C5) Conduits ~ See Contract Plans for number, type, and function.

(C6) Conduit couplers ~ See Note C4, this sheet.

REINFORCING STEEL BENDING DIAGRAM

SEE STD. SPEC. 9-07.1(2) FOR BENDING DIAM.

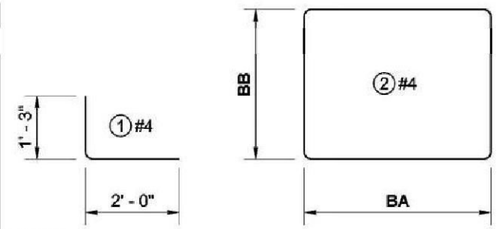

NOTE:
ALL DIMENSIONS ARE OUT TO OUT.
BAR 3 DIMENSIONS ARE ALWAYS FOUR INCHES SMALLER THAN THEIR ASSOCIATED CONCRETE RISER DIMENSIONS.

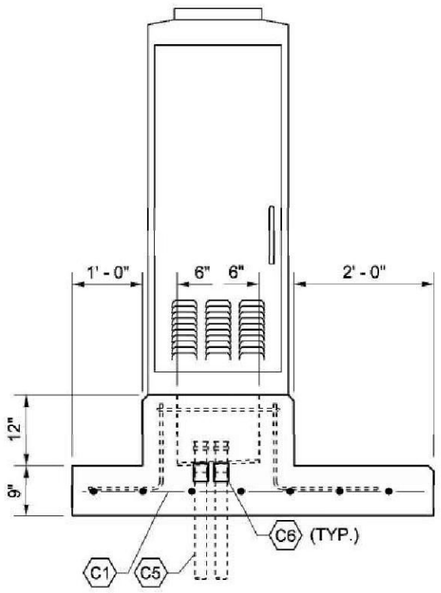

FRONT ELEVATION VIEW

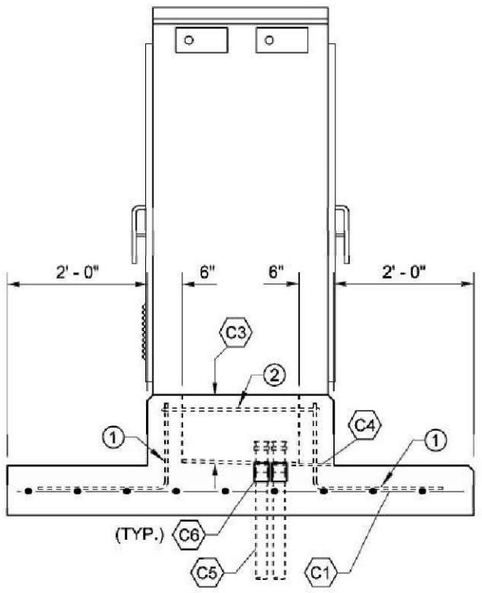

RIGHT SIDE ELEVATION VIEW

SINGLE PAD MOUNT TRAFFIC SIGNAL OR ITS CABINET
(TYPE 33x CABINET SHOWN)

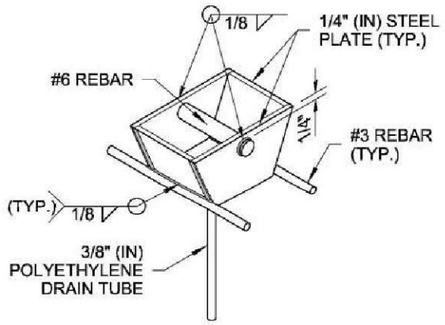

ISOMETRIC VIEW

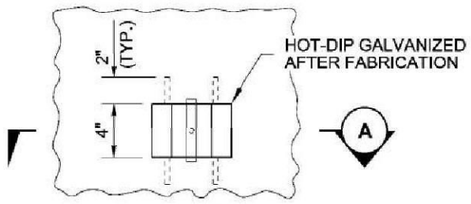

PLAN VIEW

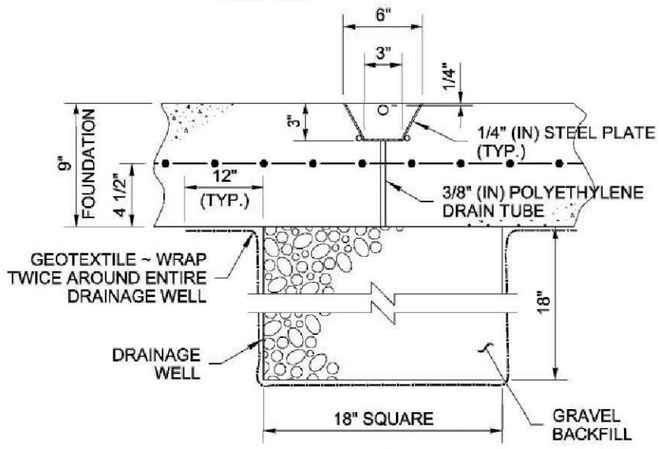

ELEVATION VIEW

SECTION (A)

GENERATOR TIE-DOWN ANCHOR
(FABRICATE IF NOT AVAILABLE COMMERCIALLY)

NOTES - SINGLE PAD MOUNT TRAFFIC SIGNAL OR ITS CABINET (SHEET 4 OF 6)

C1. Welded Wire Fabirc (WWF) shall be 4.0 (in.) x 4.0 ~ W4.0 (in.) x W4.0 ~ meeting the requirements of **Standard Specification 9-07.7**. As an alternative, a grid of #3 rebar may be used, with bars spaced at 1'- 0" centers laterally and longitudinally.

C2. Generator Tie-Down Anchors are only required for cabinets with Generator Transfer Switches (GTS). Anchor shall along the side of the cabinet near the back corner of the cabinet riser as shown.

C3. Cabinet well shall be a nominal 10" (in.) deep, sloping towards the corner where the drain tube is installed. Well dimensions are 12" (in.) smaller than the riser length and width dimensions (**A** and **B**). See Cabinet Well Reference Table, this sheet.

C4. Install conduit couplings on all conduits. Couplers shall be installed with the top of the coupler flush with the top of concrete. For PVC conduits, the conduit segment above the coupler shall not be glued to the coupler.

C5. Conduits shall extend a minimum of 2" (in.) and a maximum of 3" (in.) into the cabinet, as measured from the concrete surface to the top of the end bell (PVC) or ground bushing (RMC).

C6. Additional gravel pad not shown. Gravel pad shall extend two feet beyond the front, right, and back of the cabinet pad where the pad is two feet wide. Final gravel area shall be a rectangle.

CABINET WELL REFERENCE TABLE

SIGNAL AND ITS CABINETS	WELL WIDTH (C)	WELL LENGTH (D)
TYPE 33x	1' - 2"	1' - 8"
TYPE 33xD	3' - 2"	1' - 8"
TYPE 342LX / NEMA P44	2' - 10"	1' - 4"

FOUNDATION SIZE REFERENCE TABLE

SIGNAL AND ITS CABINETS	PAD WIDTH (X)	PAD DEPTH (Y)	RISER WIDTH (A)	RISER DEPTH (B)	HOOP ② WIDTH (BA)	HOOP ② DEPTH (BB)
TYPE 33x	5' - 2"	6' - 8"	2' - 2"	2' - 8"	1' - 10"	2' - 4"
TYPE 33xD	6' - 3"	6' - 8"	4 - 3"	2' - 8"	3' - 11"	2' - 4"
TYPE 342LX / NEMA P44	5' - 10"	6' - 4"	3' - 10"	2' - 4"	3' - 6"	2' - 0"

WILLIAM FLINT JACKSON
STATE OF WASHINGTON
48821
REGISTERED
PROFESSIONAL ENGINEER

Jackson, Flint
Aug 24 2020 9:37 AM

CABINET ORIENTATION CONDUIT LAYOUT AND FOUNDATION DETAIL

STANDARD PLAN J-10.10-04

SHEET 4 OF 6 SHEETS

APPROVED FOR PUBLICATION
Date: 2020.09.16 10:08:38 -07'00'
STATE DESIGN ENGINEER
Washington State Department of Transportation

Provided to Builders Exchange of WA, Inc. For usage Conditions Agreement see www.bxwa.com - Always Verify Scal

DRAWN BY: BILL BERENS

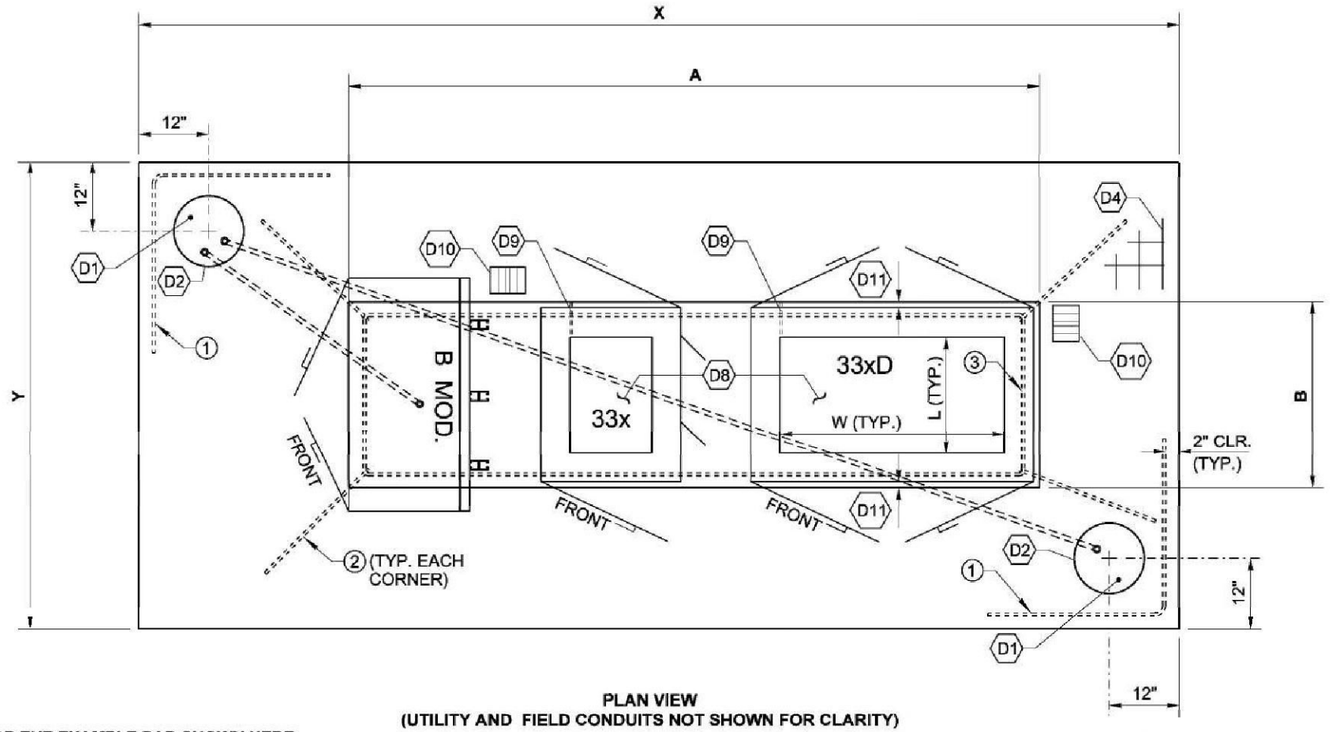

PLAN VIEW
(UTILITY AND FIELD CONDUITS NOT SHOWN FOR CLARITY)

FOR THE EXAMPLE PAD SHOWN HERE:

- SPACE BETWEEN TYPE B MOD. CABINET AND 33x CABINET IS 6" (IN.)
- SPACE BETWEEN 33x AND 33xD CABINET IS 1' - 0"
- OVERALL PAD WIDTH (X) = 14' - 8"
- OVERALL PAD DEPTH (Y) = 6' - 8"
- OVERALL RISER WIDTH (A) = 9' - 8"
- OVERALL RISER DEPTH (B) = 2' - 8"

FOUNDATION PAD DIMENSIONS X, Y, A, AND B SHOULD BE PROVIDED IN THE CONTRACT PLANS.

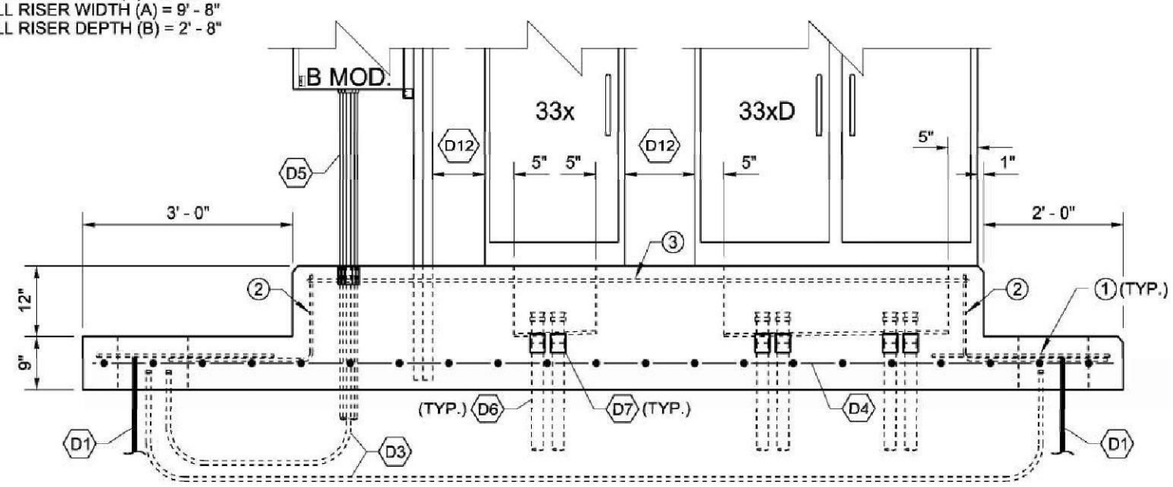

FRONT ELEVATION VIEW

TYPE A (NARROW) MULTI-CABINET FOUNDATION PAD
(TYPE B MODIFIED SERVICE CABINET, TYPE 33x CABINET, AND TYPE 33xD CABINET SHOWN)

NOTES - TYPE A (NARROW) AND TYPE B (WIDE) MULTI-CABINET FOUNDATION PAD (SHEETS 5 AND 6 OF 6)

D1. Drive gound rods before placing concrete. Ground rods shall be a minimum of 6 feet apart. See **Standard Plan J-60.05** for additional details.

D2. Welded Wire Fabirc (WWF) shall be 4.0 (in.) x 4.0 (in.) ~ W4.0 x W4.0 ~ meeting the requirements of **Standard Specification 9-07.7**. As an alternative, a grid of #3 rebar may be used, with bars spaced at 1'-0" centers laterally and longitudinally.

D3. See Sheet 3 for reinforcing steel bending diagrams.

D4. Concrete riser shall not include Type D or Type E Service Cabinets.

D5. Install conduit couplings on all conduits. Couplers shall be installed with the top of the coupler flush with the top of concrete. For PVC conduits, the conduit segment above the coupler shall not be glued to the coupler.

D6. Conduits shall extend a minimum of 2" (in.) and a maximum of 3" (in.) into the cabinet, as measured from the concrete surface to the top of the end bell (PVC) or ground bushing (RMC).

D7. Serving utility may require meter socket to be installed on the outside of the cabinet. Utility feeder conduit shall still terminate in the utility section of the cabinet unless otherwise required by the utility.

D8. Additional gravel pad not shown. Gravel pad shall extend two feet in front of the concrete pad for the full width of the concrete pad. If the utility meter socket is installed on the outside of the service cabinet, gravel pad shall also extend three feet from the side of the cabinet pad where the meter is installed. Final gravel area shall be a rectangle.

D9. Cabinet wells shall be provided for all Type 33x, Type 33xD, Type 342LX, and NEMA P44 Cabinets. See Note C3 on sheet 4 for Cabinet Well dimensions.

D10. At least one Generator Tie-Down Anchor shall be provided for each multi-cabinet pad foundation. A second Anchor shall be provided if there is a second cabinet with a Generator Transfer Switch (GTS). If a service or transformer cabinet is present, install one Anchor at either of the locations shown, closest to the cabinet with the GTS. If there is no service or transformer cabinet, install Anchors only at the ends of the cabinet riser.

KEY NOTES - SHEET 5 OF 6

D1 Ground rod ~ See Note D1, this sheet.

D2 Ground rod well (Ground tile) - 12" diameter concrete

D3 Service ground electrode conduits.

D4 Welded wire fabric ~ See Note D2, this sheet.

D5 Utility entrance (service cabinet) or input power (transformer cabinet) conduit. Conduit shall terminate in the utility or high voltage section of the cabinet (as applicable).

D6 Conduits to field equipment. Conduits shall terminate in the customer section (service cabinet) or low-voltage (transformer cabinet) of the cabinet.

D7 Conduit couplers ~ See Note D5, this sheet.

D8 Cabinet Well ~ See Note D9, this sheet.

D9 3/8" (in.) diam. polyethylene or copper tubing for drain. Tubing shall be straight, but slope downward a minimum of 1" (in.)

D10 Generator Tie-Down Anchor ~ See Note D10, this sheet.

D11 Riser lip shall be 1" (in.) from the base edge of the largest cabinet to the face of the concrete riser. Smaller cabinets shall be positioned so that the front riser lip is 1" (in.) wide.

D12 For a Type A (Narrow) Pad, cabinet spacing shall be as follows:
a. 12" (in.) between cabinets where at least one cabinet has a police panel or GTS door.
b. 6" (in.) between cabinets where no police panel or GTS door is present.

WILLIAM FLINT JACKSON
STATE OF WASHINGTON
48821
REGISTERED
PROFESSIONAL ENGINEER

Jackson, Flint
Aug 24 2020 9:37 AM

CABINET ORIENTATION CONDUIT LAYOUT AND FOUNDATION DETAIL
STANDARD PLAN J-10.10-04

SHEET 5 OF 6 SHEETS

APPROVED FOR PUBLICATION
Roark, Steve
Digitally signed by Roark, Steve
Date: 2020.09.16 10:09:31 -07'00'
STATE DESIGN ENGINEER
Washington State Department of Transportation

Provided to Builders Exchange of WA, Inc. For usage Conditions Agreement see www.bxwa.com - Always Verify Scal

DRAWN BY: BILL BERENS

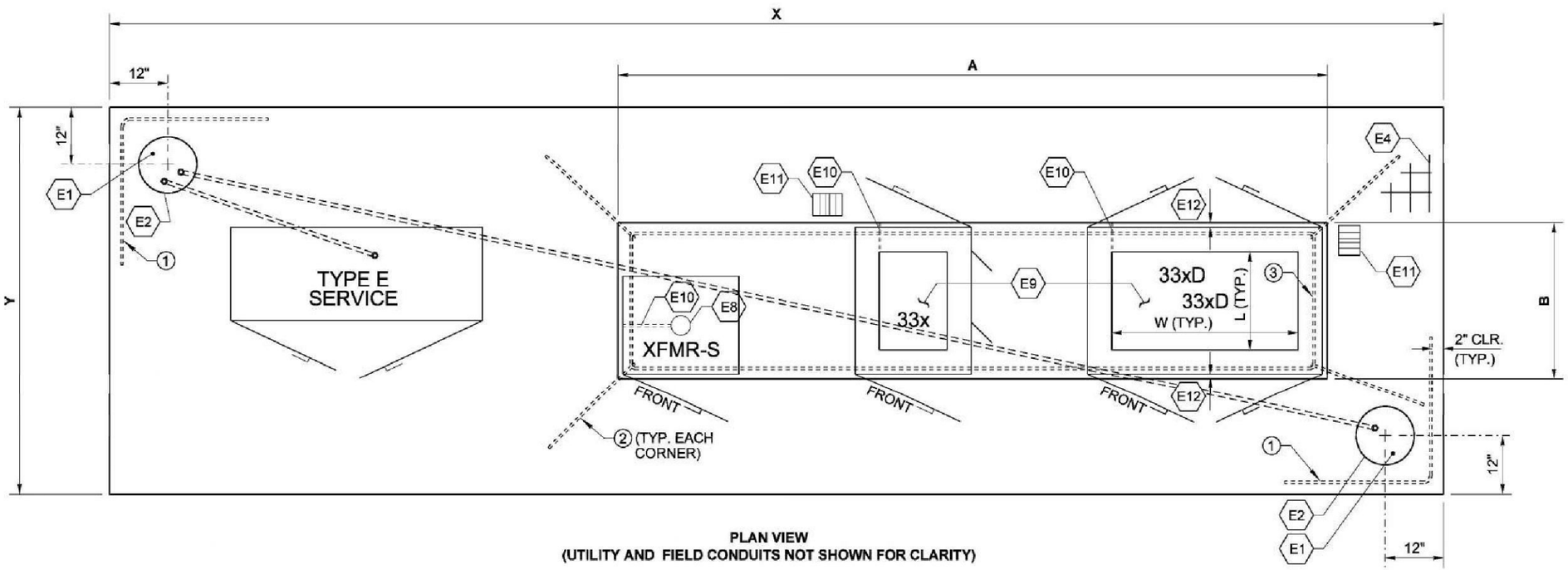

PLAN VIEW
(UTILITY AND FIELD CONDUITS NOT SHOWN FOR CLARITY)

CABINET CLEARANCE REFERENCE TABLE

SERVICE CABINETS	LEFT SIDE	RIGHT SIDE	TRANSFORMER CABINETS	LEFT SIDE	RIGHT SIDE	SIGNAL AND ITS CABINETS	LEFT SIDE	RIGHT SIDE
TYPE B MOD.	1' - 10"	1' - 6"	XFMR-S (UP TO 12.5 KVA)	2' - 0"	6"	TYPE 33x	2' - 0"	2' - 0"
TYPE D	2' - 4"	6"				TYPE 33xD	2' - 0"	2' - 0"
TYPE E	2' - 0"	2' - 4"	XFMR-L (12.6 TO 37.5 KVA)	3' - 8"	6"	TYPE 342LX	1' - 10"	1' - 10"
						NEMA P44	3' - 8" (1)	3' - 8"

(1) 6" FOR NEMA P44 CABINETS WITHOUT A REAR DOOR

FOR THE EXAMPLE PAD SHOWN HERE:

- SPACE BETWEEN TYPE E CABINET AND FACE OF CONCRETE RISER IS 2' - 4"
- SPACE BETWEEN XFMR-S CABINET AND 33x CABINET IS 2' - 0"
- SPACE BETWEEN 33x AND 33xD CABINET IS 2' - 0"
- OVERALL PAD WIDTH (X) = 22' - 11"
- OVERALL PAD DEPTH (Y) = 6' - 8"
- OVERALL RISER WIDTH (A) = 12' - 3"
- OVERALL RISER DEPTH (B) = 2' - 8"

FOUNDATION PAD DIMENSIONS X, Y, A, AND B SHOULD BE PROVIDED IN THE CONTRACT PLANS.

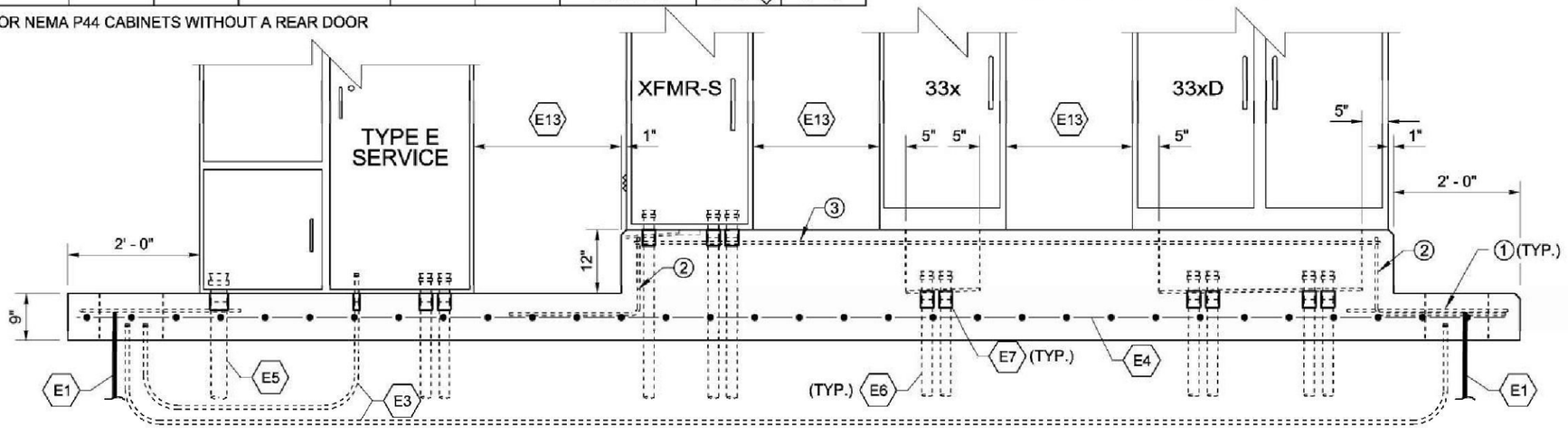

FRONT ELEVATION VIEW

TYPE B (WIDE) MULTI-CABINET FOUNDATION PAD
(TYPE E SERVICE CABINET, XFMR-S CABINET, TYPE 33x CABINET, AND TYPE 33xD CABINET SHOWN)

KEY NOTES - SHEET 6 OF 6

- E1 Ground rod ~ See Note D1, Sheet 5 of 6.
- E2 Ground rod well (Ground tile) - 12" diameter concrete
- E3 Service ground electrode conduits.
- E4 Welded wire fabric ~ See Note D2, Sheet 5 of 6.
- E5 Utility entrance (service cabinet) or input power (transformer cabinet) conduit. Conduit shall terminate in the utility or high voltage section of the cabinet (as applicable).
- E6 Conduits to field equipment. Conduits shall terminate in the customer section (service cabinet) or low-voltage (transformer cabinet) of the cabinet.
- E7 Conduit couplers ~ See Note D5, Sheet 5 of 6.
- E8 4" (in.) diam. x 1/2" (in.) deep sump. Slope foundation within cabinet footprint toward sump.
- E9 Cabinet Well ~ See Note D9, Sheet 5 of 6.
- E10 3/8" (in.) diam. polyethylene or copper tubing for drain. Tubing shall be straight, but slope downward a minimum of 1" (in.)
- E11 Generator Tie-Down Anchor ~ See Note D10, Sheet 5 of 6.
- E12 Riser lip shall be 1" (in.) from the base edge of the largest cabinet to the face of the concrete riser. Smaller cabinets shall be positioned so that the front riser lip is 1" (in.) wide.
- E13 For a **Type B** (Wide) Pad, spacing between the cabinets shall match the widest door of the two adjacent cabinets. For **Type D** and **Type E** Service Cabinets, the clearance is to the face of the adjacent concrete riser (when present). See left and right clearance table this sheet.

WILLIAM FLINT JACKSON
STATE OF WASHINGTON
48821
REGISTERED
PROFESSIONAL ENGINEER

Jackson, Flint
Aug 24 2020 9:37 AM

CABINET ORIENTATION CONDUIT LAYOUT AND FOUNDATION DETAIL

STANDARD PLAN J-10.10-04

SHEET 6 OF 6 SHEETS

APPROVED FOR PUBLICATION
Date: 2020.09.16 10:10:28 -07'00'
STATE DESIGN ENGINEER
Washington State Department of Transportation

Provided to Builders Exchange of WA, Inc. For usage Conditions Agreement see www.bxwa.com - Always Verify Scal

DRAWN BY: FERN LIDDELL

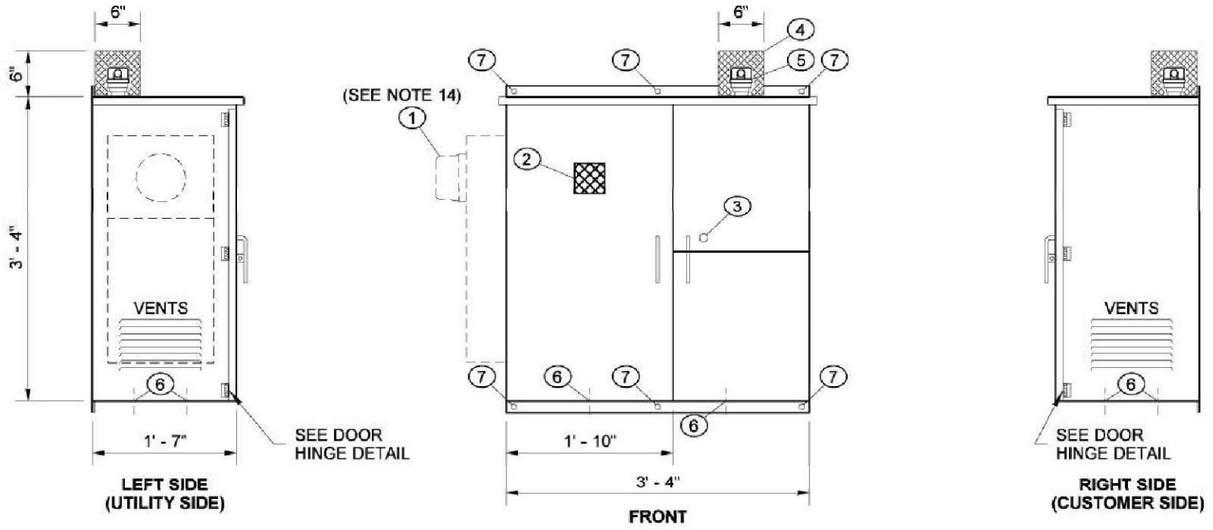

SERVICE CABINET DETAIL

KEY

1. METER SOCKET/BASE PANEL PER UTILITY REQUIREMENTS ~ UTILITY MAY REQUIRE METER TO BE INSTALLED ON THE OUTSIDE OF THE CABINET INSTEAD OF INSIDE THE UTILITY SIDE OF THE CABINET
2. UTILITY SIDE DOOR ~ HINGED FRONT FACING DOOR WITH 4" (IN) x 4" (IN) MINIMUM POLISHED SAFETY GLASS WINDOW
3. CUSTOMER SIDE DOOR WITH BEST CX 6-PIN LOCK CORE
4. PHOTOCELL ENCLOSURE ~ SEE PHOTOCELL MOUNTING DETAIL ~ ENCLOSURE SHALL BE FABRICATED FROM EITHER:
   A. 5/8" (IN) EXPANDED STEEL MESH WITH WELDED SEAMS AND MOUNTING FLANGES ~ HOT-DIP GALVANIZED AFTER FABRICATION ~ OR ~
   B. TYPE 5052 - H32 ALUMINUM WITH 5/8" (IN) x 5/8" (IN) OPENINGS EQUIVALENT TO 5/8" (IN) EXPANDED STEEL MESH
5. PHOTOELECTRIC CONTROL ~ SEE **STANDARD SPECIFICATION, SECTION 9-29.11(2).**
6. 1/4" (IN) DIAMETER DRAIN HOLE ~ DRILL BEFORE GALVANIZING
7. MOUNTING HOLE ~ SEE **STANDARD PLAN J-10.12** CABINET BRACKET MOUNTING DETAIL
8. HINGED DEAD FRONT WITH 1/4 TURN FASTENERS OR SLIDE LATCHES ~ DEAD FRONT PANEL BOLTS SHALL NOT EXTEND INTO VERTICAL LIMITS OF THE BREAKER ARRAY(S)
9. ARC FLASH AND SHOCK HAZARD LABEL (FIELD INSTALLED) ~ SEE DETAIL (SHEET 2)
10. CABINET BUSSWORK RATING LABEL
11. METAL WIRING DIAGRAM HOLDER

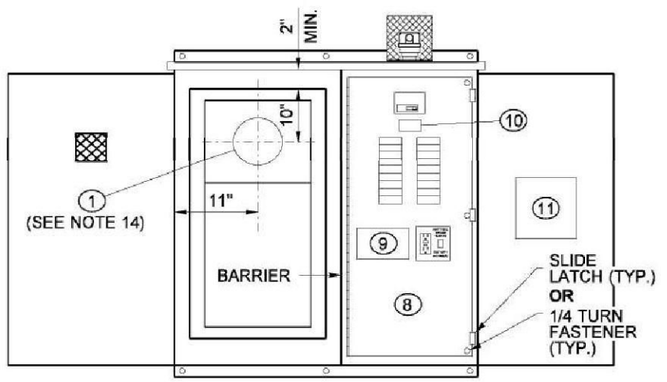

FRONT (SHOWN WITH DOORS OPEN AND DEAD FRONT CLOSED)

SERVICE CABINET INTERIOR

NOTES

1. See **Standard Specification Section 9-29.24** (Service Cabinets).
2. Cabinet shall be rated NEMA 3R and shall include two rain-tight vents.
3. Dimensions shown are minimum and shall be adjusted to accommodate the various sizes of equipment installed. A 1% tolerance is allowed for all dimensions.
4. Doors shall be pad-lockable and gasketed. Customer side door shall include a Best CX 6-pin Construction core lock. Each door shall use either a continuous piano hinge, three two-piece hinges, or two heavy-duty lift-off type hinges.
5. Hinges with pins shall have stainless steel or brass pins - see door hinge details. When using two piece hinge type on galvanized enclosure, remove hinge pin prior to welding hinge to cabinet and prior to hot-dip galvanizing. After galvanizing, replace pin with brass pin and solder in place.
6. Equipment identified by Key Numbers 14, 16, 17, 18, 19, 20, 21, 22, and 25 shall have an appropriately engraved phenolic name plate attached with screws or rivets. The name plate for Key Number 21 (Test Switch only) shall read as follows: "PHOTOCELL BYPASS TEST ON" AND "PHOTOCELL TEST OFF - AUTOMATIC." See service cabinet detail.
7. All busswork shall be **ASTM B187** copper and shall have a minimum rating of 250 amps. All breakers shall bolt on to the busswork. Jumpering of breakers shall not be allowed. Busswork shall accommodate all future equipment as shown in the Breaker Schedule.
8. All nuts, bolts, and washers used for mounting the photocell enclosure shall be stainless steel.
9. The photocell unit shall be centered in the photocell enclosure to permit 360 degree rotation of the photocell without removal of the photocell unit or the photocell enclosure.
10. All internal wire runs shall be identified with "TO - FROM" coded tags labeled with the code letters and/or numbers shown on the Schedules. Approved PVC or polyolefin wire marking sleeves shall be used.
11. See Contract for Breaker and Contactor Schedule.
12. Buss bars shall be sized to accommodate up to #4 AWG wires.
13. The meter base portion of this service was designed to meet metering portion of **EUSERC Drawing 309** requirements.
14. Metering arrangements vary with different serving Utilities. The Utility may require meter base mounting in the enclosure, on the side, or on the back of the enclosure. The Utility may require the dimension between the door and the front of the safety socket box to be less than the 11" (in) shown in the Left Side - Safety Socket Box Mounting Detail. The Contractor shall verify the serving Utility's requirements prior to fabrication and installation of the service equipment.
15. Verify the meter setback position with the utility and adjust the meter socket backplate to the required position. For cabinets with separate metering, remove the meter socket or install shunts in the meter socket.

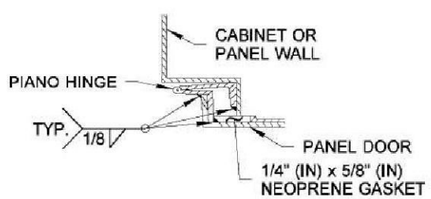

DOOR HINGE DETAIL

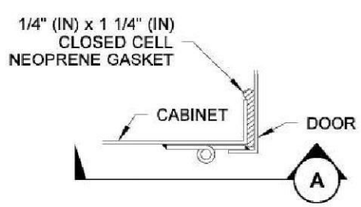

DOOR HINGE DETAIL
ALTERNATE TYPE B MODIFIED CABINET (SEE NOTE 5)

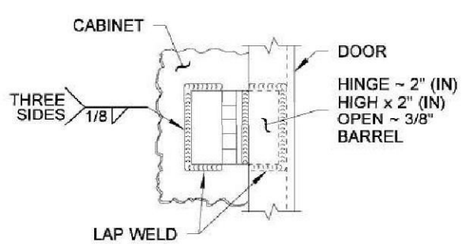

SECTION (A)

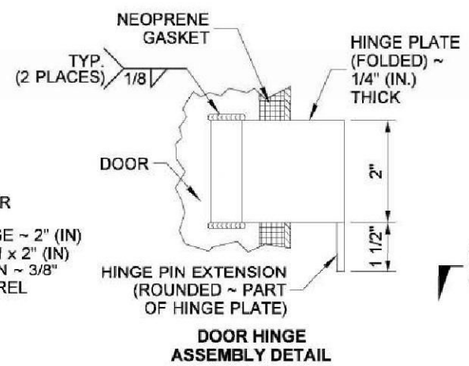

DOOR HINGE ASSEMBLY DETAIL

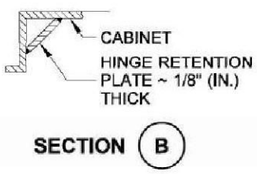

SECTION (B)

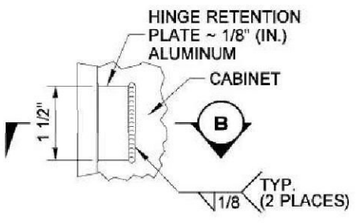

HINGE RETAINER DETAIL

DOOR HINGE DETAIL
HEAVY-DUTY (LIFT-OFF) TYPE



Aug 18, 2021

SERVICE CABINET TYPE B MODIFIED (0 - 200 AMP TYPE 120/240 VOLT SINGLE PHASE) STANDARD PLAN J-10.20-04

SHEET 1 OF 2 SHEETS

APPROVED FOR PUBLICATION
Aug 18, 2021
STATE DESIGN ENGINEER
Washington State Department of Transportation

Provided to Builders Exchange of WA, Inc. For usage Conditions Agreement see www.bxwa.com - Always Verify Scal

DRAWN BY: FERN LIDDELL

KEY (CONTINUED)

(12) ALUMINUM BACKPLATE FOR METER SOCKET/BASE

(13) 15" (IN) WIDE BY 36" (IN) TALL ALUMINUM BACKPLATE FOR CUSTOMER SIDE EQUIPMENT

(14) MAIN BREAKER ~ DPST ~ SIZE PER BREAKER SCHEDULE

(15) 18-CIRCUIT PANEL BOARD ~ MINIMUM SIZE WITH SEPARATE MAIN BREAKER

(16) 20 KA TYPE 1 OR TYPE 2 SURGE PROTECTION DEVICE ~ DIN RAIL MOUNT WITH PLUG-IN MODULE(S)

(17) DPST BRANCH BREAKER ~ SEE BREAKER SCHEDULE

(18) SPARE BRANCH BREAKER ~ 20 AMP DPST ~ OMIT IF BREAKER ARRAY IS FULL (SEE BREAKER SCHEDULE)

(19) SPST BRANCH BREAKER ~ SEE BREAKER SCHEDULE

(20) RECEPTACLE BREAKER ~ SPST 20 AMP

(21) PHOTOCELL BREAKER ~ SPST 15 AMP

(22) 2 GANG BOX WITH:
- A. RECEPTACLE (GROUNDED) ~ 125 VOLT 20 AMP GFCI
- B. TEST SWITCH ~ 120/277 VOLT 15 AMP SPDT SNAP ACTION - POSITIVE CLOSE - "T" RATED

BOX MAY INCLUDE A COVER PLATE, OR MAY BE COVERED BY DEAD FRONT PANEL ~ GANG BOX SHALL BE WIRED TO THE CABINET BONDING JUMBER (KEY NUMBER 24)

(23) ISOLATED NEUTRAL BUSS ~ 14 LUG COPPER (SEE NOTE 12)

(24) CABINET MAIN BONDING JUMPER ASSEMBLY ~ BUSS SHALL BE 14 LUG TINNED COPPER (SEE NOTE 12) ~ SEE CABINET MAIN BONDING JUMPER ASSEMBLY DETAIL

(25) CONTACTOR (BEHIND DEAD FRONT) ~ SEE BREAKER SCHEDULE

(26) THREE POSITION DIN RAIL MOUNTED TERMINAL BLOCK ~ TERMINAL BLOCK SECTIONS SHALL BE BLACK, WHITE, AND RED AS SHOWN IN CABINET WIRING DIAGRAM.

(27) CONNECTION TO GROUND ELECTRODE ~ SEE **STANDARD PLAN J-60.05**

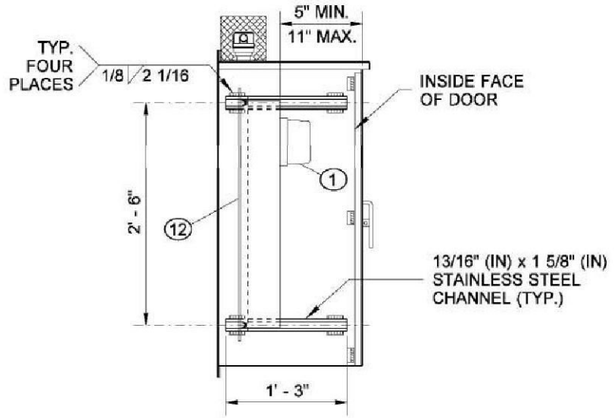

INTERIOR END VIEW UTILITY SIDE

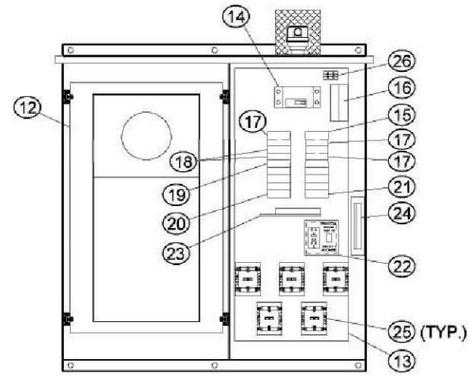

FRONT (SHOWN WITH DEAD FRONT REMOVED)

SERVICE CABINET INTERIOR DETAIL

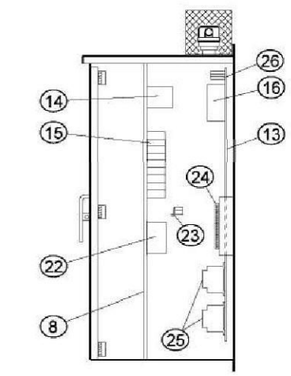

INTERIOR END VIEW CUSTOMER SIDE (SUPPORT FRAMES FOR EQUIPMENT NOT SHOWN)

⚠ WARNING

Arc Flash and Shock Hazard
Appropriate PPE Required

ARC FLASH PROTECTION		SHOCK PROTECTION	
Arc Flash Boundary (in)	00 In	Shock Hazard When Cover Removed	000 VAC
Incident Energy at 18 inches (cal/cm²)	0.00	Limited Approach	00 In
Assessment Date: 00-00-0000		Restricted Approach	00 In
By:		Glove Class	00
WSDOT Approval			
Inspector:	Date:		

ARC FLASH AND SHOCK HAZARD LABEL DETAIL
(9)

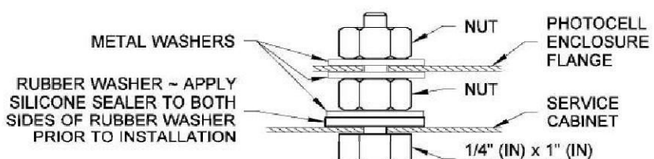

PHOTOCELL ENCLOSURE MOUNTING DETAIL

PHOTOCELL BYPASS TEST ON

TEST OFF / AUTOMATIC

TEST SWITCH LABEL DETAIL
(22)

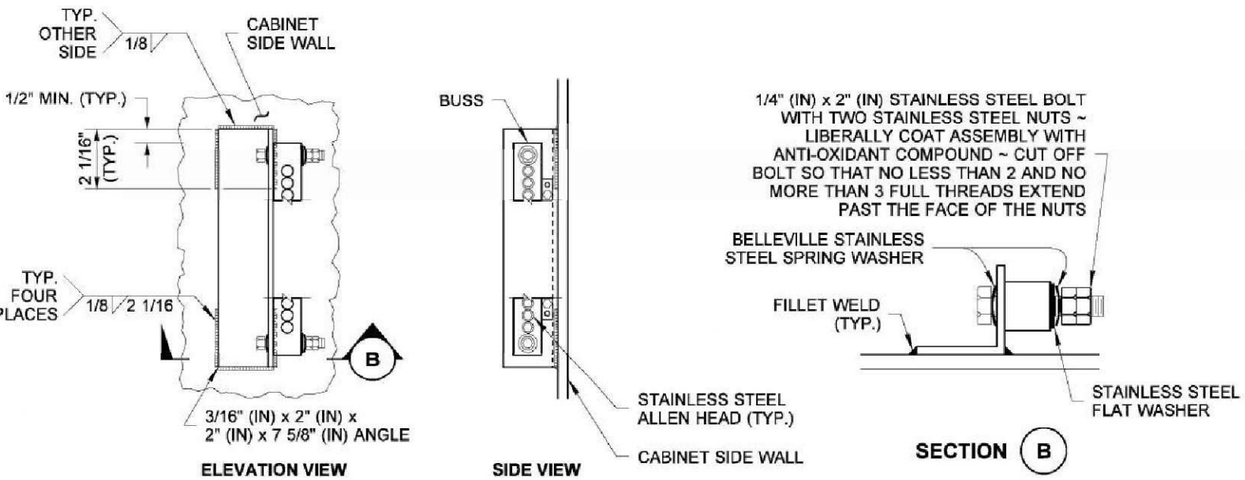

CABINET MAIN BONDING JUMPER ASSEMBLY DETAIL

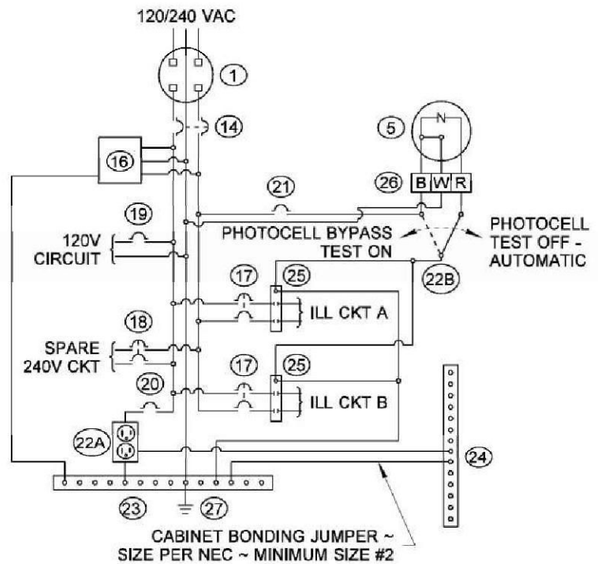

WIRING DIAGRAM

William Flint Jackson 8/18/21 10:00 PM

Aug 18, 2021

SERVICE CABINET TYPE B MODIFIED (0 - 200 AMP TYPE 120/240 VOLT SINGLE PHASE) STANDARD PLAN J-10.20-04

SHEET 2 OF 2 SHEETS

APPROVED FOR PUBLICATION

Aug 18, 2021

STATE DESIGN ENGINEER

Washington State Department of Transportation

Provided to Builders Exchange of WA, Inc. For usage Conditions Agreement see www.bxwa.com - Always Verify Scal

DRAWN BY: LISA CYFORD

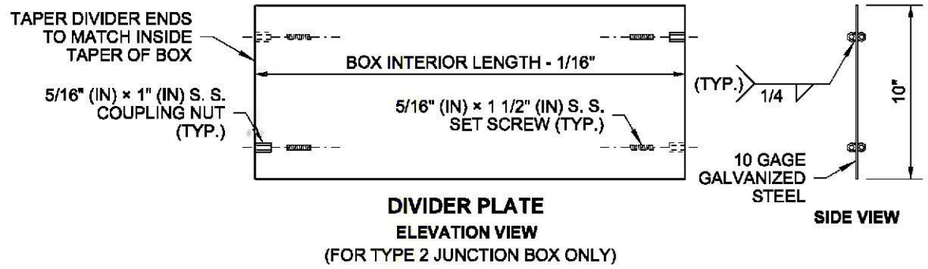

DIVIDER PLATE
ELEVATION VIEW
(FOR TYPE 2 JUNCTION BOX ONLY)

JUNCTION BOX DIMENSION TABLE

MARK	ITEM	BOX TYPE	
		TYPE 1	TYPE 2
A	OUTSIDE LENGTH OF JUNCTION BOX	22"	33"
B	OUTSIDE WIDTH OF JUNCTION BOX	17"	22 1/2"
C	INSIDE LENGTH OF JUNCTION BOX	18" ~ 19"	28" ~ 29"
D	INSIDE WIDTH OF JUNCTION BOX	13" ~ 14"	17" ~ 18"
E	LID LENGTH	17 5/8"	28 5/8"
F	LID WIDTH	12 5/8"	18 1/8"
	CAPACITY ~ CONDUIT DIAMETER	6"	12"

NOTES

1. All box dimensions are approximate. Exact configurations vary among manufacturers.
2. Minimum lid thickness shown. Junction Boxes installed in sidewalks, walkways, and shared-use paths shall have a slip-resistant coating on the lid and lip cover plate, and shall be installed with the surface flush with and matched to the grade of the sidewalk, walkway, or shared-use path. The non-slip lid shall be identified with permanent markings on the underside, indicating the type of surface treatment (see Contract Documents for details) and the year of manufacture. The permanent marking shall be 1/8" (in) line thickness formed with a mild steel weld bead and shall be placed prior to hot-dip galvanizing.
3. Lid support members shall be 3/16" (in) minimum thick steel C, L, or T shape, welded to the frame.
4. A 1/4-20 NC × 3/4" (in) stainless steel ground stud shall be welded to the bottom of the lid; include (2) stainless steel nuts and (2) stainless steel flat washers.
5. Bolts and nuts shall be liberally coated with anti-seize compound.
6. Equipment Bonding Jumper shall be # 8 AWG min. × 4' (ft) of tinned braided copper.
7. The System Identification letters shall be 1/8" (in) line thickness formed with a mild steel weld bead. See Cover Marking detail. Grind off diamond pattern before forming letters. For System Identification details, see **Standard Specification 9-29.2(4)**.
8. When required in the Contract, provide a 10" (in) x 27 1/2" (in), 10 gage divider plate, complete, with fasteners, in each Type 2 Junction Box where specified.
9. When required in Contract, provide a 12" (in) deep extension for each Type 2 Junction Box where specified.
10. See the **Standard Specifications** for alternative reinforcement and class of concrete.
11. Headed Anchor Shear Studs must be welded to the Steel Cover Lip Plate and wire tied in two places to the vertical Welded Wire Fabric when in contact with each other. Wire tie all other Headed Anchor Shear Studs to the horizontal Welded Wire Fabric.
12. Lid Bolt Down Attachment Tab provides a method of retrofitting by using a mechanical process in lieu of welding. Attachment Tab shown depicts a typical component arrangement; actual configurations of assembly will vary among manufacturers. See approved manufacturers' shop drawings for specifics.
13. Unless otherwise noted in the plans or approved by the Engineer, Junction Boxes, Cable Vaults, and Pull Boxes shall not be placed within the sidewalks, walkways, shared use paths, traveled ways or paved shoulders. All Junction Boxes, Cable Vaults, and Pull Boxes placed within the traveled way or paved shoulders shall be Heavy-Duty.
14. Distance between the top of the conduit and the bottom of the Junction Box lid shall be 6" (in) min. to 8" (in) max. for final grade of new construction only. See **Standard Specification 8-20.3(5)**. Where adjustments are to be made to existing Junction Boxes, or for interim construction stages during the contract, the limits shall be from 6" (in) min. to 10" (in) max. See **Standard Specification 8-20.3(6)**.

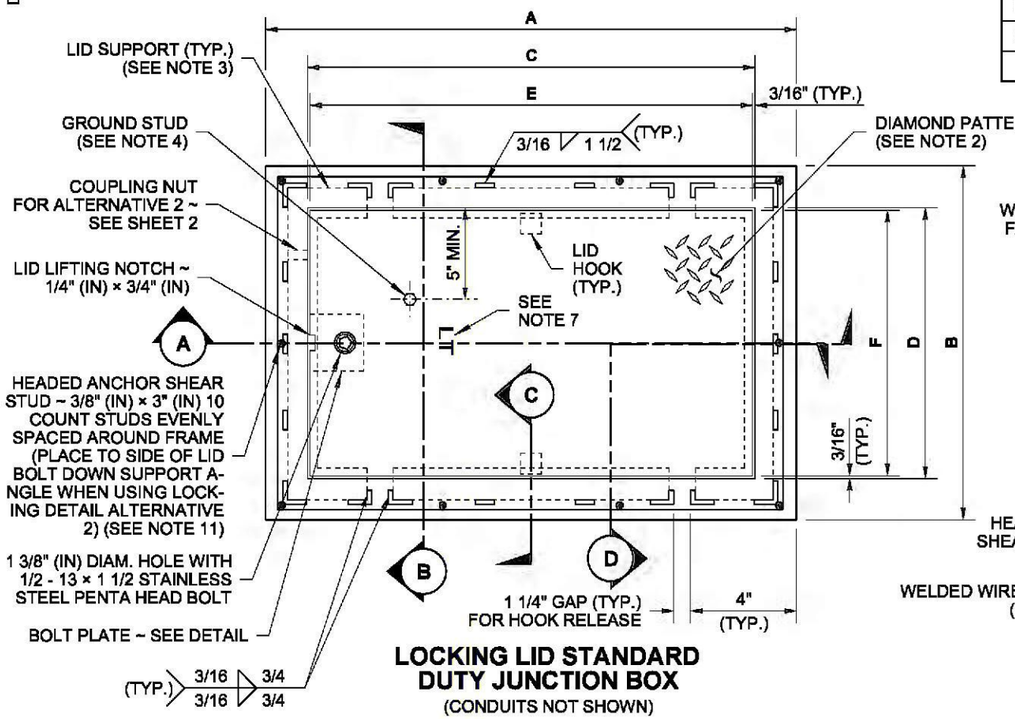

LOCKING LID STANDARD DUTY JUNCTION BOX
(CONDUITS NOT SHOWN)

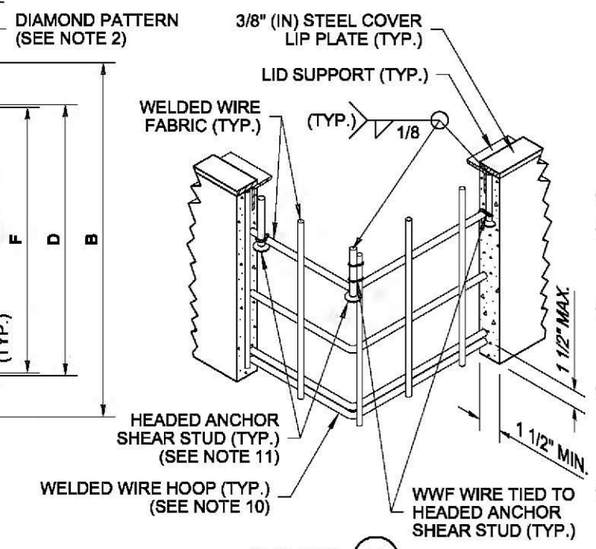

SECTION (D)
PERSPECTIVE VIEW

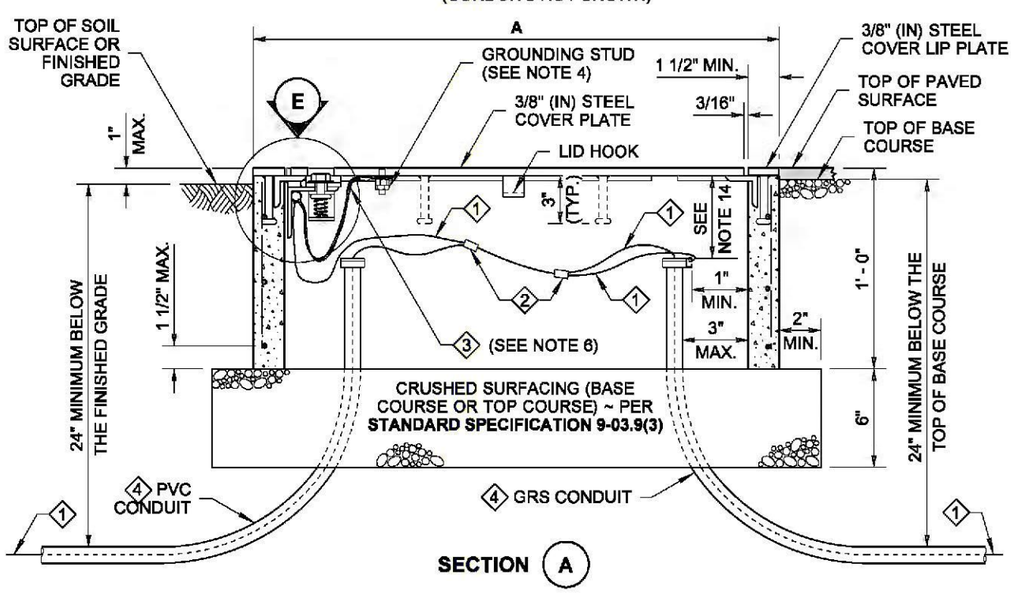

SECTION (A)

1. Equipment Grounding Conductor
2. Copper Solderless Crimp Connector
3. Equipment Bonding Jumper (See Note 6)
4. See Contract for conduit size and number

COVER MARKING DETAIL

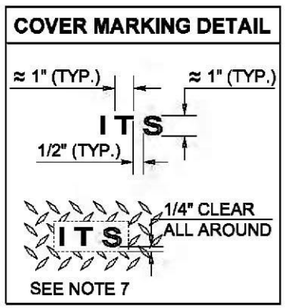

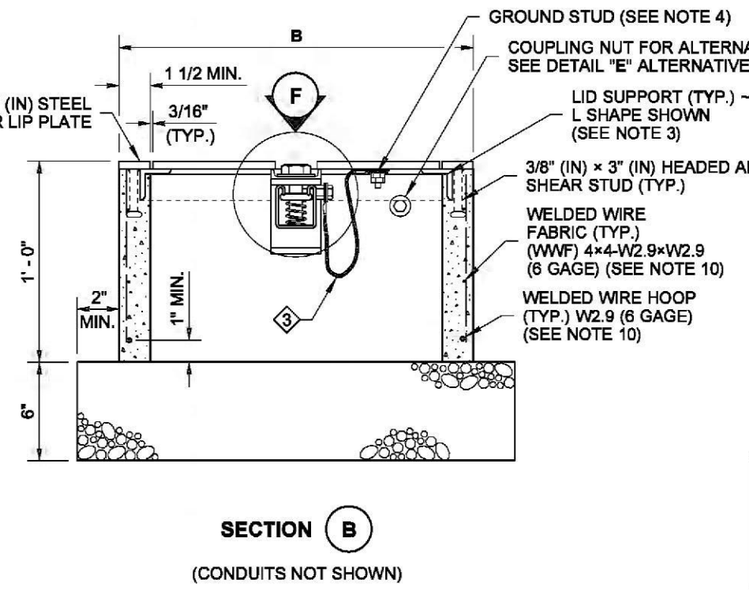

SECTION (B)
(CONDUITS NOT SHOWN)

THEODORE JOSEPH BAILEY
STATE OF WASHINGTON
39820
REGISTERED
PROFESSIONAL ENGINEER

Bailey, Ted
Apr 25 2016 9:32 AM
cosign

LOCKING LID STANDARD DUTY JUNCTION BOX TYPES 1 & 2
STANDARD PLAN J-40.10-04

SHEET 1 OF 2 SHEETS

APPROVED FOR PUBLICATION
Carpenter, Jeff
Apr 28 2016 3:12 PM
cosign
STATE DESIGN ENGINEER
Washington State Department of Transportation

Provided to Builders Exchange of WA, Inc. For usage Conditions Agreement see www.bxwa.com - Always Verify Scal

DRAWN BY: LISA CYFORD

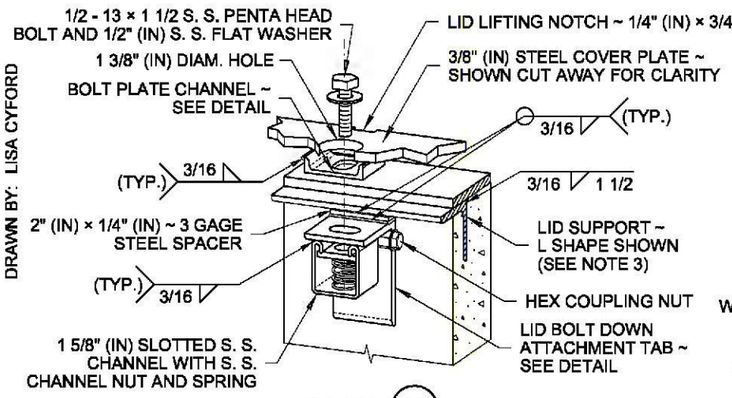

DETAIL (F)

ALTERNATIVE 1 SHOWN
PERSPECTIVE VIEW

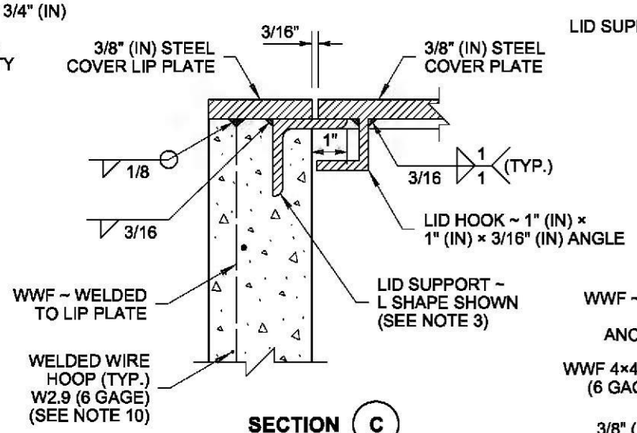

SECTION (C)

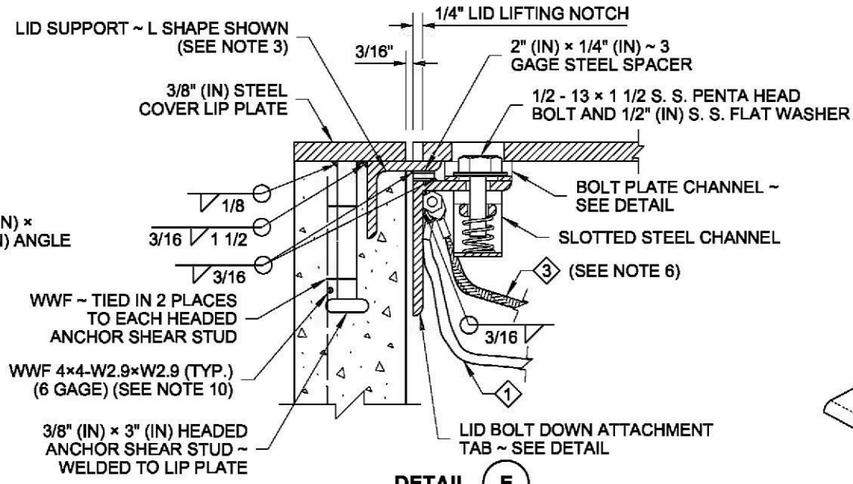

DETAIL (E)

ALTERNATIVE 1 SHOWN

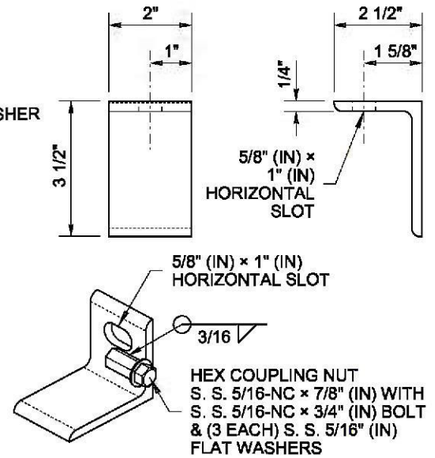

ALTERNATIVE 1
LID BOLT DOWN ATTACHMENT TAB
(SEE NOTE 12)

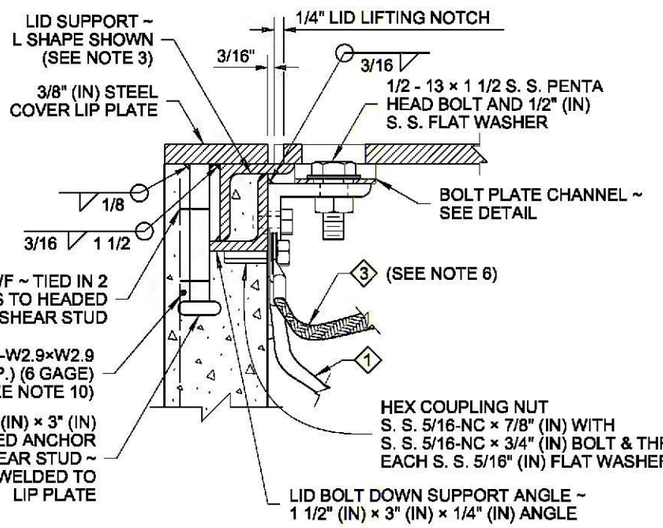

DETAIL (E)

ALTERNATIVE 2 SHOWN

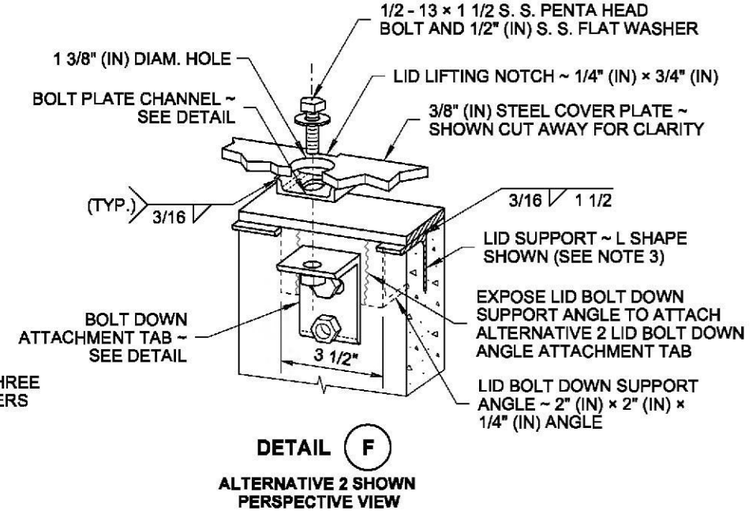

DETAIL (F)

ALTERNATIVE 2 SHOWN
PERSPECTIVE VIEW

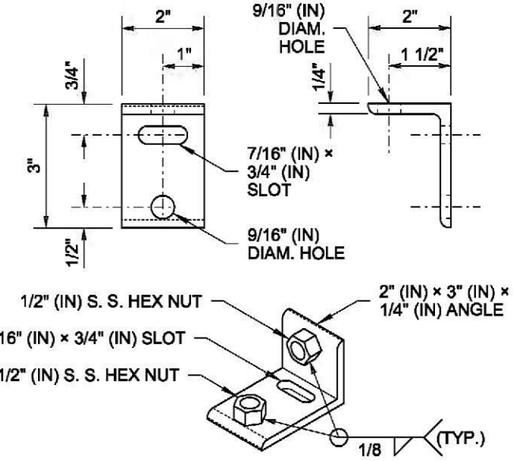

ALTERNATIVE 2
LID BOLT DOWN ATTACHMENT TAB
(SEE NOTE 12)

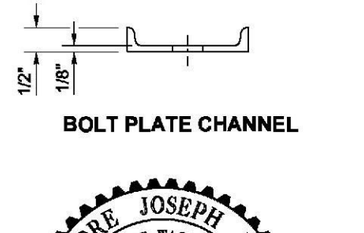

BOLT PLATE CHANNEL

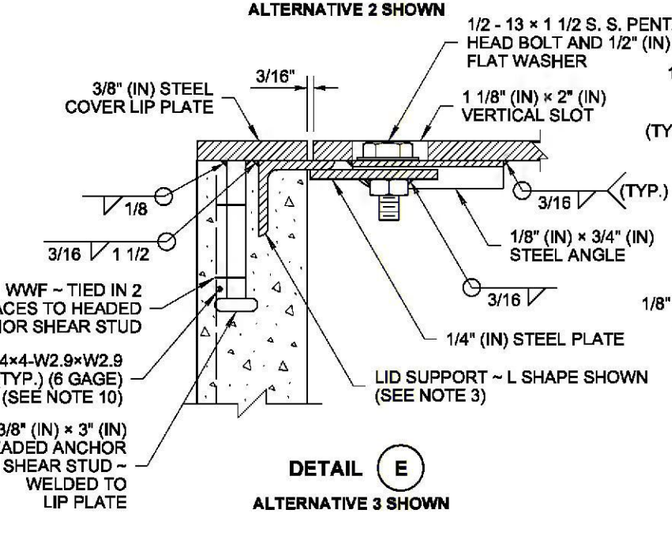

DETAIL (E)

ALTERNATIVE 3 SHOWN

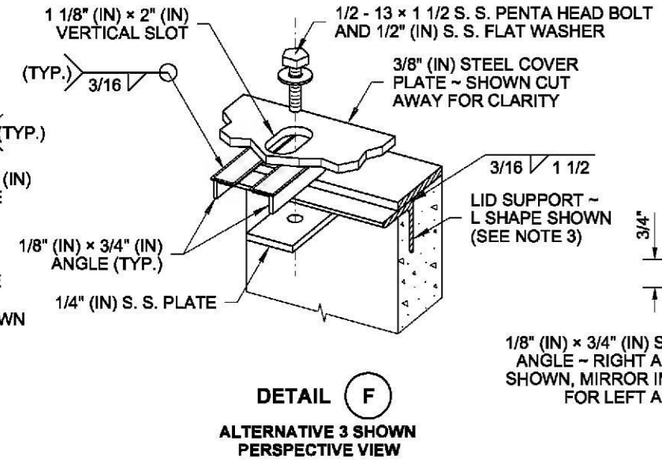

DETAIL (F)

ALTERNATIVE 3 SHOWN
PERSPECTIVE VIEW

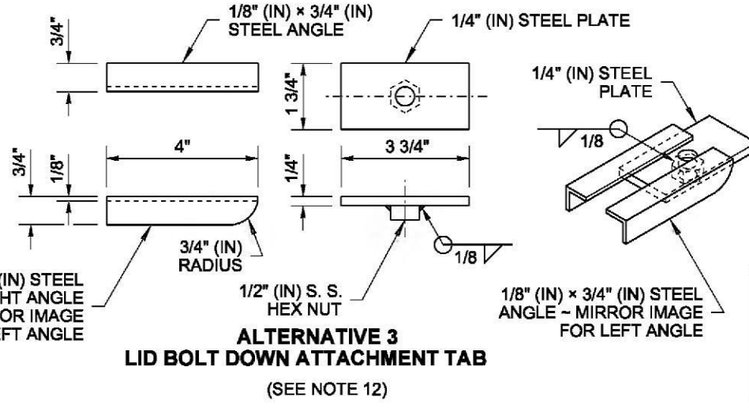

ALTERNATIVE 3
LID BOLT DOWN ATTACHMENT TAB
(SEE NOTE 12)

THEODORE JOSEPH BAILEY
STATE OF WASHINGTON
39820
REGISTERED
PROFESSIONAL ENGINEER

Bailey, Ted
Apr 25 2016 9:33 AM

LOCKING LID STANDARD DUTY JUNCTION BOX TYPES 1 & 2 STANDARD PLAN J-40.10-04

SHEET 2 OF 2 SHEETS

APPROVED FOR PUBLICATION
Carpenter, Jeff
Apr 28 2016 3:12 PM
STATE DESIGN ENGINEER
Washington State Department of Transportation

Provided to Builders Exchange of WA, Inc. For usage Conditions Agreement see www.bxwa.com - Always Verify Scal