City of Stanwood, Washington
Project Specifications and Provisions

271ST STREET NW TRAFFIC CALMING

City of Stanwood
Department of Public Works
10220 270th Street NW
Stanwood, Washington 98292

Provided to Builders Exchange of WA, Inc. For usage Conditions Agreement see www.bxwa.com - Always Verify Scal

CERTIFICATE OF ENGINEER

271ST STREET NW TRAFFIC CALMING

City of Stanwood

May 2025

These bidding and contract documents have been prepared by, or under the direction of, the following registered professional engineer[s], licensed in accordance with the laws of the State of Washington to practice in the State of Washington:

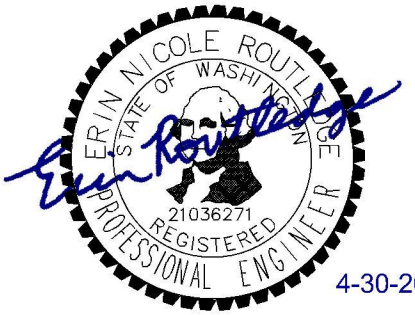

Erin Routledge

Digitally signed by Erin Routledge
DN: C=US, E=Erin.Routledge@Perteet.com, O=Perteet, OU=Perteet, CN=Erin Routledge
Date: 2025.04.30 09:02:14-07'00'

4-30-2025

Erin Routledge, PE

Approved for Construction:

Kevin Hushagen

Kevin Hushagen
Public Works Director

Provided to Builders Exchange of WA, Inc. For usage Conditions Agreement see www.bxwa.com - Always Verify Scal

ADVERTISEMENT FOR BIDS
271st Street NW Traffic Calming

Opening: May 22, 2025

City of Stanwood

Sealed bids will be received by the Public Works Director at **Stanwood City Hall**, 10220 270th Street NW, Stanwood, Washington 98292, until 2:00 PM, May 22, 2025, and not later, and will then and there be opened and publicly read at that time for the construction of the following improvements:

> The 271st Street NW Traffic Calming project consists of improving the intersection of the intersection of 271st Street NW and 88th Avenue NW with new curb bulbouts, new paver block and cement concrete sidewalks, new roadway pavements, new crosswalks, stormwater pipes and stormwater structures, curb ramps, and channelization, and improving the mid-block crossing of 271st Street NW with new curb bulbouts, curb ramps, RRFB system, and overhead string lighting.

The Engineer's estimate for this project ranges between $1,080,000 to $1,320,000. The project's Physical Completion Date shall be within 40 working days of the Notice to Proceed, subject to Special Provision section 1-08.4.

Free-of-charge access to project bid documents (plans, specifications, addenda, and bidders list) is provided to Prime Bidders, Subcontractors, and Vendors by going to http://www.bxwa.com and clicking on "Posted Projects," "Public Works," and "City of Stanwood." This online plan room provides Bidders with fully usable online documents with the ability to: download, view, print, order full/partial plan sets from numerous reprographic sources, and a free online digitizer/take-off tool. It is recommended that Bidders "Register" in order to receive automatic email notification of future addenda and to place themselves on the "Self-Registered Bidders List." Bidders that do not register will not be automatically notified of addenda and will need to periodically check the on-line plan room for addenda issued on this project. Contact Builders Exchange of Washington at 425-258-1303 should you require assistance with access or registration.

Project Bid documents (Plans, Specifications, and Addenda) will also be available on the City of Stanwood's website by going to http://www.stanwoodwa.org and checking on "Bid Opportunities", under "Doing Business."

A pre-bid conference will not be held for this Project.

All bids shall be submitted on the prescribed Bid Forms and in the manner as stated in this advertisement and in the Project Manual and said bids shall be accompanied by a bid deposit in the form of a cashier's check, postal money order, or surety bond to the City of Stanwood in the amount of five percent (5%) of the total amount of the bid. If a surety bond is used, said bond shall be issued by a surety authorized and registered to issue said bonds in the State of Washington. The bond shall specify the surety's name, address, contact and phone number, and shall include a power of attorney appointing the signatory of the bond as the person authorized to execute it. Should the successful bidder fail to enter into the Contract and furnish

Provided to Builders Exchange of WA, Inc. For usage Conditions Agreement see www.bxwa.com - Always Verify Scal

satisfactory performance bond within the time stated in the Information for Bidders, the bid deposit shall be forfeited to the City of Stanwood. Faxed bids and/or surety bonds will not be accepted.

Minority and women owned businesses shall be afforded full opportunity to submit bids in response to this invitation, shall not be discriminated against on the grounds of gender, race, color, age, national origin or handicap in consideration of an award of any contract or subcontract, and shall be actively solicited for participation in this project by direct mailing of the invitation to bid to such businesses as have contacted the City for such notification. Further, all bidders are directed to solicit and consider minority and women owned businesses as potential subcontractors and material suppliers for this project.

The City of Stanwood reserves the right to accept the bid that is in the best interest of the City, to postpone the acceptance of bids and the award of the Contract for a period not to exceed sixty (60) days, or to reject any and all bids received. Subject to the foregoing, the bid may be awarded to the lowest responsible bidder. When awarded the Contract, the successful bidder shall promptly execute the Contract and shall furnish a bond of faithful performance of the Contract in the full amount of the Contract price.

Bids must be submitted in a sealed envelope with the outside clearly marked with the bid opening date, bid opening time, and the project name as it appears in this advertisement and the name and address of the bidder. Bids shall be addressed to the Public Works Director, City of Stanwood, 10220 270th St NW, Stanwood, Washington 98292.

Questions or comments regarding this project shall be submitted in writing to Alan Lytton, City of Stanwood, via email (Alan.Lytton@ci.stanwood.wa.us). Questions via phone will not be accepted. Bidders shall submit questions no later than 2:00 p.m. Tuesday, May 20, 2025. Questions or comments will not be acknowledged after this time and date.

Kevin Hushagen
Public Works Director

Publish:
First Publication: Everett Herald, Daily Journal of Commerce: May 1, 2025
Second Publication: Everett Herald: May 8, 2025

Provided to Builders Exchange of WA, Inc. For usage Conditions Agreement see www.bxwa.com - Always Verify Scal

CITY OF STANWOOD
271st Street NW Traffic Calming

TABLE OF CONTENTS

Advertisement for Bids

PART I BIDDING REQUIREMENTS

Instructions to Bidders
Bidder's Checklist
Non-Collusion Affidavit
Bidder's Construction Experience
Subcontractor List
Bid Proposal
Contractor Certification Wage
Bid Bond

PART II CONTRACT FORMS SUBMITTED FOLLOWING AWARD OF CONTRACT

Contract
Performance and Payment Bond
Escrow Agreement for Retained Percentage
Certificate of Insurance (Provided by Bidder)

PART III STANDARD SPECIFICATIONS

PART IV SPECIAL PROVISIONS

PART V APPENDICES

A. Prevailing Wage Rates
B. In-Roadway Warning Light Details
C. Standard Plans

Provided to Builders Exchange of WA, Inc. For usage Conditions Agreement see www.bxwa.com - Always Verify Scal

PART I

BIDDING REQUIREMENTS

Provided to Builders Exchange of WA, Inc. For usage Conditions Agreement see www.bxwa.com - Always Verify Scal

INSTRUCTIONS TO BIDDERS

Bidders shall satisfy themselves by personal examination of Plans, Specifications, and site of the proposed improvements, and by any other examination and investigation that they may desire to make as to the accuracy of the estimate of quantities, the nature of the work, and the difficulties to be encountered.

Bids shall be submitted upon the Proposal form that is bound to these Specifications. The Contractor shall submit the Bid Proposal Form, Bid Bond, and Non-collusion Affidavit, Bidders Contractor Experience Form, Subcontractor list, Contractor Certification Wage, in a sealed package, addressed to the City, and plainly marked "271st Street NW Traffic Calming." Bids shall be delivered, opened, and read publicly and City of Stanwood City Hall

A Proposal will be considered irregular and will be rejected if the Proposal Form furnished by the City is not used or is altered, or if the completed Proposal Form contains any unauthorized additions, deletions, alternate Bids or conditions. No oral or telephonic proposals or modifications will be considered.

Each Proposal will be accompanied by a certified check, cashier's check, postal money order, or Proposal guaranty bond, as required by RCW 47, made payable without reservations to the City, or in the case of special districts, the County Treasurer, in amount not less than five percent (5%) of the total Bid for all Schedules. Said check or bond will be held as a guaranty that the successful Bidder will, within ten (10) days from the date of notification of award, enter into a Contract and furnish an approved Performance Bond, on form attached, in an amount equal to one hundred percent (100%) of the amount of the Contract, including state sales tax.

As soon as the bid prices have been compared, the City will return the good faith token accompanying such of the Proposals, as in the City's judgment, would not be considered in making award. All other Proposal guarantees will be held until the Contract and the Bond of the successful Bidder have been executed, after which they shall be returned to the Bidders whose Proposals they accompanied.

A Contract will not be awarded until the City is satisfied that the successful Bidder is reasonably familiar with this class of work and has the necessary capital and tools to satisfactorily perform the same. The right is specifically reserved by the City to reject any or all Proposals, to accept the proposal of the lowest responsible bidder, or to re- advertise for new proposals.

The Bidder's attention is hereby directed to that portion of the Proposal that requires that the Bidder furnish information concerning their experience with work of a similar nature, equipment to be used on this Project, and general background information. Information that is incomplete, evasive, or of a general nature only shall be considered as grounds for rejection of the Bid.

Refer to Section 1-02.1 of the Special Provisions

After the date and hour set for the opening of the Bids, no Bidder may withdraw their Proposal unless the award of the Contract is delayed for a period exceeding ninety (90) days.

In the event the successful Bidder fails to furnish an approved Performance Bond, execute the Contract, and comply with all other pertinent legal requirements within ten (10) days after

Provided to Builders Exchange of WA, Inc. For usage Conditions Agreement see www.bxwa.com - Always Verify Scal

notification by the City of the award of Contract, the certified check, bank draft, or money order accompanying the Bid shall be forfeited in the amount lost by the City in making the award to the next low, responsible Bidder, but said forfeiture not to exceed five percent (5%) of the amount bid by the Contractor failing or refusing to comply with the award requirements. In the event the bid bond is tendered as a "Good Faith" token, and the awardee fails or refuses to comply with the requirements of entering a Contract on the basis of their Proposal, said Contractor and their Surety shall be likewise held liable under the Bid Bond in an amount not to exceed five percent (5%) of their Bid for losses suffered by the City in being forced to award to the new low, responsible Bidder.

No consideration will be given by the City to a claim of error in a Proposal, unless such claim is made to the City within two (2) hours after the time stated in the advertisement for receiving proposals, and unless supporting evidence of such claim, including cost breakdown sheets, is delivered to the City within three (3) hours after the time stated in the advertisements for receiving Proposals.

Bidders are expected to familiarize themselves and comply with all statutes, regulations, and ordinances that relate to their proposed work and that deal with the prevention of environmental pollution and the preservation of natural resources, including but not limited to the National Environmental Policy Act of 1969, PL 911-190, Executive Order 11514, and the State Environmental Policy Act of 1971, RCW 43.21C.

The Owner may waive any informalities or minor defects or reject any and all bids. Any bid may be withdrawn prior to the scheduled time for the opening of bids or authorized postponement thereof. Any bid received after the time and date specified shall not be considered. No bidder will be permitted to withdraw its bid between the closing time for receipt of bids and execution of the Contract, unless the award is delayed for a period exceeding sixty (60) calendar days. A conditional or qualified bid will not be accepted.

The City of Stanwood reserves the right to accept the bid that is in the best interest of the City, to postpone the acceptance of bids and the award of the Contract for a period not to exceed sixty (60) days, or to reject any and all bids. If all bids are rejected, the City may elect to re-advertise for bids. Subject to the foregoing, the contract may be awarded to the lowest responsible bidder.

The work will begin within five (5) working days after notice to proceed from the Public Works Director and shall be completed within the time as stated in the Advertisement for Bids.

The Owner may make such investigations as it deems necessary to determine the ability of the bidder to perform the work, and the bidder shall furnish to the Owner all such information and data for this purpose as the Owner may request. The Owner reserves the right to reject any bid, if the evidence submitted by, or investigation of, such bidder fails to satisfy the Owner that such bidder is properly qualified to carry out the obligations of the Contract and to complete the work contemplated therein. Subject to the foregoing, the bid award may be made to the lowest responsible bidder.

The party to whom the Contract is awarded will be required to execute the Contract and obtain the Performance and Payment Bond within ten (10) calendar days from the date the notice of award is delivered to the bidder. Such bond(s) shall be on the form provided by the Owner, specify the name, contact phone, and address of the surety, and shall include a power of attorney appointing the signatory of the bond(s) as the person authorized to execute it (them).

Provided to Builders Exchange of WA, Inc. For usage Conditions Agreement see www.bxwa.com - Always Verify Scal

BIDDER'S CHECKLIST

The following forms must be executed in full and submitted with the Bid Proposal:

1. Has the Bid Security Transmittal form been completed, either by (1) attaching a bid deposit in the form of a postal money order, cashier's check or other security and filling out the part of the form above the words "Bid Bond" or (2) a surety bond in the proper form and filling out the section of the form below the words "Bid Bond"?

2. Is the amount of the bid deposit at least five percent (5%) of the total amount of the bid?

3. Have the bid forms been properly signed?

4. Have you bid on all items?

5. If Addendum(a) have been issued, have it/they been acknowledged on the Bid Form?

6. Has the *non-collusion affidavit* been properly executed?

7. Have you shown your contractor's state license number on the Bid Form?

8. Have you listed all proposed subcontractors that you will use for the project on the Listing of Proposed Subcontractors form?

9. Have you filled out the Bidder's Construction Experience form?

10. Have you signed the **Statement of Intent to Pay Prevailing Wages**? (To be executed by the successful Bidder)

The following forms are to be executed after the Contract is awarded:

A. Contract - To be executed by the successful bidder and the City.

B. Performance and Payment Bond - To be executed on the form provided by Owner, by the successful bidder and its surety company. To include name, contact and phone number, and address of surety and power of attorney of signatory.

C. Insurance certificate(s).

Provided to Builders Exchange of WA, Inc. For usage Conditions Agreement see www.bxwa.com - Always Verify Scal

NON-COLLUSION AFFIDAVIT

STATE OF WASHINGTON

COUNTY OF_____)

The undersigned, being first duly sworn on oath, says that the bid herewith submitted is a genuine and not a sham or collusive bid, or made in the interest or on behalf of any person not therein named; and (s)he further says that the said bidder has not directly or indirectly induced or solicited any bidder on the above work or supplies to put in a sham bid, or any other person or corporation to refrain from bidding, and that said bidder has not in any manner sought by collusion to secure to him/herself an advantage over any other bidder or bidders.

_____
Signature of Bidder/Contractor

Subscribed and sworn to before me this day of_____, 2025.

Notary Public in and for the State of Washington.

Residing at _____

My Comm. Exp.:_____

Title:_____

Provided to Builders Exchange of WA, Inc. For usage Conditions Agreement see www.bxwa.com - Always Verify Scal

BIDDER'S CONSTRUCTION EXPERIENCE

Answer all questions and provide clear and comprehensive information.

1. Name of bidder: _____
   Registration Number: _____
2. Permanent main office address: _____
3. When organized: _____
4. Where incorporated: _____
5. How many years have you been engaged in the contracting business under your present firm name? _____
6. * Contracts on hand. (Schedule these, showing gross amount of each contract and the approximate anticipated dates of completion), contact name and phone number.

   _____

   _____

7. General character of work performed by your company:

   _____

8. Have you ever failed to complete any work awarded to you? If so, where, and why?

   _____

   _____

   _____

   _____

9. Have you ever defaulted on a contract? _____

10. List of three (3) major projects of similar nature which have been completed by the Contractor within the last three (3) years, the gross dollar amount and brief description ofeach project:

    1. Project Name: _____

       Amount: _____

       Owner: _____

       Engineer's Name: _____

       Engineer's Phone: _____

       Description

       _____

       _____

Provided to Builders Exchange of WA, Inc. For usage Conditions Agreement see www.bxwa.com - Always Verify Scal

2. Project Name: _____

   Amount: _____

   Owner: _____

   Engineer's Name: _____

   Engineer's Phone: _____

   Description

   _____

   _____

3. Project Name: _____

   Amount: _____

   Owner: _____

   Engineer's Name: _____

   Engineer's Phone: _____

   Description

   _____

   _____

11. List your major equipment available for this contract:

    _____

    _____

    _____

12. Will you, upon request, fill out a detailed financial statement and furnish any otherinformation that may be required by the City?

* Add separate sheets if necessary.

The undersigned hereby authorizes and requests any person, firm or corporation to furnishany information requested by the City of Stanwood.

Date:_____Bidder's Signature: _____

Provided to Builders Exchange of WA, Inc. For usage Conditions Agreement see www.bxwa.com - Always Verify Scal

SUBCONTRACTOR LIST

Prepared in compliance with RCW 39.30.060 as amended

To Be Submitted with the Bid Proposal

Project Name: **271st Street NW Traffic Calming**

Failure to list subcontractors who are proposed to perform the work of heating, ventilation and air conditioning, plumbing, as described in Chapter 18.106 RCW, and electrical as described in Chapter 19.28 RCW will result in your bid being non-responsive and therefore void.

Subcontractor(s) that are proposed to perform the work of heating, ventilation and air conditioning, plumbing, as described in Chapter 18.106 RCW, and electrical as described in Chapter 19.28 RCW must be listed below. The work to be performed is to be listed below the subcontractor(s) name.

If no subcontractor is listed below, the bidder acknowledges that it does not intend to use any subcontractor to perform those items of work.

Subcontractor Name: _____

Work to be Performed: _____

Subcontractor Name: _____

Work to be Performed: _____

Subcontractor Name: _____

Work to be Performed _____

Subcontractor Name: _____

Work to be Performed _____

Subcontractor Name: _____

Work to be Performed _____

Provided to Builders Exchange of WA, Inc. For usage Conditions Agreement see www.bxwa.com - Always Verify Scal

BID Proposal

To the Honorable Mayor and Council Stanwood, Washington

BUSINESS NAME:_____

BUSINESS LICENSE NUMBER _____

UBI NUMBER _____

EMPLOYEE SECURITY DEPARTMENT NUMBER: _____

271st Street NW Traffic Calming

The undersigned has examined the site, General Stipulations, Engineering Specifications, Contract Drawings, laws, and ordinances covering the improvements contemplated. In accordance with the terms, provisions, and requirements of each of the foregoing, their respective terms and conditions are incorporated herein by this reference, and the following lump sums and unit prices are tendered as an offer to perform the work and furnish the equipment, materials, appurtenances, and guarantees, where required, complete in place and in good working order.

As evidence of good faith, cash, bid bond, cashier's check, or certified check made payable to the City Treasurer, City of Stanwood, isattached hereto. The undersigned understands and hereby agrees that, should this offer be accepted, and the undersigned fail or refuse to enter into a contract and furnish the required construction performance bond and necessary liability insurance, the undersigned will forfeit to the City an amount for the "good faith token" equal to five percent (5%) of the amount bid as liquidated damages, all as provided for in the Specifications.

The undersigned fully understands and agrees that the unit prices here submitted shall apply to the quantity actually used, regardlessof its relation to the quantity shown in the Proposal.

The undersigned freely states that he/she is familiar with the provisions of the Competitive Bidding Statutes of Washington State, specifically the provisions of RCW Chapter 9.18, and certifies that with respect to this Proposal, there has been no collusion or understanding with any other person, persons, or corporation to prevent or eliminate full and unrestricted competition upon Bidders onthis public works project.

_____ _____

Signature of Contractor's Representative Date

Provided to Builders Exchange of WA, Inc. For usage Conditions Agreement see www.bxwa.com - Always Verify Scal

Contractor

If the bidder is awarded a construction contract on this bid, the name and address of the surety who will providethe performance bond is:

Surety	Agent
Surety address	Agent Address
Surety Contact and Phone Number	Agent Contact and Phone Number

Provided to Builders Exchange of WA, Inc. For usage Conditions Agreement see www.bxwa.com - Always Verify Scal

BID SCHEDULE
271st Street NW Traffic Calming

ITEM NO	SPEC SECTION	ITEM DESCRIPTION	EST. QTY.	UNIT	UNIT PRICE	AMOUNT
1	1-04.4 SP	Minor Change	1	EST	$15,000	$15,000
2	1-05.4 SP	Roadway Surveying	1	LS		
3	1-05.18 SP	Record Drawings (Minimum Bid $1,000)	1	LS		
4	1-07.17 SP	Potholing	10	EA		
5	1-09.7 SP	Mobilization	1	LS		
6	1-10 SP	Project Temporary Traffic Control	1	LS		
7	2-01	Clearing and Grubbing	1	LS		
8	2-02 SP	Removing Cement Conc. Curb and Gutter	490	LF		
9	2-02 SP	Removing Cement Conc. Sidewalk	372	SY		
10	2-02 SP	Sawcutting Existing Pavement	1,316	LF		
11	2-02 SP	Removing Existing Drainage Pipe	201	LF		
12	2-02 SP	Removing Existing Drainage Structure	2	EA		
13	2-03	Gravel Borrow Incl. Haul	190	TON		
14	2-03	Roadway Excavation Incl. Haul	510	CY		
15	2-09	Structure Excavation Cl. B Incl. Haul	140	CY		
16	2-09	Shoring or Extra Excavation Cl. B	1,236	SF		
17	2-10 SP	Triaxial Geogrid Reinforcement for Subgrade	236	SY		
18	2-12	Construction Geotextile for Separation	623	SY		
19	4-04	Crushed Surfacing Top Course	370	TON		
20	5-04 SP	HMA CL. 1/2" PG 58H-22	650	TON		
21	5-04 SP	Planning Bituminous Pavement	3,347	SY		
22	7-04	Solid Wall PVC Storm Sewer Pipe 8 In. Diam	286	LF		

Provided to Builders Exchange of WA, Inc. For usage Conditions Agreement see www.bxwa.com - Always Verify Scal

23	7-05	Catch Basin Type 1	7	EA		
24	7-05	Catch Basin Type 2 – 48 In. Diam.	3	EA		
25	7-05	Connection to Drainage Structure	6	EA		
26	7-05 SP	Adjust Catch Basin	8	EA		
27	7-05 SP	Adjust Manhole	1	EA		
28	7-05 SP	Replace Existing Rectangular Frame and Grate with New Rectangular Frame and Solid Metal Cover	3	EA		
29	7-09	Bank Run Gravel for Trench Backfill	65	CY		
30	7-12 SP	Adjust Water Valve Box to Grade	4	EA		
31	7-12 SP	Adjust Water Meter Box to Grade	2	EA		
32	7-14 SP	Resetting Existing Hydrant	1	EA		
33	8-01	Inlet Protection	11	EA		
34	8-01 SP	Erosion Control and Water Pollution Prevention	1	LS		
35	8-02 SP	Property Restoration	1	EST	$2,500	$2,500
36	8-04	Cement Conc. Pedestrian Curb	44	LF		
37	8-04 SP	Cement Conc. Traffic Curb and Gutter – 4 In. Height	555	LF		
38	8-04 SP	Cement Conc. Traffic Curb – 4 In. Height	137	LF		
39	8-04 SP	Cement Conc. Banding	372	LF		
40	8-06	Cement Conc. Driveway Entrance Type Drop Curb	122	SY		
41	8-14 SP	Cement Conc. Sidewalk	65	SY		
42	8-14 SP	Cement Conc. Curb Ramp Type Perpendicular	100	SY		
43	8-19 SP	Concrete Unit Paver – Crosswalk (3-1/8")	1,372	SF		
44	8-19 SP	Concrete Unit Paver – Sidewalk (2-3/8")	4,126	SF		
45	8-20 SP	Illumination System - Complete	1	LS		
46	8-20 SP	Rectangular Rapid Flashing Beacon – Mid-Block	1	LS		

Provided to Builders Exchange of WA, Inc. For usage Conditions Agreement see www.bxwa.com - Always Verify Scal

47	8-21	Permanent Signing	1	LS		
48	8-22	Removing Plastic Line	83	LF		
49	8-22	Plastic Line	1,440	LF		
50	8-22	Paint Line	1,447	LF		
51	8-22	Plastic Wide Line	53	LF		
52	8-22	Plastic Stop Line	60	LF		
53	8-22	Plastic Crosswalk Line	176	SF		
54	8-22	Plastic Traffic Arrow	2	EA		
55	8-22	Plastic Access Parking Space Symbol	2	EA		
					Subtotal Computed Price	**$**
					Washington State Sales Tax 9.3%	**NA**
					Total Computed Price	**$**

Signature of Contractor's Representative

Date

Provided to Builders Exchange of WA, Inc. For usage Conditions Agreement see www.bxwa.com - Always Verify Scal

ADDENDA RECEIVED

The bidder hereby acknowledges that it has received Addenda Number(s): _____ to this Project Manual, Drawings, or other related contract and/or project documents. The name of the bidder submitting this bid and its business phone number and address, to which address all communications concerned with this bid and with the Contract shall be sent, are listed below.

Bidder's firm name:

_____

Complete address:

_____

Telephone No.: _____

Signed by:_____ Title: _____

Printed Name: _____

Notes:

(1) If the bidder is a partnership, so state, giving firm name under which business is transacted.
(2) If the bidder is a corporation, this bid must be executed by its duly authorized officials.

Provided to Builders Exchange of WA, Inc. For usage Conditions Agreement see www.bxwa.com - Always Verify Scal

CERTIFICATION OF COMPLIANCE WITH WAGE PAYMENT STATUTES FORM

Effective July 23, 2017, and updated in July 2019, before award of a public works contract, the bidder under consideration for award of a public works project must submit to the public agency a sworn statement that they have not willfully violated wage payment laws within the past three years in order to be considered a responsible bidder. (See RCW 39.04.350 as modified by SSB 5301, Laws of 2017, ch. 258; modified in July 2019 by SSB 5017 regarding unsworn declarations.)

CERTIFICATE OF COMPLIANCE WITH WAGE PAYMENT STATUTES

The bidder hereby certifies that, within the three-year period immediately preceding the bid solicitation date, May 16, 2023, the bidder is not a "willful" violator, as defined in RCW 49.48.082, of any provision of Chapters 49.46, 49.48, or 49.52 RCW, as determined by a final and binding citation and notice of assessment issued by the Department of Labor and Industries or through a civil judgement entered by a court of limited or general jurisdiction.

I certify under penalty of perjury under the laws of the State of Washington that the foregoing is true and correct.

_____
Bidder's Business Name

_____
Signature of Authorized Official*

_____
Printed Name

_____
Title

_____ _____ _____
Date City State

Check One:
Sole Proprietorship ☐ Partnership ☐ Joint Venture ☐ Corporation ☐

State of Incorporation, or if not a corporation, State where business entity was formed:

If a co-partnership, give firm name under which business is transacted:

**If a corporation, proposal must be executed in the corporate name by the president or vice-president (or any other corporate officer accompanied by evidence of authority to sign). If a co-partnership, proposal must be executed by a partner.*

Provided to Builders Exchange of WA, Inc. For usage Conditions Agreement see www.bxwa.com - Always Verify Scal

TITLE VI

The City of Stanwood in accordance with Title VI of the Civil Rights Act of 1964, 78 Stat. 252, 42 U.S.C. 2000d to 2000d-4 and Title 49, Code of Federal Regulations, Department of Transportation, subtitle A, Office of the Secretary, Part 21, nondiscrimination in Federally assisted programs of the Department of Transportation issued pursuant to such Act, hereby notifies all Bidders that it will affirmatively insure that in any Contract entered into pursuant to this advertisement, disadvantaged business enterprises as defined at 49 CFR Part 26 will be afforded full opportunity to submit Bids in response to this invitation and will not be discriminated against on the grounds of race, color, national origin, or sex in consideration for an Award.

Provided to Builders Exchange of WA, Inc. For usage Conditions Agreement see www.bxwa.com - Always Verify Scal

BID SECURITY TRANSMITTAL FORM

Herewith find an executed Bid Bond or a deposit in the form of a cashier's check, postal money order or other security in lieu of a bid bond in the amount of $ _____which amount is not less than five (5%) percent of the total bid.

SIGN HERE _____

BID BOND

KNOW ALL MEN BY THESE PRESENTS:

That we, _____ as Principal and _____as Surety, are held and firmly bound unto the CITY OF STANWOOD as Obligee, in the penal sum of _____ _____Dollars, for the payment of which the Principal and the Surety bind themselves, their heirs, executors, administrators, successors and assigns, jointly and severally, by these presents.

The condition of this obligation is such that if the Obligee shall make any award to the Principal for:

271st Street NW Traffic Calming

according to the terms of the bid made by the Principal, and the Principal shall duly make and enter into a contract with the Obligee in accordance with the terms of said bid and award and shall give bond for the faithful performance thereof, with Surety or Sureties approved by the Obligee; or if the Principal shall, in case of failure so to do, pay and forfeit to the Obligee the penal amount of the deposit specified in the advertisement for bids, then this obligation shall be null and void; otherwise it shall be and remain in full force and effect and the Surety shall forthwith pay and forfeit to the Obligee, as penalty and liquidated damages, the amount of this bond.

SIGNED, SEALED AND DATED THIS_____day of _____

_____
Principal

_____ _____
Surety Agent

_____ _____
Surety address Agent Address

_____ _____
Surety Contact and Phone Number Agent Contact and Phone Number

Dated: _____

Received return of deposit in the sum of $_____.

Provided to Builders Exchange of WA, Inc. For usage Conditions Agreement see www.bxwa.com - Always Verify Scal

PART 2

CONTRACT DOCUMENTS

Provided to Builders Exchange of WA, Inc. For usage Conditions Agreement see www.bxwa.com - Always Verify Scal

SAMPLE PUBLIC WORKS
CONTRACT

This Contract is made and entered into in duplicate this ____ day of _____, 2025 by and between the **CITY OF STANWOOD**, a non-charter code city of the State of Washington, hereinafter referred to as "the City", and _____, a _____, and _____, a Washington _____ ("Contractor") **[Delete this description: LEGAL STATUS OF ENTITY SHOULD BE INSERTED i.e., LLC; Sole Proprietor; LLP; Inc., P.S.; Partnership, Foreign Corporation licensed to do business in Washington State]** .

WITNESSETH:

Whereas, the City desires to have certain public work performed as hereinafter set forth, requiring specialized skills and other supportive capabilities; and

Whereas, the Contractor represents that it is qualified and possesses sufficient skills and the necessary capabilities to perform the services set forth in this Contract.

NOW, THEREFORE, in consideration of the terms, conditions, and agreements contained herein, the parties hereto agree as follows:

1. Scope of Work.

The Contractor shall do all work and furnish all tools, materials, and equipment in order to accomplish the following project:

Project Name, Project ***XX-XX***

in accordance with and as described in

A. this Contract, and

B. the Project Manual, which include the attached plans, Specifications, Special Provisions, submittal requirements, attachments, addenda (if any), Bid Form, Performance and Payment Bond, and

C. the Standard Specifications for Road, Bridge, and Municipal Construction prepared by the Washington State Department of Transportation, as may be specifically modified in the attached Specifications and/or Special Provisions, hereinafter referred to as "the standard specifications",

D. ☐ City of Stanwood Streets and Utilities Standards (referenced but not attached)

E. Other_____

F. Addenda (If any)

and shall perform any alterations in or additions to the work provided under this Contract and every part thereof.

Provided to Builders Exchange of WA, Inc. For usage Conditions Agreement see www.bxwa.com - Always Verify Scal

The Contractor shall provide and bear the expense of all equipment, work, and labor of any sort whatsoever that may be required for the transfer of materials and for constructing and completing the work provided for in this Contract, except as may otherwise be provided in the Project Manual.

2. Time for Performance and Liquidated Damages / Termination of Contract.

A. Time is of the essence in the performance of this Contract and in adhering to the time frames specified herein. The Contractor shall commence work within ten (10) calendar days after notice to proceed from the City, and said work shall be physically completed within ***insert no. days here*** working days after said notice to proceed, unless a different time frame is expressly provided in writing by the City.

B. If said work is not completed within the time for physical completion, the Contractor may be required at the City's sole discretion to pay to the City liquidated damages as set forth in the Project Manual, for each and every day said work remains uncompleted after the expiration of the specified time.

C. Termination of Contract.

1. Except as otherwise provided under this Contract, either party may terminate this Contract upon ten (10) working days' written notice to the other party in the event that said other party is in default and fails to cure such default within that ten-day period, or such longer period as provided by the non-defaulting party. The notice of termination shall state the reasons therefore and the effective date of the termination.

2. The City may also terminate this Contract in accordance with the provisions of Section 1-08.10 of the Standard Specifications.

3. Compensation and Method of Payment.

A. The City shall pay the Contractor for work performed under this Contract as detailed in the bid, as incorporated in the Project Manual.

B. Payments for work provided hereunder shall be made following the performance of such work, unless otherwise permitted by law and approved in writing by the City. No payment shall be made for any work rendered by the Contractor except as identified and set forth in this Contract.

C. Progress payments shall be based on the timely submittal by the Contractor of the City's standard payment request form.

D. Payments for any alterations in or additions to the work provided under this Contract shall be in accordance with the Request For Information (RFI) and/or Construction Change Order (CCO) process as set forth in the Project Manual. Following approval of the RFI and/or CCO, the Contractor shall submit the standard payment request form(s).

Provided to Builders Exchange of WA, Inc. For usage Conditions Agreement see www.bxwa.com - Always Verify Scal

E. The Contractor shall submit payment requests with a completed Application for Payment form, an example of which is included in the Attachments to this Contract. This form includes a lien waiver certification and shall be notarized before submission. Applications for payment not signed or notarized shall be considered incomplete and ineligible for payment consideration. The City shall initiate authorization for payment after receipt of a satisfactorily completed payment request form and shall make payment to the Contractor within approximately thirty (30) days thereafter.

4. Independent Contractor Relationship.

The relationship created by this Contract is that of independent contracting entities. No agent, employee, servant, or representative of the Contractor shall be deemed to be an employee, agent, servant, or representative of the City, and the employees of the Contractor are not entitled to any of the benefits the City provides for its employees. The Contractor shall be solely and entirely responsible for its acts and the acts of its agents, employees, servants, subcontractors, or representatives during the performance of this Contract. The Contractor shall assume full responsibility for payment of all wages and salaries and all federal, state, and local taxes or contributions imposed or required, including, but not limited to, unemployment insurance, workers compensation insurance, social security, and income tax withholding.

5. Prevailing Wage Requirements.

The Contractor shall comply with applicable prevailing wage requirements of the Washington State Department of Labor & Industries, as set forth in Chapter 39.12 RCW and Chapter 296-127 WAC. The Contractor shall document compliance with said requirements and shall file with the City appropriate affidavits, certificates, and/or statements of compliance with the State prevailing wage requirements. The Washington State Prevailing Wage Rates For Public Works Contracts, Snohomish County, incorporated in this Contract have been established by the Department of Labor & Industries and are included as an Attachment to this Contract. The Contractor shall also ensure that any subcontractors or agents of the Contractor shall comply with the prevailing wage and documentation requirements as set forth herein.

6. Indemnification and Hold Harmless.

A. The Contractor shall defend, indemnify, and hold harmless the City, its officers, officials, employees, and volunteers against and from any and all claims, injuries, damages, losses, or suits, including attorney fees, arising out of or in connection with the performance of this Contract, except for injuries and damages caused by the sole negligence of the City.

B. The Contractor's duty to indemnify the City shall not apply to liability for damages arising out of bodily injury to persons or damage to property caused by or resulting from the sole negligence of the City or its elected officials, agents, officers and/or employees.

C. The Contractor's duty to indemnify the City for liability for damages arising out of bodily injury to persons or damage to property caused by or resulting from the concurrent negligence of (a) the City and/or its elected officials, agents, officers and/or employees, and (b) the Contractor and/or its directors, officers, agents, employees, consultants, and/or subcontractors, shall apply only to the extent of

Provided to Builders Exchange of WA, Inc. For usage Conditions Agreement see www.bxwa.com - Always Verify Scal

negligence of Contractor and/or its directors, officers, agents, employees, consultants, and/or subcontractors

D. Should a court of competent jurisdiction determine that this Contract is subject to RCW 4.24.115, then, in the event of liability for damages arising out of bodily injury to persons or damages to property caused by or resulting from the concurrent negligence of the Contractor and the City, its officers, officials, employees, and volunteers, the Contractor's liability hereunder shall be only to the extent of the Contractor's negligence.

It is further specifically and expressly understood that the indemnification provided herein constitutes the Contractor's waiver of immunity under Industrial Insurance, Title 51 RCW, solely for the purposes of this indemnification. This waiver has been mutually negotiated by the parties.

E. Nothing contained in this section or Contract shall be construed to create a liability or a right of indemnification by any third party.

F. The provisions of this section shall survive the expiration or termination of this Contract.

7. Insurance.

A. **Insurance Term.**

The Contractor shall procure and maintain for the duration of the Agreement, insurance against claims for injuries to persons or damage to property which may arise, as required in this Section, without interruption from or in connection with the performance commencement of the Contractor's work through the term of the work hereunder by the Contractor, their agents, representatives, employees or subcontractors contract and for thirty (30) days after the Physical Completion date, unless otherwise indicated herein.

B. **No Limitation**

Contractor's maintenance of insurance, its scope of coverage and limits as required herein shall not be construed to limit the liability of the Contractor to the coverage provided by such insurance, or otherwise limit the City's recourse to any remedy available at law or in equity.

C. **Minimum Scope of Insurance**.

Contractors required insurance shall be of the types and coverage as stated below:

1. Automobile Liability insurance covering all owned, non-owned, hired and leased vehicles. Coverage shall be written on at least as broad as Insurance Services Office (ISO) form CA Automobile 00 01 or a substitute form providing equivalent liability coverage. If necessary, the policy shall be endorsed to provide contractual liability coverage.

2 Commercial General Liability insurance shall be written on at least as broad as ISO occurrence form CG 00 01 and shall cover liability arising from premises, operations, stop gap liability, independent contractors, products-completed operations, personal injury and advertising injury, and liability assumed under an insured contract. The Commercial General Liability insurance shall be endorsed

Provided to Builders Exchange of WA, Inc. For usage Conditions Agreement see www.bxwa.com - Always Verify Scal

to provide the per project general aggregate limit using ISO form CG 25 03 05 09 or an equivalent endorsement There shall be no exclusion for liability arising from explosion, collapse or underground property damage. The City shall be named as an additional insured under the Contractor's Commercial General Liability insurance policy with respect to the work performed for the City using ISO Additional Insured endorsement CG 20 10 10 01 and Additional Insured-Completed Operations endorsement CG 20 37 10 01 or substitute endorsements providing at least as broad of coverage.

3. Workers' Compensation coverage as required by the Industrial Insurance laws of the State of Washington

4. ☐ Required. Builders Risk insurance covering interests of the City, the Contractor, Subcontractors, and Sub-contractors in the work. Builders Risk insurance shall be on a special perils policy form and shall insure against the perils of fire and extended coverage and physical loss or damage including flood, earthquake, theft, vandalism, malicious mischief, and collapse. The Builders Risk insurance shall include coverage for temporary buildings, debris removal and damage to materials in transit or stored off-site. This Builders Risk insurance covering the work will have a deductible of $5,000 for each occurrence, which will be the responsibility of the Contractor. Higher deductibles for flood and earthquake perils may be accepted by the City upon written request by the Contractor and written acceptance by the City. Any increased deductibles accepted by the City will remain the responsibility of the Contractor. The Builders Risk insurance shall be maintained until final acceptance of the work by the City. An installation floater may be acceptable in lieu of Builders Risk for renovation projects only if approved in writing by the City.

5. ☐ Required. Contractors Pollution Liability insurance covering losses caused by pollution conditions that arise from the operations of the Contractor. Contractors Pollution Liability insurance shall be written in an amount of at least $1,000,000 per loss, with an annual aggregate of at least $1,000,000. Contractors Pollution Liability shall cover bodily injury, property damage, cleanup costs and defense including costs and expenses incurred in the investigation, defense, or settlement of claims.

If the Contractors Pollution Liability insurance is written on a claims-made basis, the Contractor warrants that any retroactive date applicable to coverage under the policy precedes the effective date of this contract; and that continuous coverage will be maintained or an extended discovery period will be exercised for a period of three (3) years beginning from the time that work under the contract is completed.

The City shall be named by endorsement as an additional insured on the Contractors Pollution Liability insurance policy.

If the scope of services as defined in this contract includes the disposal of any hazardous materials from the job site, the Contractor must furnish to the City evidence of Pollution Liability insurance maintained by the disposal site operator for losses arising from the insured facility accepting waste under this contract.

Provided to Builders Exchange of WA, Inc. For usage Conditions Agreement see www.bxwa.com - Always Verify Scal

Coverage certified to the City under this paragraph must be maintained in minimum amounts of $1,000,000 per loss, with an annual aggregate of at least $1,000,000.

Pollution Liability coverage at least as broad as that provided under ISO Pollution Liability-Broadened Coverage for Covered Autos Endorsement CA 99 48 shall be provided, and the Motor Carrier Act Endorsement (MCS 90) shall be attached.

D. **Minimum Amounts of Insurance.**
The Contractor shall maintain the following insurance limits:

1. Automobile Liability insurance with a minimum combined single limit for bodily injury and property damage of $1,000,000 per accident.

2. Commercial General Liability insurance shall be written with limits no less than $3,000,000 each occurrence, $3,000,000 general aggregate and a $2,000,000 products-completed operations aggregate limit.

3. ☐ Required. Builders Risk insurance shall be written in the amount of the completed value of the project with no coinsurance provisions.

4. ☐ Required. Contractors Pollution Liability shall be written in the amounts set forth above.

E. **City Full Availability of Contractor Limits**
If the Contractor maintains higher insurance limits than the minimums shown above, the City shall be insured for the full available limits of Commercial General and Excess or Umbrella liability maintained by the Contractor, irrespective of whether such limits maintained by the Contractor are greater than those required by this contract or whether any certificate of insurance furnished to the City evidences limits of liability lower than those maintained by the Contractor.

F. **Other Insurance Provisions.**
The Contractor's Automobile Liability, Commercial General Liability, and Builders Risk insurance policies shall be primary insurance with respect to the City. Any insurance, self-insurance, or insurance pool coverage maintained by the City shall be in excess of the Contractor's insurance and shall not contribute with it.

G. **Acceptability of Insurers.**
Insurance is to be placed with insurers with a current A.M. Best rating of not less than A:VII.

H. **Verification of Coverage.**
The Contractor shall furnish the City with original certificates and a copy of the amendatory endorsements, including but not necessarily limited to the additional insured endorsement, evidencing the Automobile Liability and Commercial General Liability insurance of the Contractor before commencement of the work. Before any exposure to loss may occur, the Contractor shall file with the City a copy of the Builders Risk insurance policy that includes all applicable conditions, exclusions, definitions, terms, and endorsements

Provided to Builders Exchange of WA, Inc. For usage Conditions Agreement see www.bxwa.com - Always Verify Scal

related to this project. Throughout the term of this Contract, upon request by the City , the Contractor shall furnish certified copies of all required insurance policies, including endorsements, required in this contract and evidence of all subcontractors' coverage.

☐ Required. Before any exposure to loss may occur, the Contractor shall file with the City a copy of the Builders Risk insurance policy that includes all applicable conditions, exclusions, definitions, terms and endorsements related to this Project.

☐ Required. Before any exposure to loss may occur, the Contractor shall file with the City a copy of the Pollution Liability insurance that includes all applicable conditions, exclusions, definitions, terms and endorsements related to this Project.

I. **Contractor's Insurance for Other Losses**.
The Contractor shall assume full responsibility for all loss or damage from any cause whatsoever to any tools, Contractor's employee owned tools, machinery, equipment, or motor vehicles owned or rented by the Contractor, or the Contractor's agents, suppliers or subcontractors as well as to any temporary structures, scaffolding and protective fences.

J. **Subcontractors.**
The Contractor shall include all subcontractors as insured under its policies or shall furnish separate certifications and endorsements for each subcontractor. All coverage for subcontractors shall be subject to all of the same insurance requirements as stated herein for the Contractor.

The Contractor shall cause each and every Subcontractor to provide insurance coverage that complies with all applicable requirements of the Contractor-provided insurance as set forth herein, except the Contractor shall have sole responsibility for determining the limits of coverage required to be obtained by Subcontractors. The Contractor shall ensure that the City is an additional insured on each and every Subcontractor's Commercial General liability insurance policy using an endorsement at least as broad as ISO Additional Insured endorsement CG 20 10 10 01 for ongoing operations and CG 20 37 10 01 for completed operations..

K. **Waiver of Subrogation.**
The Contractor and the City waive all rights against each other, any of their subcontractors, sub-subcontractors or lower tier subcontractors, agents and employees, each of the other, for damages caused by fire or other perils to the extent covered by Builders Risk insurance or other property insurance obtained pursuant to the Insurance Requirements Section of this Contract or other property insurance applicable to the work. The policies shall provide such waivers by endorsement or otherwise.

L. **Notice of Cancellation of Insurance.**
The Contractor shall provide the City and all Additional Insureds for this work with written notice of any policy cancellation within two business days of their receipt of such notice.

M. **Failure to Maintain Insurance**
Failure on the part of the Contractor to maintain the insurance as required shall constitute a material breach of contract, upon which the City may, after giving five business days' notice to the Contractor to correct the breach, immediately terminate the contract or, at its

Provided to Builders Exchange of WA, Inc. For usage Conditions Agreement see www.bxwa.com - Always Verify Scal

discretion, procure or renew such insurance and pay any and all premiums in connection therewith, with any sums so expended to be repaid to the City on demand, or at the sole discretion of the City, offset against funds due the Contractor from the City.

8. Compliance with Laws.

A. The Contractor shall comply with all applicable federal, state, and local laws, including regulations for licensing, certification, and operation of facilities and programs, and accreditation and licensing of individuals, and any other standards or criteria as set forth in the Project Manual.

B. The Contractor shall pay any applicable business and permit fees and taxes which may be required for the performance of the work.

C. The Contractor shall comply with all legal and permitting requirements as set forth in the Project Manual.

9. Non-discrimination.

During the performance of this Contract, the Contractor shall comply with all applicable equal opportunity laws and/or regulations and shall not discriminate on the basis of race, age, color, sex, sexual orientation, religion, national origin, creed, veteran status, marital status, political affiliation, or the presence of any sensory, mental or physical handicap. This provision shall include but not be limited to the following: employment, upgrading, demotion, transfer, recruitment, advertising, layoff or termination, rates of pay or other forms of compensation, selection for training, and the provision of work and services under this Contract. The Contractor further agrees to maintain notices, posted in conspicuous places, setting forth the provisions of this nondiscrimination clause. The Contractor understands that violation of this provision shall be cause for immediate termination of this Contract and the Contractor may be barred from performing any services or work for the City in the future unless the Contractor demonstrates to the satisfaction of the City that discriminatory practices have been eliminated and that recurrence of such discriminatory practices is unlikely.

A. The parties will maintain open hiring and employment practices and will welcome applications for employment in all positions from qualified individuals who are members of the above-stated minorities.

B. The parties will comply strictly with all requirements of applicable federal, state or local laws or regulations issued pursuant thereto, relating to the establishment of nondiscriminatory requirements in hiring and employment practices and assuring the service of all patrons and customers without discrimination with respect to the above-stated minority status.

10. Assignment and Subcontractors.

A. The Contractor shall not assign this Contract or any interest herein, nor any money due to or to become due hereunder, without first obtaining the written consent of the City.

B. The Contractor shall not subcontract any part of the services to be performed hereunder without first obtaining the consent of the City and complying with the

Provided to Builders Exchange of WA, Inc. For usage Conditions Agreement see www.bxwa.com - Always Verify Scal

provisions of this section.

C. In the event the Contractor does assign this contract or employ any subcontractor, the Contractor agrees to bind in writing every assignee and subcontractor to the applicable terms and conditions of the contract documents.

D. The Contractor shall, before commencing any work, notify the Owner in writing of the names of any proposed subcontractors. The Contractor shall not employ any subcontractor or other person or organization (including those who are to furnish the principal items or materials or equipment), whether initially or as a substitute, against whom the Owner may have reasonable objection. Each subcontractor or other person or organization shall be identified in writing to the Owner by the Contractor prior to the date this Contract is signed by the Contractor. Acceptance of any subcontractor or assignee by the Owner shall not constitute a waiver of any right of the Owner to reject defective work or work not in conformance with the contract documents. If the Owner, at any time, has reasonable objection to a subcontractor or assignee, the Contractor shall submit an acceptable substitute.

E. The Contractor shall be fully responsible for all acts and omissions of its assignees, subcontractors and of persons and organization directly or indirectly employed by it and of persons and organizations for whose acts any of them may be liable to the same extent that it is responsible for the acts and omissions of person directly employed by it.

F. The divisions and sections of the specifications and the identifications of any drawings shall not control the Contractor in dividing the work among subcontractors or delineating the work to be performed by any specific trade.

G. Nothing contained in the contract documents shall create or be construed to create any relationship, contractual or otherwise, between the Owner and any subcontractor or assignee. Nothing in the contract documents shall create any obligation on the part of the Owner to pay or to assure payment of any monies due any subcontractor or assignee.

H. The Contractor hereby assigns to the City any and all claims for overcharges resulting from antitrust violations as to goods and materials purchased in connection with this Contract, except as to overcharges resulting from antitrust violations commencing after the date of the bid or other event establishing the price of this Contract. In addition, the Contractor warrants and represents that each of its suppliers and subcontractors shall assign any and all such claims for overcharges to the City in accordance with the terms of this provision. The Contractor further agrees to give the City immediate notice of the existence of any such claim.

I. In addition to all other obligations of the contractor, if the contractor does employ any approved subcontractor, the contractor shall supply to every approved subcontractor a copy of the form, provided in the project manual, to establish written proof that each subcontract and lower-tier subcontract is a written

Provided to Builders Exchange of WA, Inc. For usage Conditions Agreement see www.bxwa.com - Always Verify Scal

document and contains, as a part, the current prevailing wage rates. The contractor, each approved subcontractor and each approved lower-tier subcontractor shall complete and deliver the form directly to the City.

11. Contract Administration and Notices.

This Contract shall be administered for the City by Kevin Hushagen, Public Works Director, and shall be administered for the Contractor by the Contractor's Contract Representative, Insert Name of Contractor Representative. Unless stated otherwise herein, all notices and demands shall be in writing and sent or hand-delivered to the parties at their addresses as follows:

To City:	To Contractor:
Kevin Hushagen, PW Director	Name and Title of Binding Officer
City of Stanwood	Contractor Business Name
10220 270th Street NW	Street Address
Stanwood, WA 98292	City, State ZIP
360-629-9782	Telephone Number

or to such addresses as the parties may hereafter designate in writing. Notices and/or demands shall be sent by registered or certified mail, postage prepaid, or hand-delivered. Such notices shall be deemed effective when mailed or hand-delivered at the addresses specified above.

12. Interpretation and Venue. This Contract shall be interpreted and construed in accordance with the laws of the State of Washington. The venue of any litigation between the parties regarding this Contract shall be Snohomish County, Washington.

13. Severability

A. If a court of competent jurisdiction holds any part, term or provision of this Contract to be illegal or invalid, in whole or in part, the validity of the remaining provisions shall not be affected, and the parties' rights and obligations shall be construed and enforced as if the Contract did not contain the particular provision held to be invalid.

B. If any provision of this Contract is in direct conflict with any statutory provision of the State of Washington, that provision which may conflict shall be deemed inoperative and null and void insofar as it may conflict, and shall be deemed modified to conform to such statutory provision.

14. Non-Waiver.

A waiver by either party hereto of a breach of the other party hereto of any covenant or condition of this Contract shall not impair the right of the party not in default to avail itself of any subsequent breach thereof. Leniency, delay or failure of either party to insist upon strict performance of any Contract, covenant or condition of this Contract, or to exercise any right herein given in any one or more instances, shall not be construed as a waiver or relinquishment of any such Contract, covenant, condition or right.

15. Survival.

Provided to Builders Exchange of WA, Inc. For usage Conditions Agreement see www.bxwa.com - Always Verify Scal

Any provision of this Contract which imposes an obligation after termination or expiration of this Contract shall survive the term or expiration of this Contract and shall be binding on the parties to this Contract.

16. Authority.

The person executing this Agreement on behalf of Contractor represents and warrants that he or she has been fully authorized by Contractor to execute this Agreement on its behalf and to legally bind Contractor to all the terms, performances and provisions of this Agreement. The person executing this Contractor on behalf of the City represents and warrants that he or she has been fully authorized by the City to execute this Contractor on its behalf and to legally bind the City to all the terms, performances and provisions of this Contractor.

IN WITNESS WHEREOF, the parties hereto have caused this Contract to be executed the day and year first set forth above.

IN WITNESS WHEREOF, the parties hereto have caused this Contract to be executed the day and year first hereinabove written.

CITY OF STANWOOD

By_____
Sid Roberts, Mayor

Approved as to form:

_____
Nikki Thompson, City Attorney

_____

By _____
name, title

Attest:

_____
Lisa Sokolik, City Clerk

Provided to Builders Exchange of WA, Inc. For usage Conditions Agreement see www.bxwa.com - Always Verify Scal

PERFORMANCE and PAYMENT BOND

Bond to the City of Stanwood Bond # _____

KNOW ALL MEN BY THESE PRESENTS:

That we, the undersigned, _____ as Principal, and_____ _____a corporation, organized and existing under the laws of the State of Washington, as a surety corporation, and qualified under the laws of the State of Washington to become surety upon bonds of contractors with municipal corporations as surety, are jointly and severally held and firmly bound to the **City of Stanwood** in the penal sum of $___ _____ for the payment of which sum on demand we bind ourselves and our successors, heirs, administrators or personal representatives, as the case may be.

This obligation is entered into pursuant to the statutes of the State of Washington and the ordinances of the City of Lake Stevens.

Dated at _____, Washington, this ____ day of _____, 20___.

The conditions of the above obligation are such that:

WHEREAS, the City of Stanwood has let or is about to let to the said_____ _____ the above bounded Principal, a certain contract, the said contract being numbered _____, and providing for 271st Street NW Traffic Calming (which contract is referred to herein and is made a part hereof as though attached hereto), and

WHEREAS, the said Principal has accepted, or is about to accept, the said contract, and undertake to perform the work therein provided for in the manner and within the time set forth; now, therefore,

If the said Principal,_____, shall faithfully perform all of the provisions of said contract in the manner and within the time therein set forth, or within such extensions of time as may be granted under said contract, and shall pay all laborers, mechanics, subcontractors and materialmen, and all persons who shall supply said Principal or subcontractors with provisions and supplies for the carrying on of said work, and shall indemnify and hold the City of Stanwood harmless from any damage or expense by reason of failure of performance as specified in said contract or from defects appearing or developing in the material or workmanship provided or performed under said contract within a period of one year after its acceptance thereof by the City of Stanwood, then and in that event, this obligation shall be void; but otherwise, it shall be and remain in full force and effect.

Signed this ____ day of _____, 20___.

_____	_____
Surety	Principal
By_____	By_____
_____	_____
Title	Title
_____	_____
Surety Address	Agent Address
_____	_____
Surety Contact and Phone Number	Agent Contact and Phone Number

Provided to Builders Exchange of WA, Inc. For usage Conditions Agreement see www.bxwa.com - Always Verify Scal

ESCROW AGREEMENT for RETAINED PERCENTAGE

271st Street NW Traffic Calming, Project *X*

Escrow No.: _____

City of Stanwood Contract No. _____

Completion Date: _____

TO:

THIS ESCROW AGREEMENT is for the investment of the retained percentage of the above contract, in accordance with chapter 60.28 of the Revised Code of Washington. It is limited to FDIC insured Washington State Chartered Banks who are covered by the State of Washington Public Deposit Protection Act.

The undersigned,_____, (as "Contractor"), has directed the CITY OF STANWOOD (as "City"), to deliver to you its warrants which shall be payable to you and/or the contractor. The warrants are to be held and disposed of by you in accordance with the following instruction:

INSTRUCTIONS

1. Upon delivery the warrants shall be endorsed by you and forwarded to the City for collection. You shall use the monies to purchase investments selected by the Contractor and approved by the City. You may follow the last written direction received by you from the Contractor, for each purchase, provided the direction otherwise conforms with this agreement. Acceptable investments are:
   A. Bills, certificates, notes or bonds of the United States;
   B. Other obligations of the United States or its agencies;
   C. Obligations of any corporation wholly owned by the Government of the United States;
   D. Indebtedness of the Federal National Mortgage Association;
   E. Time deposits in commercial banks;
   F. Other investments, except stocks, selected by the Contractor, subject to express prior written consent of the City.
2. The investments shall be in a form which allows you alone to reconvert them into money if you are required to do so by the City.
3. The investments must mature on or prior to the date set for the completion of the contract, including extension there of or thirty (30) days following the final acceptance of the work.
4. When interest on the investments accrues and is paid, you shall collect the interest and forward it to the Contractor unless otherwise directed by the Contractor.
5. You are not authorized to deliver to the Contractor all or any part of the investments held by you pursuant to this agreement (or any monies derived from the sale of such investments, or the negotiation of the City's warrants) **except** in accordance with the written instructions from the City. Compliance with such instructions shall relieve you of any further liability related thereto.
6. In the event the City orders you, in writing, to reconvert the investments and return all monies, you shall do so within thirty (30) days of receipt of the order.
7. The Contractor agrees to compensate you for your services in accordance with your current published schedule of applicable escrow fees. Payment of all fees shall be the sole responsibility of the Contractor and shall not be deducted from any monies placed with you pursuant to this agreement until and unless the City directs the release to the Contractor of the investments and monies held hereunder, whereupon you shall be entitled to reimburse yourself from such monies for the entire amount of your fee.
8. This agreement shall not be binding until signed by both parties and accepted by you.
9. This document contains the entire agreement between you, the Contractor, and the City, with respect to this Escrow, and you are not a party to, nor bound by any instrument or agreement other than this. You shall not be required to take notice of any default or any other matter, nor be bound by nor required to give notice or demand, nor required to take any action whatever except as herein expressly provided. You shall not be liable for any loss or damage not caused by your own negligence or willful misconduct.

CONTRACTOR

Federal Tax I.D. No. _____

By: _____

Title: _____

Address: _____

_____

DATE: _____

CITY OF STANWOOD

By: _____

Title: _____

DATE: _____

THE ABOVE ESCROW AGREEMENT RECEIVED AND ACCEPTED on the _____ day of _____ 20 .

BANK

By: _____

Title: _____

Address: _____

_____

DISTRIBUTION:
City Clerk
Financial Institution
Contractor
File Copy

Provided to Builders Exchange of WA, Inc. For usage Conditions Agreement see www.bxwa.com - Always Verify Scal

PART III

STANDARD SPECIFICATIONS

Provided to Builders Exchange of WA, Inc. For usage Conditions Agreement see www.bxwa.com - Always Verify Scal

STANDARD SPECIFICATIONS

The work on this project shall be accomplished in accordance with the *Standard Specifications for Road, Bridge and Municipal Construction*, 2025 edition, as issued by the Washington State Department of Transportation (WSDOT) and the American Public Works Association (APWA), Washington State Chapter (hereafter "Standard Specifications"). The Standard Specifications, as modified or supplemented by these Special Provisions, all of which are made a part of the Contract Documents, shall govern all of the Work.

The current version of the WSDOT Standard Specifications for Road, Bridge, and Municipal construction can be found here:

http://www.wsdot.wa.gov/Business/Construction/SpecificationsAmendmentsGSPs.htm

The Standard specifications are modified by the special provisions to the General Requirements (Division 1), presented herein and the Standard Specifications and details contained in the contract plans. Section and subsection numbers of the special provisions refer to corresponding section and subsection numbers of the Standard Specifications.

Provided to Builders Exchange of WA, Inc. For usage Conditions Agreement see www.bxwa.com - Always Verify Scal

SPECIAL PROVISIONS

Provided to Builders Exchange of WA, Inc. For usage Conditions Agreement see www.bxwa.com - Always Verify Scal

INTRODUCTION TO THE SPECIAL PROVISIONS

(January 4, 2024 APWA GSP, Option A)

The work on this project shall be accomplished in accordance with the *Standard Specifications for Road, Bridge and Municipal Construction*, 2025 edition, as issued by the Washington State Department of Transportation (WSDOT) and the American Public Works Association (APWA), Washington State Chapter (hereafter "Standard Specifications"). The Standard Specifications, as modified or supplemented by these Special Provisions, all of which are made a part of the Contract Documents, shall govern all of the Work.

These Special Provisions are made up of both General Special Provisions (GSPs) from various sources, which may have project-specific fill-ins; and project-specific Special Provisions. Each Provision either supplements, modifies, or replaces the comparable Standard Specification, or is a new Provision. The deletion, amendment, alteration, or addition to any subsection or portion of the Standard Specifications is meant to pertain only to that particular portion of the section, and in no way should it be interpreted that the balance of the section does not apply.

The GSPs are labeled under the headers of each GSP, with the effective date of the GSP and its source. For example:

(March 8, 2013 APWA GSP)
(April 1, 2013 WSDOTGSP)
(COS GSP) Agency Special Provision

Project specific special provisions are labeled without a date as such:
(*****)

Also incorporated into the Contract Documents by reference are:

- *Manual on Uniform Traffic Control Devices for Streets and Highways*, currently adopted edition, with Washington State modifications, if any
- *Standard Plans for Road, Bridge and Municipal Construction*, WSDOT Manual M21-01, current edition
- *City of Stanwood Street and Utility Standards*, City of Stanwood Public Works Department, current edition
- *City of Stanwood Municipal Code (Current Web Edition)*
- *Public Right-of-Way Accessibility Guidelines, August 8, 2023*

Contractor shall obtain copies of these publications, at Contractor's own expense.

Provided to Builders Exchange of WA, Inc. For usage Conditions Agreement see www.bxwa.com - Always Verify Scal

Division 1
General Requirements

DESCRIPTION OF WORK

(March 13, 1995 WSDOT GSP)

This Contract provides for the improvement of *** the intersection of 271st Street NW and 88th Avenue NW with new curb bulbouts, new paver block and cement concrete sidewalks, new roadway pavements, new crosswalks, stormwater pipes and stormwater structures, curb ramps, and channelization, and improving the mid-block crossing of 271st Street NW with new curb bulbouts, curb ramps, RRFB system, and overhead string lighting *** and other work, all in accordance with the attached Contract Plans, these Contract Provisions, and the Standard Specifications.

1-01 Definition and Terms

1-01.3 Definitions

(January 19, 2022 APWA GSP)

Delete the heading **Completion Dates** and the three paragraphs that follow it, and replace them with the following:

Dates

Bid Opening Date
The date on which the Contracting Agency publicly opens and reads the Bids.

Award Date
The date of the formal decision of the Contracting Agency to accept the lowest responsible and responsive Bidder for the Work.

Contract Execution Date
The date the Contracting Agency officially binds the Agency to the Contract.

Notice to Proceed Date
The date stated in the Notice to Proceed on which the Contract time begins.

Substantial Completion Date
The day the Engineer determines the Contracting Agency has full and unrestricted use and benefit of the facilities, both from the operational and safety standpoint, any remaining traffic disruptions will be rare and brief, and only minor incidental work, replacement of temporary substitute facilities, plant establishment periods, or correction or repair remains for the Physical Completion of the total Contract.

Physical Completion Date
The day all of the Work is physically completed on the project. All documentation required by the Contract and required by law does not necessarily need to be furnished by the Contractor by this date.

Completion Date
The day all the Work specified in the Contract is completed and all the obligations of the Contractor under the contract are fulfilled by the Contractor. All documentation required by the Contract and required by law must be furnished by the Contractor before establishment of this date.

Provided to Builders Exchange of WA, Inc. For usage Conditions Agreement see www.bxwa.com - Always Verify Scal

Final Acceptance Date
The date on which the Contracting Agency accepts the Work as complete.

Supplement this Section with the following:

All references in the Standard Specifications or WSDOT General Special Provisions, to the terms "Department of Transportation", "Washington State Transportation Commission", "Commission", "Secretary of Transportation", "Secretary", "Headquarters", and "State Treasurer" shall be revised to read "Contracting Agency".

All references to the terms "State" or "state" shall be revised to read "Contracting Agency" unless the reference is to an administrative agency of the State of Washington, a State statute or regulation, or the context reasonably indicates otherwise.

All references to "State Materials Laboratory" shall be revised to read "Contracting Agency designated location".

All references to "final contract voucher certification" shall be interpreted to mean the Contracting Agency form(s) by which final payment is authorized, and final completion and acceptance granted.

Additive
A supplemental unit of work or group of bid items, identified separately in the Bid Proposal, which may, at the discretion of the Contracting Agency, be awarded in addition to the base bid.

Alternate
One of two or more units of work or groups of bid items, identified separately in the Bid Proposal, from which the Contracting Agency may make a choice between different methods or material of construction for performing the same work.

Business Day
A business day is any day from Monday through Friday except holidays as listed in Section 1-08.5.

Contract Bond
The definition in the Standard Specifications for "Contract Bond" applies to whatever bond form(s) are required by the Contract Documents, which may be a combination of a Payment Bond and a Performance Bond.

Contract Documents
See definition for "Contract".

Contract Time
The period of time established by the terms and conditions of the Contract within which the Work must be physically completed.

Notice of Award
The written notice from the Contracting Agency to the successful Bidder signifying the Contracting Agency's acceptance of the Bid Proposal.

Provided to Builders Exchange of WA, Inc. For usage Conditions Agreement see www.bxwa.com - Always Verify Scal

Notice to Proceed
The written notice from the Contracting Agency or Engineer to the Contractor authorizing and directing the Contractor to proceed with the Work and establishing the date on which the Contract time begins.

Traffic
Both vehicular and non-vehicular traffic, such as pedestrians, bicyclists, wheelchairs, and equestrian traffic.

1-02 BID PROCEDURES AND CONDITIONS

1-02.1 Prequalification of Bidders

Delete this section and replace it with the following:

1-02.1 Qualifications of Bidder
(January 24, 2011 APWA GSP)

Before award of a public works contract, a bidder must meet at least the minimum qualifications of RCW 39.04.350(1) to be considered a responsible bidder and qualified to be awarded a public works project.

(COS GSP)
This section is supplemented with the following:

Bidders shall complete and sign the **Bidder's Construction Experience** form contained in the Proposal. Said form must be submitted with the bid proposal.

1-02.2 Plans and Specifications
(June 27, 2011 APWA GSP)

Delete this section and replace it with the following:

Information as to where Bid Documents can be obtained or reviewed can be found in the Call for Bids (Advertisement for Bids) for the work.

After award of the contract, plans and specifications will be issued to the Contractor at no cost as detailed below:

To Prime Contractor	No. of Sets	Basis of Distribution
Reduced plans (11" x 17")	2	Furnished automatically upon award.
Contract Provisions	2	Furnished automatically upon award.
Large plans (e.g., 22" x 34")	2	Furnished only upon request.

Provided to Builders Exchange of WA, Inc. For usage Conditions Agreement see www.bxwa.com - Always Verify Scal

Additional plans and Contract Provisions may be obtained by the Contractor from the source stated in the Call for Bids, at the Contractor's own expense.

1-02.4 Examination of Plans, Specifications and Site of Work

1-02.4(1) General

(December 30, 2022 APWA GSP Option A)

The first sentence of the ninth paragraph, beginning with "Prospective Bidder desiring...", is revised to read:

> Prospective Bidders desiring an explanation or interpretation of the Bid Documents, shall request the explanation or interpretation in writing soon enough to allow a written reply to reach all prospective Bidders before the submission of their Bids.

(COS GSP)

This section is supplemented with the following:

> The Contractor shall verify the locations and elevations of existing pipelines, structures, grades, and utilities prior to construction. The Contractor acknowledges that he has satisfied himself as to the nature and location of the work and the general and local conditions, including, but not limited to those bearing upon transportation, disposal, handling groundwater, access to the sites, and conflicts with pipelines and structures. The Owner assumes no responsibility for any conclusions or interpretations made by the Contractor on the basis of the information made available.
>
> The Contractor shall be responsible for any breakage of the utilities or services resulting from his operations, and shall indemnify, defend and hold the Owner and its agents harmless from any claim resulting from disruption of or damage to same.

1-02.5 Proposal Forms

(November 25, 2024 APWA GSP)

Delete this section and replace it with the following:

> The Proposal Form will identify the project and its location and describe the work. It will also list estimated quantities, units of measurement, the items of work, and the materials to be furnished at the unit bid prices. The bidder shall complete spaces on the proposal form that call for, but are not limited to, unit prices; extensions; summations; the total bid amount; signatures; date; and, where applicable, retail sales taxes and acknowledgment of addenda; the bidder's name, address, telephone number, and signature; the bidder's DBE commitment, if applicable; a State of Washington Contractor's Registration Number; and a Business License Number, if applicable. Bids shall be in legible figures (not words) written in ink or typed and expressed in U.S. dollars. The required certifications are included as part of the Proposal Form.

Provided to Builders Exchange of WA, Inc. For usage Conditions Agreement see www.bxwa.com - Always Verify Scal

The Contracting Agency reserves the right to arrange the proposal forms with alternates and additives, if such be to the advantage of the Contracting Agency. The bidder shall bid on all alternates and additives set forth in the Proposal Form unless otherwise specified.

1-02.6 Preparation of Proposal

(*November 25, 2024 APWA GSP Option B*)

Supplement the second paragraph with the following:

4. If a minimum bid amount has been established for any item, the unit or lump sum price must equal or exceed the minimum amount stated.

Delete the last two paragraphs, and replace them with the following:

The Bidder shall submit with their Bid a completed Contractor Certification Wage Law Compliance form, provided by the Contracting Agency. Failure to return this certification as part of the Bid Proposal package will make this Bid Nonresponsive and ineligible for Award. A Contractor Certification of Wage Law Compliance form is included in the Proposal Forms.

The Bidder shall make no stipulation on the Bid Form, nor qualify the bid in any manner.

A bid by a corporation shall be executed in the corporate name, by the president or a vice president (or other corporate officer accompanied by evidence of authority to sign).

A bid by a partnership shall be executed in the partnership name and signed by a partner.

A bid by a joint venture shall be executed in the joint venture name and signed by a member of the joint venture.

1-02.7 Bid Deposit

(March 8, 2013 APWA GSP)

Supplement this section with the following:

Bid bonds shall contain the following:

1. Contracting Agency-assigned number for the project;
2. Name of the project;
3. The Contracting Agency named as obligee;
4. The amount of the bid bond stated either as a dollar figure or as a percentage which represents five percent of the maximum bid amount that could be awarded;
5. Signature of the bidder's officer empowered to sign official statements. The signature of the person authorized to submit the bid should agree with the signature on the bond, and the title of the person must accompany the said signature;
6. The signature of the surety's officer empowered to sign the bond and the power of attorney.

If so stated in the Contract Provisions, bidder must use the bond form included in the Contract Provisions.

Provided to Builders Exchange of WA, Inc. For usage Conditions Agreement see www.bxwa.com - Always Verify Scal

If so stated in the Contract Provisions, cash will not be accepted for a bid deposit.

1-02.8 Noncollusion Declaration and Lobbying Certification

(COS GSP)

Supplement this section with the following:

A copy of the Noncollusion Affidavit shall be submitted with the Bidder's proposal. A copy of the required Affidavit is provided in the bid forms included with the Call for Bids (Advertisement for Bids) for this work.

1-02.10 Withdrawing, Revising, or Supplementing Proposal

(July 23, 2015 APWA GSP)

Delete this section, and replace it with the following:

After submitting a physical Bid Proposal to the Contracting Agency, the Bidder may withdraw, revise, or supplement it if:

1. The Bidder submits a written request signed by an authorized person and physically delivers it to the place designated for receipt of Bid Proposals, and
2. The Contracting Agency receives the request before the time set for receipt of Bid Proposals, and
3. The revised or supplemented Bid Proposal (if any) is received by the Contracting Agency before the time set for receipt of Bid Proposals.

If the Bidder's request to withdraw, revise, or supplement its Bid Proposal is received before the time set for receipt of Bid Proposals, the Contracting Agency will return the unopened Proposal package to the Bidder. The Bidder must then submit the revised or supplemented package in its entirety. If the Bidder does not submit a revised or supplemented package, then its bid shall be considered withdrawn.

Late revised or supplemented Bid Proposals or late withdrawal requests will be date recorded by the Contracting Agency and returned unopened. Mailed, emailed, or faxed requests to withdraw, revise, or supplement a Bid Proposal are not acceptable.

1-02.12 Public Opening of Proposals

(COS GSP)

Section 1-02.12 is supplemented with the following:

Date of Opening of Bids

Sealed Bids are to be received at the bid opening location prior to the time specified in the Call for Bids (Advertisement for Bids). The bid opening location, date, and time for this project is found in the Call for Bids for this work.

Provided to Builders Exchange of WA, Inc. For usage Conditions Agreement see www.bxwa.com - Always Verify Scal

1-02.13 Irregular Proposals

(September 3, 2024 APWA GSP)

Delete this section and replace it with the following:

1. A Proposal will be considered irregular and will be rejected if:
   a. The Bidder is not prequalified when so required;
   b. The Bidder adds provisions reserving the right to reject or accept the Award, or enter into the Contract;
   c. A price per unit cannot be determined from the Bid Proposal;
   d. The Proposal form is not properly executed;
   e. The Bidder fails to submit or properly complete a subcontractor list (WSDOT Form 271-015), if applicable, as required in Section 1-02.6;
   f. The Bidder fails to submit or properly complete a Disadvantaged Business Enterprise Certification (WSDOT Form 272-056), if applicable, as required in Section 1-02.6;
   g. The Bidder fails to submit Written Confirmations (WSDOT Form 422-031) from each DBE firm listed on the Bidder's completed DBE Utilization Certification that they are in agreement with the bidder's DBE participation commitment, if applicable, as required in Section 1-02.6, or if the written confirmation that is submitted fails to meet the requirements of the Special Provisions;
   h. The Bidder fails to submit DBE Good Faith Effort documentation, if applicable, as required in Section 1-02.6, or if the documentation that is submitted fails to demonstrate that a Good Faith Effort to meet the Condition of Award in accordance with Section 1-07.11;
   i. The Bidder fails to submit a DBE Bid Item Breakdown (WSDOT Form 272-054), if applicable, as required in Section 1-02.6, or if the documentation that is submitted fails to meet the requirements of the Special Provisions;
   j. The Bidder fails to submit the Bidder Questionnaire (DOT Form 272-022), if applicable as required by Section 1-02.6, or if the documentation that is submitted fails to meet the requirements of the Special Provisions; or
   k. The Bid Proposal does not constitute a definite and unqualified offer to meet the material terms of the Bid invitation.

2. A Proposal may be considered irregular and may be rejected if:
   a. The Proposal does not include a unit price for every Bid item;
   b. Any of the unit prices are excessively unbalanced (either above or below the amount of a reasonable Bid) to the potential detriment of the Contracting Agency;
   c. The authorized Proposal Form furnished by the Contracting Agency is not used or is altered;
   d. The completed Proposal form contains unauthorized additions, deletions, alternate Bids, or conditions;
   e. Receipt of Addenda is not acknowledged;
   f. A member of a joint venture or partnership and the joint venture or partnership submit Proposals for the same project (in such an instance, both Bids may be rejected); or
   g. If Proposal form entries are not made in ink.

Provided to Builders Exchange of WA, Inc. For usage Conditions Agreement see www.bxwa.com - Always Verify Scal

(COS GSP)

Supplement this section with the following:

The City specifically reserves the right to reject any and/or all Bids, and to waive minor informalities.

1-02.14 Disqualification of Bidders

(May 17, 2018 APWA GSP, Option B)

Delete this section and replace it with the following:

A Bidder will be deemed not responsible if the Bidder does not meet the mandatory bidder responsibility criteria in RCW 39.04.350(1), as amended; or does not meet Supplemental Criteria 1-7 listed in this Section.

The Contracting Agency will verify that the Bidder meets the mandatory bidder responsibility criteria in RCW 39.04.350(1), and Supplemental Criteria 1-2. Evidence that the Bidder meets Supplemental Criteria 3-7 shall be provided by the Bidder as stated later in this Section.

1. **Delinquent State Taxes**

   A Criterion: The Bidder shall not owe delinquent taxes to the Washington State Department of Revenue without a payment plan approved by the Department of Revenue.

   B. Documentation: The Bidder, if and when required as detailed below, shall sign a statement (on a form to be provided by the Contracting Agency) that the Bidder does not owe delinquent taxes to the Washington State Department of Revenue, or if delinquent taxes are owed to the Washington State Department of Revenue, the Bidder must submit a written payment plan approved by the Department of Revenue, to the Contracting Agency by the deadline listed below.

2. **Federal Debarment**

   A Criterion: The Bidder shall not currently be debarred or suspended by the Federal government.

   B. Documentation: The Bidder shall not be listed as having an "active exclusion" on the U.S. government's "System for Award Management" database (www.sam.gov).

3. **Subcontractor Responsibility**

   A Criterion: The Bidder's standard subcontract form shall include the subcontractor responsibility language required by RCW 39.06.020, and the Bidder shall have an established procedure which it utilizes to validate the responsibility of each of its subcontractors. The Bidder's subcontract form shall also include a requirement that each of its subcontractors shall have and document a similar

Provided to Builders Exchange of WA, Inc. For usage Conditions Agreement see www.bxwa.com - Always Verify Scal

procedure to determine whether the sub-tier subcontractors with whom it contracts are also "responsible" subcontractors as defined by RCW 39.06.020.

B. Documentation: The Bidder, if and when required as detailed below, shall submit a copy of its standard subcontract form for review by the Contracting Agency, and a written description of its procedure for validating the responsibility of subcontractors with which it contracts.

4. **Claims Against Retainage and Bonds**

A Criterion: The Bidder shall not have a record of excessive claims filed against the retainage or payment bonds for public works projects in the three years prior to the bid submittal date, that demonstrate a lack of effective management by the Bidder of making timely and appropriate payments to its subcontractors, suppliers, and workers, unless there are extenuating circumstances and such circumstances are deemed acceptable to the Contracting Agency.

B. Documentation: The Bidder, if and when required as detailed below, shall submit a list of the public works projects completed in the three years prior to the bid submittal date that have had claims against retainage and bonds and include for each project the following information:

- Name of project
- The owner and contact information for the owner;
- A list of claims filed against the retainage and/or payment bond for any of the projects listed;
- A written explanation of the circumstances surrounding each claim and the ultimate resolution of the claim.

5. **Public Bidding Crime**

A Criterion: The Bidder and/or its owners shall not have been convicted of a crime involving bidding on a public works contract in the five years prior to the bid submittal date.

B. Documentation: The Bidder, if and when required as detailed below, shall sign a statement (on a form to be provided by the Contracting Agency) that the Bidder and/or its owners have not been convicted of a crime involving bidding on a public works contract.

6. **Termination for Cause / Termination for Default**

A Criterion: The Bidder shall not have had any public works contract terminated for cause or terminated for default by a government agency in the five years prior to the bid submittal date, unless there are extenuating circumstances and such circumstances are deemed acceptable to the Contracting Agency.

B. Documentation: The Bidder, if and when required as detailed below, shall sign a statement (on a form to be provided by the Contracting Agency) that the Bidder has not had any public works contract terminated for cause or terminated for

Provided to Builders Exchange of WA, Inc. For usage Conditions Agreement see www.bxwa.com - Always Verify Scal

default by a government agency in the five years prior to the bid submittal date; or if Bidder was terminated, describe the circumstances. .

7. **Lawsuits**

A Criterion: The Bidder shall not have lawsuits with judgments entered against the Bidder in the five years prior to the bid submittal date that demonstrate a pattern of failing to meet the terms of contracts, unless there are extenuating circumstances and such circumstances are deemed acceptable to the Contracting Agency

B. Documentation: The Bidder, if and when required as detailed below, shall sign a statement (on a form to be provided by the Contracting Agency) that the Bidder has not had any lawsuits with judgments entered against the Bidder in the five years prior to the bid submittal date that demonstrate a pattern of failing to meet the terms of contracts, or shall submit a list of all lawsuits with judgments entered against the Bidder in the five years prior to the bid submittal date, along with a written explanation of the circumstances surrounding each such lawsuit. The Contracting Agency shall evaluate these explanations to determine whether the lawsuits demonstrate a pattern of failing to meet of terms of construction related contracts

As evidence that the Bidder meets the Supplemental Criteria stated above, the apparent low Bidder must submit to the Contracting Agency by 12:00 P.M. (noon) of the second business day following the bid submittal deadline, a written statement verifying that the Bidder meets the supplemental criteria together with supporting documentation (sufficient in the sole judgment of the Contracting Agency) demonstrating compliance with the Supplemental Criteria. The Contracting Agency reserves the right to request further documentation as needed from the low Bidder and documentation from other Bidders as well to assess Bidder responsibility and compliance with all bidder responsibility criteria. The Contracting Agency also reserves the right to obtain information from third-parties and independent sources of information concerning a Bidder's compliance with the mandatory and supplemental criteria, and to use that information in their evaluation. The Contracting Agency may consider mitigating factors in determining whether the Bidder complies with the requirements of the supplemental criteria.

The basis for evaluation of Bidder compliance with these mandatory and supplemental criteria shall include any documents or facts obtained by Contracting Agency (whether from the Bidder or third parties) including but not limited to: (i) financial, historical, or operational data from the Bidder; (ii) information obtained directly by the Contracting Agency from others for whom the Bidder has worked, or other public agencies or private enterprises; and (iii) any additional information obtained by the Contracting Agency which is believed to be relevant to the matter.

If the Contracting Agency determines the Bidder does not meet the bidder responsibility criteria above and is therefore not a responsible Bidder, the Contracting Agency shall notify the Bidder in writing, with the reasons for its determination. If the Bidder disagrees with this determination, it may appeal the determination within two (2) business days of the Contracting Agency's determination by presenting its appeal and any additional information to the Contracting Agency. The Contracting Agency will consider the appeal and any additional information before issuing its final determination. If the final

Provided to Builders Exchange of WA, Inc. For usage Conditions Agreement see www.bxwa.com - Always Verify Scal

determination affirms that the Bidder is not responsible, the Contracting Agency will not execute a contract with any other Bidder until at least two business days after the Bidder determined to be not responsible has received the Contracting Agency's final determination.

Request to Change Supplemental Bidder Responsibility Criteria Prior To Bid: Bidders with concerns about the relevancy or restrictiveness of the Supplemental Bidder Responsibility Criteria may make or submit requests to the Contracting Agency to modify the criteria. Such requests shall be in writing, describe the nature of the concerns, and propose specific modifications to the criteria. Bidders shall submit such requests to the Contracting Agency no later than five (5) business days prior to the bid submittal deadline and address the request to the Project Engineer or such other person designated by the Contracting Agency in the Bid Documents.

1-02.15 Pre Award Information

(December 30, 2022 APWA GSP)

Revise this section to read:

Before awarding any contract, the Contracting Agency may require one or more of these items or actions of the apparent lowest responsible bidder:

1. A complete statement of the origin, composition, and manufacture of any or all materials to be used,
2. Samples of these materials for quality and fitness tests,
3. A progress schedule (in a form the Contracting Agency requires) showing the order of and time required for the various phases of the work,
4. A breakdown of costs assigned to any bid item,
5. Attendance at a conference with the Engineer or representatives of the Engineer,
6. Obtain, and furnish a copy of, a business license to do business in the city or county where the work is located.
7. Any other information or action taken that is deemed necessary to ensure that the bidder is the lowest responsible bidder.

Provided to Builders Exchange of WA, Inc. For usage Conditions Agreement see www.bxwa.com - Always Verify Scal

1-03 Award and Execution of Contract

1-03.1 Consideration of Bids

(December 30, 2022 APWA GSP)

Revise the first paragraph to read:

After opening and reading proposals, the Contracting Agency will check them for correctness of extensions of the prices per unit and the total price. If a discrepancy exists between the price per unit and the extended amount of any bid item, the price per unit will control. If a minimum bid amount has been established for any item and the bidder's unit or lump sum price is less than the minimum specified amount, the Contracting Agency will unilaterally revise the unit or lump sum price, to the minimum specified amount and recalculate the extension. The total of extensions, corrected where necessary, including sales taxes where applicable and such additives and/or alternates as selected by the Contracting Agency, will be used by the Contracting Agency for award purposes and to fix the Awarded Contract Price amount and the amount of the contract bond.

1-03.2 Award of Contract

(COS GSP)

Section 1-03.2 is supplemented with the following:

The award of contract will be made to the lowest bidder including sales tax deemed responsive and responsible by the City for the bid schedule and whose bid conforms to the requirements of these specifications, and whose past record of performance on work of similar complexity and magnitude indicates that said bidder is qualified to carry out the obligations of the contract and to complete the work contemplated therein. The contracting agency reserves the right to award all work bid according to the lowest qualified responsive and responsible bid tendered, available funds, and as it best serves the interest of the contracting agency.

1-03.3 Execution of Contract

(July 8, 2024 APWA GSP Option A)

Revise this section to read:

Within 3 calendar days of Award date (not including Saturdays, Sundays and Holidays), the successful Bidder shall provide the information necessary to execute the Contract to the Contracting Agency. The Bidder shall send the contact information, including the full name, email address, and phone number, for the authorized signer and bonding agent to the Contracting Agency.

Copies of the Contract Provisions, including the unsigned Form of Contract, will be available for signature by the successful bidder on the first business day following award. The number of copies to be executed by the Contractor will be determined by the Contracting Agency.

Within 10 calendar days after the award date, the successful bidder shall return the signed Contracting Agency-prepared contract, an insurance certification as required by Section 1-07.18, a satisfactory bond as required by law and Section 1-03.4, the Transfer of Coverage

Provided to Builders Exchange of WA, Inc. For usage Conditions Agreement see www.bxwa.com - Always Verify Scal

form for the Construction Stormwater General Permit with sections I, III, and VIII completed when provided. Before execution of the contract by the Contracting Agency, the successful bidder shall provide any pre-award information the Contracting Agency may require under Section 1-02.15.

Until the Contracting Agency executes a contract, no proposal shall bind the Contracting Agency nor shall any work begin within the project limits or within Contracting Agency-furnished sites. The Contractor shall bear all risks for any work begun outside such areas and for any materials ordered before the contract is executed by the Contracting Agency.

If the bidder experiences circumstances beyond their control that prevents return of the contract documents within the calendar days after the award date stated above, the Contracting Agency may grant up to a maximum of 10 additional calendar days for return of the documents, provided the Contracting Agency deems the circumstances warrant it.

1-03.4 Contract Bond

(July 23, 2015 APWA GSP)

Delete the first paragraph and replace it with the following:

The successful bidder shall provide executed payment and performance bond(s) for the full contract amount. The bond may be a combined payment and performance bond; or be separate payment and performance bonds. In the case of separate payment and performance bonds, each shall be for the full contract amount. The bond(s) shall:

1. Be on Contracting Agency-furnished form(s);
2. Be signed by an approved surety (or sureties) that:
   a. Is registered with the Washington State Insurance Commissioner, and
   b. Appears on the current Authorized Insurance List in the State of Washington published by the Office of the Insurance Commissioner,
3. Guarantee that the Contractor will perform and comply with all obligations, duties, and conditions under the Contract, including but not limited to the duty and obligation to indemnify, defend, and protect the Contracting Agency against all losses and claims related directly or indirectly from any failure:
   a. Of the Contractor (or any of the employees, subcontractors, or lower tier subcontractors of the Contractor) to faithfully perform and comply with all contract obligations, conditions, and duties, or
   b. Of the Contractor (or the subcontractors or lower tier subcontractors of the Contractor) to pay all laborers, mechanics, subcontractors, lower tier subcontractors, material person, or any other person who provides supplies or provisions for carrying out the work;
4. Be conditioned upon the payment of taxes, increases, and penalties incurred on the project under titles 50, 51, and 82 RCW; and
5. Be accompanied by a power of attorney for the Surety's officer empowered to sign the bond; and
6. Be signed by an officer of the Contractor empowered to sign official statements (sole proprietor or partner). If the Contractor is a corporation, the bond(s) must be signed by the president or vice president, unless accompanied by written proof of the authority of the individual signing the bond(s) to bind the corporation (i.e., corporate resolution, power of attorney, or a letter to such effect signed by the president or vice president).

Provided to Builders Exchange of WA, Inc. For usage Conditions Agreement see www.bxwa.com - Always Verify Scal

1-03.7 Judicial Review

(December 30, 2022 APWA GSP)

Revise this section to read:

All decisions made by the Contracting Agency regarding the Award and execution of the Contract or Bid rejection shall be conclusive subject to the scope of judicial review permitted under Washington Law. Such review, if any, shall be timely filed in the Superior Court of the county where the Contracting Agency headquarters is located, provided that where an action is asserted against a county, RCW 36.01.050 shall control venue and jurisdiction.

1-04 Scope of the Work

1-04.1 Intent of the Contract

(COS GSP)

Section 1-04.1 is supplemented with the following:

All materials, tools, labor, and guarantees thereof of required to complete the work shall be furnished and supplied in accordance with the Plans, these Special Provisions, the Standard Specifications, and City of Stanwood Standard Details. The Contractor shall include all costs of doing this work within the contract bid item prices.

1-04.2 Coordination of Contract Documents, Plans, Special Provisions, Specifications, and Addenda

(December 30, 2022 APWA GSP)

Revise the second paragraph to read:

Any inconsistency in the parts of the contract shall be resolved by following this order of precedence (e.g., 1 presiding over 2, 2 over 3, 3 over 4, and so forth):

1. Addenda,
2. Proposal Form,
3. Special Provisions,
4. Contract Plans,
5. Standard Specifications,
6. Contracting Agency's Standard Plans or Details (if any), and
7. WSDOT Standard Plans for Road, Bridge, and Municipal Construction.

1-04.4 Minor Changes

(January 19, 2022 APWA GSP)

The first two sentences of the last paragraph of Section 1-04.4 are deleted.

1-04.4(1) Minor Changes

(May 30, 2019 APWA GSP)

Delete the first paragraph and replace it with the following:

Provided to Builders Exchange of WA, Inc. For usage Conditions Agreement see www.bxwa.com - Always Verify Scal

Payments or credits for changes amounting to $15,000 or less may be made under the Bid item "Minor Change". At the discretion of the Contracting Agency, this procedure for Minor Changes may be used in lieu of the more formal procedure as outlined in Section 1-04.4, Changes. All "Minor Change" work will be within the scope of the Contract Work and will not change Contract Time.

1-04.6 Variation in Estimated Quantities

(December 30, 2022 APWA GSP Option B)

Revise the first paragraph to read:

> Payment to the Contractor will be made only for the actual quantities of Work performed and accepted in conformance with the Contract. When the accepted quantity of Work performed under a unit item varies from the original Proposal quantity, payment will be at the unit Contract price for all Work unless the total accepted quantity of the Contract item, adjusted to exclude added or deleted amounts included in change orders accepted by both parties, increases or decreases by more than 25 percent from the original Proposal quantity, and if the total extended bid price for that item at time of award is equal to or greater than 10 percent of the total contract price at time of award. In that case, payment for contract work may be adjusted as described herein:

1-04.11 Final Cleanup

(COS GSP)

Section 1-04.11 is deleted in its entirety and replaced with the following:

> From time to time or as may be ordered by the Engineer, the Contractor shall cleanup and remove debris, refuse, and discarded materials of any kind resulting from the Work. Failure to do so may result in cleanup done by the Owner and the cost thereof charged to the Contractor and deducted from the Contractor's progress estimate.
>
> The Contractor shall perform final cleanup as provided in this Section. The Engineer will not establish the Physical Completion Date until this is done. All public and private property the Contractor occupied to do the Work, including but not limited to the Street Right of Way, material sites, borrow and waste sites, and construction staging area shall be left neat and presentable. Immediately after completion of the Work, the Contractor shall cleanup and remove all refuse and unused materials of any kind resulting from the Work. Failure to do the final cleanup may result in the final cleanup being done by the Owner and the cost thereof charged to the Contractor and deducted from the Contractor's final progress estimate.
>
> The Contractor shall:
>
> 1. Remove all rubbish, surplus materials, discarded materials, falsework, piling, camp buildings, temporary structures, equipment, and debris;
> 2. Remove from the Project, all unneeded, oversized rock left from grading, surfacing, or paving unless the Contract specifies otherwise, or the Engineer approves otherwise;
> 3. On all concrete and asphalt pavement work, flush the pavement clean and remove the wash water and debris;

Provided to Builders Exchange of WA, Inc. For usage Conditions Agreement see www.bxwa.com - Always Verify Scal

4. Sweep and flush structure decks and remove wash water and debris;
5. Clean out from all open culverts and drains, inlets, catch basins, manholes and water main valve chambers, within the limits of the Project Site, all dirt and debris of any kind that is the result of the Contractor's operations;
6. Level and fine grade all excavated material not used for backfill where the Contract requires;
7. Fine grade all slopes;
8. Upon completion of grading and cleanup operations at any privately-owned site for which a written agreement between the Contractor and property owner is required, the Contractor shall obtain and furnish to the Engineer a written release from all damages, duly executed by the property owner, stating that the restoration of the property has been satisfactorily accomplished.

All costs associated with cleanup shall be incidental to the Work and shall be included in the various Bid items in the Bid, and shall be at no additional cost to the Owner.

1-05 Control of Work

1-05.4 Conformity With And Deviations From Plans And Stakes

Section 1-05.4 is supplemented with the following:

(January 13, 2021 WSDOT GSP)

Contractor Surveying - Roadway

The Contracting Agency has provided primary survey control in the Plans.

The Contractor shall be responsible for setting, maintaining, and resetting all alignment stakes, slope stakes, and grades necessary for the construction of the roadbed, drainage, surfacing, paving, channelization and pavement marking, illumination and signals, guardrails and barriers, and signing. Except for the survey control data to be furnished by the Contracting Agency, calculations, surveying, and measuring required for setting and maintaining the necessary lines and grades shall be the Contractor's responsibility.

The Contractor shall inform the Engineer when monuments are discovered that were not identified in the Plans and construction activity may disturb or damage the monuments. All monuments noted on the plans “DO NOT DISTURB” shall be protected throughout the length of the project or be replaced at the Contractors expense.

Detailed survey records shall be maintained, including a description of the work performed on each shift, the methods utilized, and the control points used. The record shall be adequate to allow the survey to be reproduced. A copy of each day's record shall be provided to the Engineer within three working days after the end of the shift.

The meaning of words and terms used in this provision shall be as listed in "Definitions of Surveying and Associated Terms" current edition, published by the American Congress on Surveying and Mapping and the American Society of Civil Engineers.

The survey work shall include but not be limited to the following:

1. Verify the primary horizontal and vertical control furnished by the Contracting Agency, and expand into secondary control by adding stakes and hubs as well as additional survey control needed for the project. Provide descriptions of secondary

Provided to Builders Exchange of WA, Inc. For usage Conditions Agreement see www.bxwa.com - Always Verify Scal

control to the Contracting Agency. The description shall include coordinates and elevations of all secondary control points.

2. Establish, the centerlines of all alignments, by placing hubs, stakes, or marks on centerline or on offsets to centerline at all curve points (PCs, PTs, and PIs) and at points on the alignments spaced no further than 50 feet.

3. Establish clearing limits, placing stakes at all angle points and at intermediate points not more than 50 feet apart. The clearing and grubbing limits shall be 5 feet beyond the toe of a fill and 10 feet beyond the top of a cut unless otherwise shown in the Plans.

4. Establish grading limits, placing slope stakes at centerline increments not more than 50 feet apart. Establish offset reference to all slope stakes. If Global Positioning Satellite (GPS) Machine Controls are used to provide grade control, then slope stakes may be omitted at the discretion of the Contractor

5. Establish the horizontal and vertical location of all drainage features, placing offset stakes to all drainage structures and to pipes at a horizontal interval not greater than 25 feet.

6. Establish roadbed and surfacing elevations by placing stakes at the top of subgrade and at the top of each course of surfacing. Subgrade and surfacing stakes shall be set at horizontal intervals not greater than 50 feet in tangent sections, 25 feet in curve sections with a radius less than 300 feet, and at 10-foot intervals in intersection radii with a radius less than 10 feet. Transversely, stakes shall be placed at all locations where the roadway slope changes and at additional points such that the transverse spacing of stakes is not more than 12 feet. If GPS Machine Controls are used to provide grade control, then roadbed and surfacing stakes may be omitted at the discretion of the Contractor.

7. Establish intermediate elevation benchmarks as needed to check work throughout the project.

8. Provide references for paving pins at 25-foot intervals or provide simultaneous surveying to establish location and elevation of paving pins as they are being placed.

9. For all other types of construction included in this provision, (including but not limited to channelization and pavement marking, illumination and signals, guardrails and barriers, and signing) provide staking and layout as necessary to adequately locate, construct, and check the specific construction activity.

10. Contractor shall determine if changes are needed to the profiles or roadway sections shown in the Contract Plans in order to achieve proper smoothness and drainage where matching into existing features, such as a smooth transition from new pavement to existing pavement. The Contractor shall submit these changes to the Engineer for review and approval 10 days prior to the beginning of work.

The Contractor shall provide the Contracting Agency copies of any calculations and staking data when requested by the Engineer.

Provided to Builders Exchange of WA, Inc. For usage Conditions Agreement see www.bxwa.com - Always Verify Scal

The Contractor shall ensure a surveying accuracy within the following tolerances:

	Vertical	Horizontal
Slope stakes	±0.10 feet	±0.10 feet
Subgrade grade stakes set 0.04 feet below grade	±0.01 feet	±0.5 feet (parallel to alignment) ±0.1 feet (normal to alignment)
Stationing on roadway	N/A	±0.1 feet
Alignment on roadway	N/A	±0.04 feet
Surfacing grade stakes	±0.01 feet	±0.5 feet (parallel to alignment) ±0.1 feet (normal to alignment)
Roadway paving pins for surfacing or paving	±0.01 feet	±0.2 feet (parallel to alignment) ±0.1 feet (normal to alignment)

The Contracting Agency may spot-check the Contractor's surveying. These spot-checks will not change the requirements for normal checking by the Contractor.

When staking roadway alignment and stationing, the Contractor shall perform independent checks from different secondary control to ensure that the points staked are within the specified survey accuracy tolerances.

The Contractor shall calculate coordinates for the alignment. The Contracting Agency will verify these coordinates prior to issuing approval to the Contractor for commencing with the work. The Contracting Agency will require up to seven calendar days from the date the data is received.

Contract work to be performed using contractor-provided stakes shall not begin until the stakes are approved by the Contracting Agency. Such approval shall not relieve the Contractor of responsibility for the accuracy of the stakes.

Stakes shall be marked in accordance with Standard Plan A10.10. When stakes are needed that are not described in the Plans, then those stakes shall be marked, at no additional cost to the Contracting Agency as ordered by the Engineer.

Payment

Payment will be made for the following bid item when included in the proposal:

"Roadway Surveying", lump sum.

The lump sum contract price for "Roadway Surveying" shall be full pay for all labor, equipment, materials, and supervision utilized to perform the Work specified, including any

Provided to Builders Exchange of WA, Inc. For usage Conditions Agreement see www.bxwa.com - Always Verify Scal

resurveying, checking, correction of errors, replacement of missing or damaged stakes, and coordination efforts.

1-05.7 Removal of Defective and Unauthorized Work

Section 1-05.7, including title and subsections, is deleted and replaced with the following:

(November 4, 2024 WSDOT GSP)

Nonconforming Work

The Contracting Agency will not pay for Nonconforming Work.

Nonconforming Work is Work that in any way fails to meet the requirements of the Contract. This includes, but is not limited to:

- Work that does not conform to Contract requirements
- Work that does not meet Contract requirements
- Work done beyond the lines and grades set by the Plans or the Engineer
- Extra Work and materials furnished without the Engineer's written approval
- Defective Work
- Noncompliant Work
- Nonconforming Work
- Out of specification Work
- Rejected Work
- Unacceptable Work
- Unauthorized Work
- Unsuitable Work
- Unsatisfactory Work

Identification of Nonconforming Work

The Contractor is responsible for quality control and shall identify all Nonconforming Work. The Contracting Agency may also identify Nonconforming Work during inspection of Work that has been completed, is at an identified hold point, or has been identified by the Contractor as ready for inspection. However, failure by the Contracting Agency to identify Nonconforming Work shall not relieve the Contractor from their responsibility for the quality of the Work, nor shall it constitute acceptance or approval of the Nonconforming Work.

Provided to Builders Exchange of WA, Inc. For usage Conditions Agreement see www.bxwa.com - Always Verify Scal

Reporting of Nonconforming Work

Unless otherwise specified, the Contractor shall immediately report all Nonconforming Work to the Engineer along with any relevant information about how the Nonconforming Work shall be remediated. The Contractor shall be responsible and bear all costs for remediating Nonconforming Work.

If the Contract requires the use of the WSDOT Unifier system for Document Control in accordance with Section 1-04.2, reporting and remediation submittals shall follow the "Nonconformance Report" business process in Unifier.

Remediation of Nonconforming Work

Remediation to correct Nonconforming Work shall be completed as soon as possible. However, unless otherwise specified, the Contractor shall not proceed with implementing the remedy until the Engineer has accepted the Contractor's proposed remedy. Any remedial work done prior to the Engineer's acceptance shall be at the Contractor's sole risk and will be subject to further rejection or remediation. The Engineer has the right to reject all or part of the Nonconforming Work, and the Engineer's decision is final and not subject to protest.

Remediation shall be classified in one of the following categories:

1. Rework to Contract requirements

2. Remove and replace

3. Repair to acceptable standards

When disputes occur over which category a remedy belongs, the Engineer's decision will be final and binding.

Rework to Contract Requirements

To be considered rework, the design and construction standards of the proposed completed Work, in the sole judgment of the Engineer, shall meet the design and construction standards applicable to the project.

Reporting of Nonconforming Work that is reworked is not required if all of the following conditions are met:

1. The remediation shall be completed in the same shift as the Nonconforming Work was identified.

2. It shall be remedied without damaging other Work.

3. It shall be remedied without putting the public at risk.

4. The Contractor's proposed remedy is in accordance with the Contract requirements.

5. The Engineer does not request the Nonconforming Work be reported.

Examples of Nonconforming Work that may not need reported if reworked include:

Provided to Builders Exchange of WA, Inc. For usage Conditions Agreement see www.bxwa.com - Always Verify Scal

- Missing dobies prior to concrete pouring
- Rebar spacing and missing rebar
- Out of plumb luminaire or sign pole/post

For all other rework the Contractor shall submit all relevant information to the Engineer. The Contractor shall include Type 2 Working Drawings. The Type 2 Working Drawings shall explain how the nonconforming work will be reworked including repairs that will achieve the Contract requirements. For preapproved repair procedures, Type 1 Working drawings shall be included in lieu of the Type 2 Working Drawings.

Remove and Replace

To be considered as remove and replace, the Nonconforming Work shall be removed and replaced and the design and construction standards of the proposed completed Work, in the sole judgment of the Engineer, shall meet the design and construction standards applicable to the project.

Reporting of Nonconforming Work that is removed and replaced is not required if all of the following conditions are met:

1. The remedy shall be completed in the same shift the Nonconforming Work was identified.
2. It shall be removed and replaced without damaging other Work.
3. Both the removal and the replacement meet all Contract requirements.
4. The Engineer does not request the Nonconforming Work be reported.

Examples of Nonconforming Work that may not need reported if removed and replaced include:

- Decompacting and recompacting a lift of embankment to meet compaction requirements
- Removing and replacing an installed and dented luminaire pole with a new one.

For all other remove and replace Work, the Contractor shall submit all relevant information, including Working Drawings of the Type requested by the Engineer.

The Working Drawings shall include how the nonconforming Work will be removed and replaced including protection of other Work if needed. Type 2 Working Drawings shall be required, unless the remediation requires engineering, in which case, Type 2E Working Drawings shall be provided.

Repair to an Acceptable Standard

At the Contractor's written request, the Engineer may approve remediation that includes repairing to an acceptable standard that does not meet the Contract requirements with an appropriate price reduction that may range from no reduction to no payment.

Provided to Builders Exchange of WA, Inc. For usage Conditions Agreement see www.bxwa.com - Always Verify Scal

To request to repair Nonconforming work to an acceptable standard, the Contractor shall submit all relevant information. Remedies proposed for this category shall include Type 2E Working Drawings. The Type 2E working drawings shall indicate whether the Work, as repaired, will achieve the same load carrying capacity, and shall assess the effects of the repair on the durability of the Work. Calculations shall be provided to demonstrate that the Work, as repaired, will perform the intended functions for its intended design life.

(October 1, 2005 APWA GSP)

Supplement this section with the following:

If the Contractor fails to remedy defective or unauthorized work within the time specified in a written notice from the Engineer, or fails to perform any part of the work required by the Contract Documents, the Engineer may correct and remedy such work as may be identified in the written notice, with Contracting Agency forces or by such other means as the Contracting Agency may deem necessary.

If the Contractor fails to comply with a written order to remedy what the Engineer determines to be an emergency situation, the Engineer may have the defective and unauthorized work corrected immediately, have the rejected work removed and replaced, or have work the Contractor refuses to perform completed by using Contracting Agency or other forces. An emergency situation is any situation when, in the opinion of the Engineer, a delay in its remedy could be potentially unsafe, or might cause serious risk of loss or damage to the public.

Direct or indirect costs incurred by the Contracting Agency attributable to correcting and remedying defective or unauthorized work, or work the Contractor failed or refused to perform, shall be paid by the Contractor. Payment will be deducted by the Engineer from monies due, or to become due, the Contractor. Such direct and indirect costs shall include in particular, but without limitation, compensation for additional professional services required, and costs for repair and replacement of work of others destroyed or damaged by correction, removal, or replacement of the Contractor's unauthorized work.

No adjustment in contract time or compensation will be allowed because of the delay in the performance of the work attributable to the exercise of the Contracting Agency's rights provided by this Section.

The rights exercised under the provisions of this section shall not diminish the Contracting Agency's right to pursue any other avenue for additional remedy or damages with respect to the Contractor's failure to perform the work as required.

1-05.9 Equipment

(COS GSP)

The following new paragraph is inserted between the second and third paragraphs:

Use of equipment with metal tracks will not be permitted on concrete or asphalt surfaces unless otherwise authorized by the Engineer.

1-05.10 Guarantees

Provided to Builders Exchange of WA, Inc. For usage Conditions Agreement see www.bxwa.com - Always Verify Scal

(COS GSP)

Section 1-05.10 is supplemented as follows:

Guarantees and maintenance bonds shall be in accordance with City of Stanwood, State of Washington, Public Works Performance and Payment Bond forms and requirements. The performance bond shall be in the full amount of contract. The Contractor guarantees all items of material, equipment, and workmanship against mechanical, structural, or other defects for which the Contractor is responsible that may develop or become evident within a period of one year from and after acceptance of the work by the Owner. This guarantee shall be understood to require prompt remedy of defects upon written notification to the Contractor. If the Owner determines the defect requires immediate repair, the Owner may, without further notice to the Contractor, make the necessary corrections, the cost of which shall be borne by the Contractor. To support the above guarantee, the Contractor's performance bond shall remain in full force and effect for one year following the acceptance of the project by the Owner.

1-05.11 Final Inspection

Delete this section and replace it with the following:

1-05.11 Final Inspections and Operational Testing

(October 1, 2005 APWA GSP)

1-05.11(1) Substantial Completion Date

When the Contractor considers the work to be substantially complete, the Contractor shall so notify the Engineer and request the Engineer establish the Substantial Completion Date. The Contractor's request shall list the specific items of work that remain to be completed in order to reach physical completion. The Engineer will schedule an inspection of the work with the Contractor to determine the status of completion. The Engineer may also establish the Substantial Completion Date unilaterally.

If, after this inspection, the Engineer concurs with the Contractor that the work is substantially complete and ready for its intended use, the Engineer, by written notice to the Contractor, will set the Substantial Completion Date. If, after this inspection the Engineer does not consider the work substantially complete and ready for its intended use, the Engineer will, by written notice, so notify the Contractor giving the reasons therefor.

Upon receipt of written notice concurring in or denying substantial completion, whichever is applicable, the Contractor shall pursue vigorously, diligently and without unauthorized interruption, the work necessary to reach Substantial and Physical Completion. The Contractor shall provide the Engineer with a revised schedule indicating when the Contractor expects to reach substantial and physical completion of the work.

The above process shall be repeated until the Engineer establishes the Substantial Completion Date and the Contractor considers the work physically complete and ready for final inspection.

Provided to Builders Exchange of WA, Inc. For usage Conditions Agreement see www.bxwa.com - Always Verify Scal

1-05.11(2) Final Inspection and Physical Completion Date

When the Contractor considers the work physically complete and ready for final inspection, the Contractor by written notice, shall request the Engineer to schedule a final inspection. The Engineer will set a date for final inspection. The Engineer and the Contractor will then make a final inspection and the Engineer will notify the Contractor in writing of all particulars in which the final inspection reveals the work incomplete or unacceptable. The Contractor shall immediately take such corrective measures as are necessary to remedy the listed deficiencies. Corrective work shall be pursued vigorously, diligently, and without interruption until physical completion of the listed deficiencies. This process will continue until the Engineer is satisfied the listed deficiencies have been corrected.

If action to correct the listed deficiencies is not initiated within 7 days after receipt of the written notice listing the deficiencies, the Engineer may, upon written notice to the Contractor, take whatever steps are necessary to correct those deficiencies pursuant to Section 1-05.7. The Contractor will not be allowed an extension of contract time because of a delay in the performance of the work attributable to the exercise of the Engineer's right hereunder.

Upon correction of all deficiencies, the Engineer will notify the Contractor and the Contracting Agency, in writing, of the date upon which the work was considered physically complete. That date shall constitute the Physical Completion Date of the contract, but shall not imply acceptance of the work or that all the obligations of the Contractor under the contract have been fulfilled.

1-05.11(3) Operational Testing

It is the intent of the Contracting Agency to have at the Physical Completion Date a complete and operable system. Therefore when the work involves the installation of machinery or other mechanical equipment; street lighting, electrical distribution or signal systems; irrigation systems; buildings; or other similar work it may be desirable for the Engineer to have the Contractor operate and test the work for a period of time after final inspection but prior to the physical completion date. Whenever items of work are listed in the Contract Provisions for operational testing they shall be fully tested under operating conditions for the time period specified to ensure their acceptability prior to the Physical Completion Date. During and following the test period, the Contractor shall correct any items of workmanship, materials, or equipment which prove faulty, or that are not in first class operating condition. Equipment, electrical controls, meters, or other devices and equipment to be tested during this period shall be tested under the observation of the Engineer, so that the Engineer may determine their suitability for the purpose for which they were installed. The Physical Completion Date cannot be established until testing and corrections have been completed to the satisfaction of the Engineer.

The costs for power, gas, labor, material, supplies, and everything else needed to successfully complete operational testing, shall be included in the unit contract prices related to the system being tested, unless specifically set forth otherwise in the proposal.

Operational and test periods, when required by the Engineer, shall not affect a manufacturer's guaranties or warranties furnished under the terms of the contract.

Provided to Builders Exchange of WA, Inc. For usage Conditions Agreement see www.bxwa.com - Always Verify Scal

1-05.12 Final Acceptance

Add the following new section:

1-05.12(1) One-Year Guarantee Period

(March 8, 2013 APWA GSP)

The Contractor shall return to the project and repair or replace all defects in workmanship and material discovered within one year after Final Acceptance of the Work. The Contractor shall start work to remedy any such defects within 7 calendar days of receiving Contracting Agency's written notice of a defect, and shall complete such work within the time stated in the Contracting Agency's notice. In case of an emergency, where damage may result from delay or where loss of services may result, such corrections may be made by the Contracting Agency's own forces or another contractor, in which case the cost of corrections shall be paid by the Contractor. In the event the Contractor does not accomplish corrections within the time specified, the work will be otherwise accomplished and the cost of same shall be paid by the Contractor.

When corrections of defects are made, the Contractor shall then be responsible for correcting all defects in workmanship and materials in the corrected work for one year after acceptance of the corrections by Contracting Agency.

This guarantee is supplemental to and does not limit or affect the requirements that the Contractor's work comply with the requirements of the Contract or any other legal rights or remedies of the Contracting Agency.

1-05.13 Superintendents, Labor and Equipment of Contractor

(August 14, 2013 APWA GSP)

Delete the sixth and seventh paragraphs of this section.

1-05.15 Method of Serving Notices

(January 4, 2024 APWA GSP)

Revise the second paragraph to read:

All correspondence from the Contractor shall be served and directed to the Engineer. All correspondence from the Contractor constituting any notification, notice of protest, notice of dispute, or other correspondence constituting notification required to be furnished under the Contract, must be written in paper format, hand delivered or sent via certified mail delivery service with return receipt requested to the Engineer's office. Electronic copies such as e-mails or electronically delivered copies of correspondence will not constitute such notice and will not comply with the requirements of the Contract.

Provided to Builders Exchange of WA, Inc. For usage Conditions Agreement see www.bxwa.com - Always Verify Scal

Add the following new section:

1-05.16 Water and Power

(October 1, 2005 APWA GSP)

The Contractor shall make necessary arrangements, and shall bear the costs for power and water necessary for the performance of the work, unless the contract includes power and water as a pay item.

Add the following new section:

1-05.18 Record Drawings

(March 8, 2013 APWA GSP)

The Contractor shall maintain one set of full size plans for Record Drawings, updated with clear and accurate red-lined field revisions on a daily basis, and within 2 business days after receipt of information that a change in Work has occurred. The Contractor shall not conceal any work until the required information is recorded.

This Record Drawing set shall be used for this purpose alone, shall be kept separate from other Plan sheets, and shall be clearly marked as Record Drawings. These Record Drawings shall be kept on site at the Contractor's field office, and shall be available for review by the Contracting Agency at all times. The Contractor shall bring the Record Drawings to each progress meeting for review.

The preparation and upkeep of the Record Drawings is to be the assigned responsibility of a single, experienced, and qualified individual. The quality of the Record Drawings, in terms of accuracy, clarity, and completeness, is to be adequate to allow the Contracting Agency to modify the computer-aided drafting (CAD) Contract Drawings to produce a complete set of Record Drawings for the Contracting Agency without further investigative effort by the Contracting Agency.

The Record Drawing markups shall document all changes in the Work, both concealed and visible. Items that must be shown on the markups include but are not limited to:

- Actual dimensions, arrangement, and materials used when different than shown in the Plans.
- Changes made by Change Order or Field Order.
- Changes made by the Contractor.
- Accurate locations of storm sewer, sanitary sewer, water mains and other water appurtenances, structures, conduits, light standards, vaults, width of roadways, sidewalks, landscaping areas, building footprints, channelization and pavement markings, etc. Include pipe invert elevations, top of castings (manholes, inlets, etc.).

If the Contract calls for the Contracting Agency to do all surveying and staking, the Contracting Agency will provide the elevations at the tolerances the Contracting Agency requires for the Record Drawings.

Provided to Builders Exchange of WA, Inc. For usage Conditions Agreement see www.bxwa.com - Always Verify Scal

When the Contract calls for the Contractor to do the surveying/staking, the applicable tolerance limits include, but are not limited to the following:

	Vertical	Horizontal
As-built sanitary & storm invert and grate elevations	± 0.01 foot	± 0.01 foot
As-built monumentation	± 0.001 foot	± 0.001 foot
As-built waterlines, inverts, valves, hydrants	± 0.10 foot	± 0.10 foot
As-built ponds/swales/water features	± 0.10 foot	± 0.10 foot
As-built buildings (fin. Floor elev.)	± 0.01 foot	± 0.10 foot
As-built gas lines, power, TV, Tel, Com	± 0.10 foot	± 0.10 foot
As-built signs, signals, etc.	N/A	± 0.10 foot

Making Entries on the Record Drawings:

- Use erasable colored pencil (not ink) for all markings on the Record Drawings, conforming to the following color code:
- Additions - Red
- Deletions - Green
- Comments - Blue
- Dimensions- Graphite
- Provide the applicable reference for all entries, such as the change order number, the request for information (RFI) number, or the approved shop drawing number.
- Date all entries.
- Clearly identify all items in the entry with notes similar to those in the Contract Drawings (such as pipe symbols, centerline elevations, materials, pipe joint abbreviations, etc.).

The Contractor shall certify on the Record Drawings that said drawings are an accurate depiction of built conditions, and in conformance with the requirements detailed above. The Contractor shall submit final Record Drawings to the Contracting Agency. Contracting Agency acceptance of the Record Drawings is one of the requirements for achieving Physical Completion.

Payment will be made for the following bid item:

Record Drawings (Minimum Bid $1,000)	Lump Sum

Payment for this item will be made on a prorated monthly basis for work completed in accordance with this section up to 75% of the lump sum bid. The final 25% of the lump sum item will be paid upon submittal and approval of the completed Record Drawings set prepared in conformance with these Special Provisions.

A minimum bid amount has been entered in the Bid Proposal for this item. The Contractor must bid at least that amount.

Provided to Builders Exchange of WA, Inc. For usage Conditions Agreement see www.bxwa.com - Always Verify Scal

1-06 Control of Material

1-06.1 Approval of Materials Prior to Use

(COS GSP)

Section 1-06.1 is supplemented with the following:

Approval of a Material source shall not mean acceptance of the Material. The Material shall meet the requirements of the Contract.

1-06.1(4) Fabrication Inspection Expense

(June 27, 2011 AWPA GSP)

Delete this section in its entirety.

1-06.2 Acceptance of Materials

1-06.2(1) Samples and Tests for Acceptance

(*COS GSP)*

Supplement this Section with the following:

1-06.2(1)A General

The work specified in this Section includes the control tests, test sample collection, required field-testing, and special inspections as specified herein, and indicated on the Plans.

All testing as required by this Section shall be paid for by the Contractor. All costs to prepare and implement the sample and testing program shall be included in the bid prices for the various items associated with the sampling and testing program.

Retesting and reinspection required because of defective work and testing performed for the convenience of the Contractor shall also be paid for by the Contractor.

Testing requirements shall not be cause for claims of delay by the Contractor and all expenses accruing there from shall be deemed incidental to the performance of the Contract. The Contractor shall be responsible for all material testing specified in the Contract Documents and any applicable permits and codes. The materials testing laboratory shall be accredited for performing the various testing methods either by AASHTO R18, AASHTO, 150/IEC 17025 or the American Association for Laboratory Accreditation and further approved by the City. The materials testing laboratory shall send test results directly to the Engineer.

1-06.2(1)B Test Methods

Earthwork and Materials

<u>Compaction Control</u>

Optimum moisture content and maximum density tests shall be determined by the following method:

ASTM D1557 – Laboratory Compaction Characteristics of Soil Using Modified Effort

Provided to Builders Exchange of WA, Inc. For usage Conditions Agreement see www.bxwa.com - Always Verify Scal

In-Place Tests

In-place density and moisture content tests shall be made by an independent testing laboratory according to the following messages:

ASTM D693 – Standard Test Method for In-Place Density and Water Content of Soil and Soil-Aggregate by Nuclear Methods (Shallow Depth).

Aggregates

All aggregates shall be tested in accordance with applicable WSDOT test include:

Title	Test Method
Sampling	AASHTO T2
Sieve Analysis of Fine and Coarse Aggregates	104A
Material Finer than No. 200 Sieve Aggregates	102A
Percentage of Particles Smaller than 0.025 mm and 0.005 mm	603A
Organic Impurities	111A
Abrasion of Coarse Aggregates by Use of the Los Angeles Machine	101A
Sand Equivalent	109A

Cast-In-Place Concrete

Cast-in-place concrete shall be tested in accordance with applicable parts of Chapter 16 of ACI 301. Concrete reinforcement and concrete special instructions shall be performed in accordance with local Building Official and WABO requirements.

Hot Mix Asphalt

Paving asphalt shall be tested in accordance with the following WSDOT test methods:

Characteristics	Test Method
Tests on Residue from RTFC Procedure	208
Absolute Viscosity at 140 degrees F, poise	203
Kinematic Viscosity at 275 degrees F, cSt, min.	202
Penetration at 77 degrees F, 100g/5 sec., min.[1]	201
Percent of Original Penetration at 77 degrees F, min.	2
Ductibility at 45 degrees F, cm, min.	
Flashpoint, (Cleveland Open Cup), degrees F min. (test on original asphalt)	206
Solubility in Tricholoroethylene percent, min. (test on original asphalt)	214

[1] Original penetration, as well as penetration after KTFC loss shall be determined by AASHTO Test Method T 49.

Complete Extractive of Uncompacted Mix

Test Methods shall be in accordance with the following:

1. AASHTO T68
2. ASTM D2172
3. AASHTO T30

Density of Compacted Mix

Test method shall be in accordance with AASHTO T166.

Provided to Builders Exchange of WA, Inc. For usage Conditions Agreement see www.bxwa.com - Always Verify Scal

1. The Contractor shall employ an independent testing laboratory approved by the City to conduct complete extraction tests on the uncompacted asphalt concrete pavement mix.

2. The Contractor shall provide the Engineer with an affidavit from the asphalt supplier of the characteristics of the paving asphalt. The paving asphalt shall be tested in accordance with WSDOT Construction Manual and Standard Specifications, latest editions.

1-06.2(1)C Sampling and Testing Frequency

The Contractor shall provide the following quality control tests at the number and frequency described herein. On-site testing technicians and testing laboratories shall be WABO-certified. The precise location of the tests shall be designated by the Engineer. The Contractor shall cooperate with laboratory personnel employed to conduct the density testing, sampling of material(s), and special inspections. The Contractor shall provide safe access within the work site for laboratory personnel such that density testing and visual inspection can be performed. The Contractor shall provide samples of materials to be tested in the quantities required and herein specified to the appropriate laboratory personnel. The Contractor shall furnish all labor, equipment, tools, and materials necessary to obtain and deliver samples as herein designated. The Contractor shall also provide and repair any test holes required in order to facilitate the testing and sampling and to provide for the testing laboratory's exclusive use for storage and curing of test samples until removed to the laboratory.

Any areas tested and further failing compliance with the Specifications shall be recompacted and retested at the Contractor's expense, until a successful density test indicating compliance with these Specifications has been achieved.

Soil Testing

The following soil quality control tests shall be completed at the given frequency:

Material	Test	Minimum Sampling & Testing Frequency
Backfill for foundations, walls, trenches and roads	Gradation[1]	One for each type of fill material with quantities exceeding 25 cy.
	In-Place Density[2, 3, 4]	One every 250 cy or one per day for each type of soil or fill material with quantities exceeding 25 cy. For trenches, one per day and one every 250 feet of trench.
	Moisture-Density Relationship[3]	One prior to start of backfilling operation, one every 20 densities and any time material type changes.
Pipe Bedding	Gradation[1]	One – Certification may be substituted for WSDOT-approved stackpiles.
Subgrade and Fills	In-Place Density[2, 3]	One every 250 cy of each type material.
	Moisture-Density Relationship	One for every 20 densities for each material
	Gradation	One for every moisture-density

Provided to Builders Exchange of WA, Inc. For usage Conditions Agreement see www.bxwa.com - Always Verify Scal

[1] All acceptance tests shall be conducted from in-place samples.
[2] Additional tests shall be conducted when variations occur due to the Contractors, operations, weather conditions, site conditions, etc.
[3] The nuclear densometer, if properly calibrated, may be used but only to supplement the required testing frequency and procedures. The densometer shall be calibrated and is recommended for use when the time for complete results becomes critical.
[4] Depending on soil conditions, it is anticipated that compaction tests shall be required at depths of 2 feet above the pipe and at each additional 5 feet to the existing surface plus a test at the surface.

Hot Mix Asphalt

The following hot mix asphalt quality control tests shall be completed at the given frequency:

Material	Test	Minimum Sampling & Testing Frequency
Mix Design (By Contractor)	Submittal	Design Mix (include test results). Aggregate (each size) – 100 pounds. Asphalt – 1 gallon. Mineral Filler – 10 pounds
Asphalt (including prime and tack coat)	Sample and Tests	Submit material certifications with test results for each shipment or lot of asphalt.
Aggregates (from bins or source)	Gradation	Submit material certifications with test results for each shipment or lot of asphalt.
	Featured Faces	Same as gradation
	L.A. Abrasion	Same as gradation
	Specific Gravity	Same as gradation
Hot Mix Asphalt (including Asphalt Treated Base)	Marshall Method Test	One initial test during mix design and one per 3,000 tons thereafter.
	Specific Gravity	One per each Marshall test.
	Compaction	One per 50 Tons with not less than two per day.

Concrete

All testing shall conform to applicable portions of ACI. Special inspections of concrete and concrete reinforcement shall comply with WABO requirements.

All concrete must meet the specified requirements for minimum 28-day compressive strength.

All concrete cylinders shall be molded and tested for strength by an independent testing laboratory employed by the Contractor.

The Contractor shall furnish all concrete required for molding of the cylinders. In cases where cylinders are stored at the project site, the Contractor shall provide storage and protection for the cylinders in accordance with ACI requirements.

Concrete tests and testing frequency shall be in accordance with the more stringent of the testing requirements specified in Section 03300-3.17 of these Specifications, and the following table:

Provided to Builders Exchange of WA, Inc. For usage Conditions Agreement see www.bxwa.com - Always Verify Scal

Material	Test	Minimum Sampling & Testing Frequency
Coarse Aggregate (for each grading size)[1]	Gradation	Submit material certifications with test results for each shipment or lot of asphalt.
	Deleterious Substances	Same as gradation.
	L.A. Abrasion	Same as gradation.
	Moisture specific gravity and absorption[1]	One initially and every 250 cy thereafter. One moisture to be conducted prior to any batching and more frequently if hauling and storage does not provide a consistent moisture content
Fine Aggregate[1]	Gradation and fineness modules	Same as course aggregate.
	Deleterious Substances	Same as course aggregate.
	Moisture, specific gravity and absorption[1]	Same as course aggregate.
Concrete	Slump	Conduct one test every day of placement and on additional test for every 50 cy placed and more frequently if batching appears inconsistent. Conduct in conjunction with taking concrete cylinders.
	Entrained Air	Conduct with each slump test.
	Ambient and concrete temperatures	Conduct with each slump test.
Concrete	Compressive strength and evaluation of results per ACI 214. (Includes unit weight of cylinder).	For all concrete placement, take one set of five cylinders per day and one additional set of cylinders for every 50 cy of each class of structural concrete. Cylinders shall be 4 inch by 8 inch. Test one cylinder at 7 days and three at 28 days. Fifth cylinder shall be held in reserve. A plot and statistical evaluation shall be maintained in accordance with ACI 214 for compressive strength results. Field cure cylinders shall be made when in situ strengths are required to be known.

[1]Aggregate moisture tests are to be conducted in conjunction with concrete strength tests for water/cement (w/c) calculations.

1

Provided to Builders Exchange of WA, Inc. For usage Conditions Agreement see www.bxwa.com - Always Verify Scal

Add the following new section:

1-06.7 Shop Drawings and Submittals

(COS GSP)

Where a time constraint is required for notifications, the referenced time limitation shall begin on the first business day following receipt of the notification.

1-06.7(1) General

Shop drawing and submittal review by the City or City's representative will be limited to general design requirements only, and shall not relieve the Contractor from responsibility for errors or omissions or responsibility for consequences due to deviations from the Contract Documents. No changes may be made in any submittal after it has been reviewed except with written notice and approval from the City.

The Contractor shall review each submittal and provide approval in writing or by stamping, with a statement indicating that the Contractor has reviewed and approved the submittal, verified dimensional information, materials, catalog numbers, and similar data, confirmed that specified criteria has been met, and acknowledges that the product, method, or information will function as intended.

Shop drawing and submittal data for each item shall contain sufficient information on each item to determine if it is in compliance with the contract requirements.

The City will provide review services for a first and second review of each submittal item free of charge to the Contractor. The cost to provide additional reviews shall be charged to the Contractor by withholding the appropriate amounts from each progress payment.

Shop drawing and submittal items that have been installed in the work but have not been approved through the review process shall be removed, and an approved product shall be furnished, all at the Contractor's expense. Under no circumstances shall payment be made to the Contractor for materials not approved through the submittal process.

1-06.7(2) Required Information

All submittals shall include a cover sheet as provided by the City. Shop drawings and submittals shall contain the following information for all items:

a. Project Name
b. Contractor
c. Engineer
d. City
e. Applicable specification and drawing reference
f. Associated Bid item
g. Dimensions and weights
h. Catalog information
i. Manufacturer's specifications

Provided to Builders Exchange of WA, Inc. For usage Conditions Agreement see www.bxwa.com - Always Verify Scal

j. Special handling instructions

k. Maintenance requirements

l. Wiring and control diagrams

m. List of contract exceptions

n. Other information as required by the Engineer

o. Installation and Operating Instructions

1-06.7(3) Review Schedule

Shop drawings and submittals will be reviewed as promptly as possible and transmitted to Contractor not later than 10 working days after receipt by the Engineer. The Contractor shall revise and resubmit previously rejected submittals as necessary to obtain approval. Delays caused by the need for resubmittal may not be a basis for an extension of contract time or delay damages at the discretion of the City. One set of electronic shop drawings will be returned to the Contractor via email after review.

1-06.7(4) Substitutions

Any product or construction method that does not meet these specifications will be considered a substitution. Substitutions must be approved prior to their installation or use on this project.

1-06.7(5) After Contract Execution

Within 10 working days after the date of the Notice of Award of Contract, City will consider formal requests from Contractor for substitution of product in place of those specified. Contractor shall submit one electronic copy of request for substitution to the email address specified above. Data shall include the necessary change in construction methods, including a detailed description of proposed method and related drawings illustrating methods. An itemized comparison of proposed substitution with product or method shall be provided.

In making a request for substitution, Contractor represents that he/she has personally investigated the proposed product or method and has determined that it is equal or superior to, in all respects, the product specified. All substitutions shall be reviewed and approved by the City prior to incorporation into the project. Upon review and acceptance by the City, Contractor shall coordinate installation of accepted substitutions into the work, making changes that may be required for work to be completed. Contractor waives all claims for additional costs related to substitutions that consequently become apparent.

1-07 Legal Relations and Responsibilities to the Public

1-07.1 Laws to be Observed

(COS GSP)

Section 1-07.1 is supplemented with the following:

Provided to Builders Exchange of WA, Inc. For usage Conditions Agreement see www.bxwa.com - Always Verify Scal

The Contractor shall at all times eliminate noise to the maximum practicable extent. Air compressing plants shall be equipped with silencers, and the exhaust of all gasoline motors or other power equipment shall be provided with mufflers. Special care shall be used to avoid noise or other nuisances, and the Contractor shall strictly observe all federal, state, and local regulations concerning noise.

Compliance with Laws

The Contractor shall comply with the requirements of all other City ordinances, state statutes, laws, and regulations, whether or not stated herein, which are specifically applicable to the public improvements and work to be performed.

Contractor's Safety Responsibilities

These construction documents and the joint and several phases of construction hereby contemplated are to be governed at all times by applicable provisions of the federal law(s), including but not limited to the latest amendments of the following:

Williams-Steiger Occupational Safety and Health Act of 1980, Public Law 91-596.

Part 1910 - Occupational Safety and Health Standards, Chapter XVII of Title 29, Code of Federal Regulations.

This project, the Contractor and its subcontractors, shall, at all times, be governed by Chapter XIII of Title 29, Code of Federal Regulations, Part 1518 - Safety and Health Regulations for Construction (35 CFR 75), as amended to date.

To implement the program, and to provide safe and healthful working conditions for all persons, the construction superintendent or his/her designated safety officer shall conduct general project safety meetings at the site at least once each month during the course of construction.

The prime contractor and all subcontractors shall immediately report all accidents, injuries, and health hazards to the Manager, in writing. This shall not obviate any mandatory reporting under the provisions of the Occupational Safety and Health Act of 1970. This program shall become a part of the contract documents and the contract between the Owner and the Contractor, and all subcontractors, as though fully written therein.

Where the location of the work is in proximity to overhead wires and power lines, the Contractor shall coordinate all work with the utility and shall provide for such measures as may be necessary for the protection of the workers.

(October 1, 2005 APWA GSP)

Supplement this section with the following:

In cases of conflict between different safety regulations, the more stringent regulation shall apply.

Provided to Builders Exchange of WA, Inc. For usage Conditions Agreement see www.bxwa.com - Always Verify Scal

The Washington State Department of Labor and Industries shall be the sole and paramount administrative agency responsible for the administration of the provisions of the Washington Industrial Safety and Health Act of 1973 (WISHA).

The Contractor shall maintain at the project site office, or other well known place at the project site, all articles necessary for providing first aid to the injured. The Contractor shall establish, publish, and make known to all employees, procedures for ensuring immediate removal to a hospital, or doctor's care, persons, including employees, who may have been injured on the project site. Employees should not be permitted to work on the project site before the Contractor has established and made known procedures for removal of injured persons to a hospital or a doctor's care.

The Contractor shall have sole responsibility for the safety, efficiency, and adequacy of the Contractor's plant, appliances, and methods, and for any damage or injury resulting from their failure, or improper maintenance, use, or operation. The Contractor shall be solely and completely responsible for the conditions of the project site, including safety for all persons and property in the performance of the work. This requirement shall apply continuously, and not be limited to normal working hours. The required or implied duty of the Engineer to conduct construction review of the Contractor's performance does not, and shall not, be intended to include review and adequacy of the Contractor's safety measures in, on, or near the project site.

1-07.2 State Taxes

Delete this section, including its sub-sections, in its entirety and replace it with the following:

1-07.2 State Sales Tax

(June 27, 2011 APWA GSP)

The Washington State Department of Revenue has issued special rules on the State sales tax. Sections 1-07.2(1) through 1-07.2(3) are meant to clarify those rules. The Contractor should contact the Washington State Department of Revenue for answers to questions in this area. The Contracting Agency will not adjust its payment if the Contractor bases a bid on a misunderstood tax liability.

The Contractor shall include all Contractor-paid taxes in the unit bid prices or other contract amounts. In some cases, however, state retail sales tax will not be included. Section 1-07.2(2) describes this exception.

The Contracting Agency will pay the retained percentage (or release the Contract Bond if a FHWA-funded Project) only if the Contractor has obtained from the Washington State Department of Revenue a certificate showing that all contract-related taxes have been paid (RCW 60.28.051). The Contracting Agency may deduct from its payments to the Contractor any amount the Contractor may owe the Washington State Department of Revenue, whether the amount owed relates to this contract or not. Any amount so deducted will be paid into the proper State fund.

1-07.2(1) State Sales Tax — Rule 171

WAC 458-20-171, and its related rules, apply to building, repairing, or improving streets, roads, etc., which are owned by a municipal corporation, or political subdivision of the state, or by the United States, and which are used primarily for foot or vehicular traffic. This

Provided to Builders Exchange of WA, Inc. For usage Conditions Agreement see www.bxwa.com - Always Verify Scal

includes storm or combined sewer systems within and included as a part of the street or road drainage system and power lines when such are part of the roadway lighting system. For work performed in such cases, the Contractor shall include Washington State Retail Sales Taxes in the various unit bid item prices, or other contract amounts, including those that the Contractor pays on the purchase of the materials, equipment, or supplies used or consumed in doing the work.

1-07.2(2) State Sales Tax — Rule 170

WAC 458-20-170, and its related rules, apply to the constructing and repairing of new or existing buildings, or other structures, upon real property. This includes, but is not limited to, the construction of streets, roads, highways, etc., owned by the state of Washington; water mains and their appurtenances; sanitary sewers and sewage disposal systems unless such sewers and disposal systems are within, and a part of, a street or road drainage system; telephone, telegraph, electrical power distribution lines, or other conduits or lines in or above streets or roads, unless such power lines become a part of a street or road lighting system; and installing or attaching of any article of tangible personal property in or to real property, whether or not such personal property becomes a part of the realty by virtue of installation.

For work performed in such cases, the Contractor shall collect from the Contracting Agency, retail sales tax on the full contract price. The Contracting Agency will automatically add this sales tax to each payment to the Contractor. For this reason, the Contractor shall not include the retail sales tax in the unit bid item prices, or in any other contract amount subject to Rule 170, with the following exception.

Exception: The Contracting Agency will not add in sales tax for a payment the Contractor or a subcontractor makes on the purchase or rental of tools, machinery, equipment, or consumable supplies not integrated into the project. Such sales taxes shall be included in the unit bid item prices or in any other contract amount.

1-07.2(3) Services

The Contractor shall not collect retail sales tax from the Contracting Agency on any contract wholly for professional or other services (as defined in Washington State Department of Revenue Rules 138 and 244).

1-07.6 Permits and Licenses

Section 1-07.6 is supplemented with the following:

(COS GSP)

Business License

Contractor and subcontractors must obtain a City of Stanwood business license. The Contractor may apply for a city business license at https://stanwoodwa.org/488/Business-Licensing.

1-07.7 Load Limits

Section 1-07.7 is supplemented with the following:

(March 13, 1995 WSDOT GSP)

Provided to Builders Exchange of WA, Inc. For usage Conditions Agreement see www.bxwa.com - Always Verify Scal

If the sources of materials provided by the Contractor necessitates hauling over roads other than State Highways, the Contractor shall, at the Contractor's expense, make all arrangements for the use of the haul routes.

1-07.8 High Visibility Apparel

The third and fourth paragraphs of Section 1-07.8 are revised to read

(November 4, 2024 WSDOT GSP)
High-visibility garments shall always be the outermost garments worn in a manner to ensure 360 degrees of uninterrupted background and retroreflective material encircling the torso.

High-visibility garments shall be labeled as, and in a condition compliant with the ANSI/ISEA 107-2015 publication entitled "American National Standard for High-Visibility Safety Apparel and Accessories," or equivalent revisions.

Traffic Control Personnel

Section 1-07.8(1) is revised to read:

(November 4, 2024 WSDOT GSP)
All personnel performing the Work described in Section 1-10 (including traffic control supervisors, flaggers, and others performing traffic control labor of any kind) shall comply with the following:

1. During daylight hours with clear visibility, workers shall wear a high-visibility ANSI/ISEA 107 Type R Class 2 or 3 garment with background material that are fluorescent yellow-green, fluorescent orange-red, or fluorescent red in color; and a high visibility hardhat that is white, yellow, yellow-green, orange, or red in color; and

2. During hours of darkness (½ hour before sunset to ½ hour after sunrise) or other low-visibility conditions (snow, fog, etc.), workers shall wear a high-visibility ANSI/ISEA 107 Type R Class 2 or 3 garment with background material that are fluorescent yellow-green, fluorescent orange-red, or fluorescent red in color; a high-visibility lower garment meeting ANSI/ISEA 107 Class E, and a high visibility hardhat marked with at least 12 square inches of retroreflective material applied to provide 360 degrees of visibility.

1-07.9 Wages

1-07.9(5) Required Documents

(July 8, 2024 APWA GSP)

This section is revised to read as follows:

All Statements of Intent to Pay Prevailing Wages, Affidavits of Wages Paid and Certified Payrolls, including a signed Statement of Compliance for Federal-aid projects, shall be submitted to the Engineer and to the State L&I online Prevailing Wage Intent & Affidavit (PWIA) system. When apprenticeship is a requirement of the contract, include in PWIA all apprentices.

Provided to Builders Exchange of WA, Inc. For usage Conditions Agreement see www.bxwa.com - Always Verify Scal

1-07.14 Responsibility for Damage

(COS GSP)

Section 1-07.14 is supplemented with the following:

The Contractor further agrees that it is waiving immunity under Industrial Insurance Law Title 51 RCW for any claims brought against the City by its employees. In the event Contractor fails, after receipt of timely notice from the City, to appear, defend, or pay as required by the first paragraph of this section, then in that event and in that event only, the City may in its sole discretion, deduct from the progress payments to the Contractor and pay any amount sufficient to pay any claim, of which the City may have knowledge and regardless of the informalities of notice of such claim, arising out of the performance of this contract, provided the City has theretofore given notice of receipt of such claim to the Contractor and the Contractor has failed to act thereon.

1-07.15 Temporary Water Pollution Prevention

(*COS GSP*)

Section 1-07.15 is revised as follows:

Temporary Water Pollution/Erosion Control work shall consist of temporary control measures as shown on the plans, specified in these Special Provisions and Standard Specifications, or as directed by the Engineer. This work is intended to provide prevention, control, and abatement of water pollution, and to minimize damage to adjacent properties and streams or other bodies of water.

Where directed by the Engineer and as shown on the plans, the Contractor shall construct inlet protection fabric over catch basins, filter fabric or silt fences to treat runoff prior to discharge from the work site.

Additional work as directed by the Engineer and not shown on the Plans shall be compensated as set forth in Standard Specifications Section 1-09.6.

Silt fence or filter fabric fence and inlet protection shall be constructed per the details provided in the plans and in accordance with Section 8-01 of the Standard Specifications. The Contractor shall be responsible for maintaining, removing, and disposing of all temporary Water Pollution/Erosion control items.

1-07.17 Utilities and Similar Facilities

The second sentence of the seventh paragraph is replaced with the following:

No additional compensation will be made to the Contractor for reason of delay caused by actions of any utility company and the Contractor shall consider such costs to be incidental to the other items of the contract.

Section 1-07.17 is further supplemented with the following:

Provided to Builders Exchange of WA, Inc. For usage Conditions Agreement see www.bxwa.com - Always Verify Scal

Locations and dimensions shown in the Plans for existing facilities are in accordance with available information obtained without uncovering, measuring, or other verification.

The Contractor is alerted to the existence of Chapter 19.122 RCW, a law relating to underground utilities. Any cost to the Contractor incurred as a result of this law shall be at the Contractor's expense. No excavation shall begin until all known facilities in the vicinity of the excavation area have been located and marked.

The Contractor shall give advance notice to all utility companies involved where work is to take place and in all other respects comply with the provisions of Chapter 19.122 RCW. Notice shall include, but not be limited to, the following utility companies:

1. Water, sewer, storm, streets – minimum two working days in advance
2. Power (Electric and Natural Gas) – minimum 48 hours in advance
3. Telephone – minimum 30 days in advance
4. Natural Gas – minimum 48 hours in advance
5. Cable Television – minimum 48 hours in advance
6. Transit – minimum 10 working days in advance

The following is a list of some utilities serving the Stanwood area. This is not intended or represented to be a complete list and is provided for the Contractor's convenience.

Utility	***Agency/ Company***	***Address***	***Contact***	***Phone***
Water/ Sanitary Sewer/ Storm Sewer	City of Stanwood	10220 270th Street NW Stanwood, WA 98292	Kevin Hushagen	(360) 629-9782
Natural Gas	Cascade Natural Gas	1520 South 2nd Street Mt. Vernon, WA 98273	Addam Sad	(360) 336-3866
Telephone	Frontier	13923 Smokey Point Blvd, Marysville, WA 98271	Wayne Wendell	(360) 757-3406
Telephone	Astound		Casey Kolling	(425) 754-6317
Power	Snohomish County PUD No. 1	9124 270th Street NW Stanwood, WA 98292	David Stunz	(360) 329-5713

Note that most utility companies may be contacted for locations through the "One Call" system, 1-800-424-5555. In the event of a gas emergency, call 911

Provided to Builders Exchange of WA, Inc. For usage Conditions Agreement see www.bxwa.com - Always Verify Scal

The Contractor shall coordinate the Work with these utilities and shall notify the Engineer in advance of any conflicts affecting the Work schedule. The utility companies shall witness or perform all shutdowns, connections or disconnections.

Wherever in the course of the construction operation it becomes necessary to cause an outage of utilities, it shall be the Contractor's responsibility to notify the affected users not less than twenty-four (24) hours in advance of the creation of such outage. The Contractor shall make reasonable effort to minimize the duration of outages.

The Contractor shall be responsible for any breakage of utilities or services resulting from its operations and shall hold the Contracting Agency and its agents harmless from any claims resulting from disruption of, or damage to, same.

Other Notifications

Service Area Turn Off: All service area turn off notices must be distributed to affected parties two working days in advance of any scheduled shut off. City to provide door hangers and affected service area map. The contractor shall fill in all required information prior to hanging door hanger.

Entry onto Private Property: Each property owner shall be given 48 hours advance written notice prior to entry by the Contractor.

1-07.17(2) Utility Construction, Removal or Relocation by Others
(COS GSP)

Section 1-07.17(2) is supplemented with the following:

Under no circumstances will discrepancies in location or incompleteness in description of existing utilities or improvements, whether they are visible from the surface, buried, or otherwise obscured, be considered as a basis for additional compensation to the Contractor.

Potholing

Locations of possible conflicts at utility crossings can be seen on the Plans. Based on the actual location of utility markings, it may be necessary to uncover existing utilities and determine the exact locations.

After completing field marking of the existing utilities, the Contractor shall determine if an existing utility may be in conflict with the planned improvements. Should a conflict seem likely, the Contractor shall notify the City. If the City concurs that a conflict is likely, the Contractor will be directed to expose the location of the subject utility (pothole). When potholing is required by the City, the Contractor shall expose the location of the existing utility and record the size of pipe and horizontal and vertical location on the Contractor's Record Drawings. Upon receipt of this information, the Engineer will determine if a conflict exists. The City will notify the Contractor within seven full working days as to what design modifications, if any, are required to resolve the conflict.

Payment shall be made for the following Bid item when included in the Proposal:

"Potholing" shall be measured per each.

Provided to Builders Exchange of WA, Inc. For usage Conditions Agreement see www.bxwa.com - Always Verify Scal

The unit contract price for "Potholing" shall be full compensation for all labor, tools, equipment, and materials necessary to expose the locations of existing utilities, record vertical and horizontal locations, backfill, and compact excavated areas per City of Stanwood Standard Details. For the purpose of establishing a common basis for evaluating bids, an arbitrary quantity has been shown on the bid form and does not necessarily represent the quantity, if any, of "Potholing" that may be necessary for project work. Therefore, the "significant change" provisions of Section 1-04.6 do not apply. Actual quantities will be determined in the field as work progresses. The Minor Change bid item will be used cover any delays encountered due to the results of potholing.

1-07.18 Public Liability and Property Damage Insurance

Delete this section in its entirety, and replace it with the following:

1-07.18 Insurance

(January 4, 2024 APWA GSP)

1-07.18(1) General Requirements

A. The Contractor shall procure and maintain the insurance described in all subsections of section 1-07.18 of these Special Provisions, from insurers with a current A. M. Best rating of not less than A-: VII and licensed to do business in the State of Washington. The Contracting Agency reserves the right to approve or reject the insurance provided, based on the insurer's financial condition.

B. The Contractor shall keep this insurance in force without interruption from the commencement of the Contractor's Work through the term of the Contract and for thirty (30) days after the Physical Completion date, unless otherwise indicated below.

C. If any insurance policy is written on a claims-made form, its retroactive date, and that of all subsequent renewals, shall be no later than the effective date of this Contract. The policy shall state that coverage is claims made and state the retroactive date. Claims-made form coverage shall be maintained by the Contractor for a minimum of 36 months following the Completion Date or earlier termination of this Contract, and the Contractor shall annually provide the Contracting Agency with proof of renewal. If renewal of the claims made form of coverage becomes unavailable, or economically prohibitive, the Contractor shall purchase an extended reporting period ("tail") or execute another form of guarantee acceptable to the Contracting Agency to assure financial responsibility for liability for services performed.

D. The Contractor's Automobile Liability, Commercial General Liability and Excess or Umbrella Liability insurance policies shall be primary and non-contributory insurance as respects the Contracting Agency's insurance, self-insurance, or self-insured pool coverage. Any insurance, self-insurance, or self-insured pool coverage maintained by the Contracting Agency shall be excess of the Contractor's insurance and shall not contribute with it.

E. The Contractor shall provide the Contracting Agency and all additional insureds with written notice of any policy cancellation, within two business days of their receipt of such notice.

F. The Contractor shall not begin work under the Contract until the required insurance has been obtained and approved by the Contracting Agency

Provided to Builders Exchange of WA, Inc. For usage Conditions Agreement see www.bxwa.com - Always Verify Scal

G. Failure on the part of the Contractor to maintain the insurance as required shall constitute a material breach of contract, upon which the Contracting Agency may, after giving five business days' notice to the Contractor to correct the breach, immediately terminate the Contract or, at its discretion, procure or renew such insurance and pay any and all premiums in connection therewith, with any sums so expended to be repaid to the Contracting Agency on demand, or at the sole discretion of the Contracting Agency, offset against funds due the Contractor from the Contracting Agency.

H. All costs for insurance shall be incidental to and included in the unit or lump sum prices of the Contract and no additional payment will be made.

I. Under no circumstances shall a wrap up policy be obtained, for either initiating or maintaining coverage, to satisfy insurance requirements for any policy required under this Section. A "wrap up policy" is defined as an insurance agreement or arrangement under which all the parties working on a specified or designated project are insured under one policy for liability arising out of that specified or designated project.

1-07.18(2) Additional Insured

All insurance policies, with the exception of Workers Compensation, and of Professional Liability and Builder's Risk (if required by this Contract) shall name the following listed entities as additional insured(s) using the forms or endorsements required herein:

- the Contracting Agency and its officers, elected officials, employees, agents, and volunteers

The above-listed entities shall be additional insured(s) for the full available limits of liability maintained by the Contractor, irrespective of whether such limits maintained by the Contractor are greater than those required by this Contract, and irrespective of whether the Certificate of Insurance provided by the Contractor pursuant to 1-07.18(4) describes limits lower than those maintained by the Contractor.

For Commercial General Liability insurance coverage, the required additional insured endorsements shall be at least as broad as ISO forms CG 20 10 10 01 for ongoing operations and CG 20 37 10 01 for completed operations.

1-07.18(3) Subcontractors

The Contractor shall cause each subcontractor of every tier to provide insurance coverage that complies with all applicable requirements of the Contractor-provided insurance as set forth herein, except the Contractor shall have sole responsibility for determining the limits of coverage required to be obtained by subcontractors.

The Contractor shall ensure that all subcontractors of every tier add all entities listed in 1-07.18(2) as additional insureds, and provide proof of such on the policies as required by that section as detailed in 1-07.18(2) using an endorsement as least as broad as ISO CG 20 10 10 01 for ongoing operations and CG 20 37 10 01 for completed operations.

Upon request by the Contracting Agency, the Contractor shall forward to the Contracting Agency evidence of insurance and copies of the additional insured endorsements of each subcontractor of every tier as required in 1-07.18(4) Verification of Coverage.

1-07.18(4) Verification of Coverage

Provided to Builders Exchange of WA, Inc. For usage Conditions Agreement see www.bxwa.com - Always Verify Scal

The Contractor shall deliver to the Contracting Agency a Certificate(s) of Insurance and endorsements for each policy of insurance meeting the requirements set forth herein when the Contractor delivers the signed Contract for the work. Failure of Contracting Agency to demand such verification of coverage with these insurance requirements or failure of Contracting Agency to identify a deficiency from the insurance documentation provided shall not be construed as a waiver of Contractor's obligation to maintain such insurance.

Verification of coverage shall include:

1. An ACORD certificate or a form determined by the Contracting Agency to be equivalent.
2. Copies of all endorsements naming Contracting Agency and all other entities listed in 1-07.18(2) as additional insured(s), showing the policy number. The Contractor may submit a copy of any blanket additional insured clause from its policies instead of a separate endorsement.
3. Any other amendatory endorsements to show the coverage required herein.
4. A notation of coverage enhancements on the Certificate of Insurance shall not satisfy these requirements – actual endorsements must be submitted.

Upon request by the Contracting Agency, the Contractor shall forward to the Contracting Agency a full and certified copy of the insurance policy(s). If Builders Risk insurance is required on this Project, a full and certified copy of that policy is required when the Contractor delivers the signed Contract for the work.

1-07.18(5) Coverages and Limits

The insurance shall provide the minimum coverages and limits set forth below. Contractor's maintenance of insurance, its scope of coverage, and limits as required herein shall not be construed to limit the liability of the Contractor to the coverage provided by such insurance, or otherwise limit the Contracting Agency's recourse to any remedy available at law or in equity.

All deductibles and self-insured retentions must be disclosed and are subject to approval by the Contracting Agency. The cost of any claim payments falling within the deductible or self-insured retention shall be the responsibility of the Contractor. In the event an additional insured incurs a liability subject to any policy's deductibles or self-insured retention, said deductibles or self-insured retention shall be the responsibility of the Contractor.

1-07.18(5)A Commercial General Liability

Commercial General Liability insurance shall be written on coverage forms at least as broad as ISO occurrence form CG 00 01, including but not limited to liability arising from premises, operations, stop gap liability, independent contractors, products-completed operations, personal and advertising injury, and liability assumed under an insured contract. There shall be no exclusion for liability arising from explosion, collapse or underground property damage.

The Commercial General Liability insurance shall be endorsed to provide a per project general aggregate limit, using ISO form CG 25 03 05 09 or an equivalent endorsement.

Contractor shall maintain Commercial General Liability Insurance arising out of the Contractor's completed operations for at least three years following Substantial Completion of the Work.

Such policy must provide the following minimum limits:

$2,000,000 Each Occurrence

Provided to Builders Exchange of WA, Inc. For usage Conditions Agreement see www.bxwa.com - Always Verify Scal

$3,000,000	General Aggregate
$3,000,000	Products & Completed Operations Aggregate
$2,000,000	Personal & Advertising Injury each offence
$2,000,000	Stop Gap / Employers' Liability each accident

1-07.18(5)B Automobile Liability

Automobile Liability shall cover owned, non-owned, hired, and leased vehicles; and shall be written on a coverage form at least as broad as ISO form CA 00 01. If the work involves the transport of pollutants, the automobile liability policy shall include MCS 90 and CA 99 48 endorsements.

Such policy must provide the following minimum limit:

$1,000,000	Combined single limit each accident

1-07.18(5)C Workers' Compensation

The Contractor shall comply with Workers' Compensation coverage as required by the Industrial Insurance laws of the State of Washington.

1-07.23 Public Convenience and Safety

(COS GSP)

Section 1-07.23 is supplemented with the following:

No road or street shall be closed to the public except as permitted in these plans and specifications or with the approval of the Engineer and proper governmental authority. Fire hydrants on or adjacent to the work shall be kept accessible to fire-fighting equipment at all times. Provision shall be made by the Contractor to ensure the proper functioning of all gutters, sewer inlets, drainage ditches and culverts, irrigation ditches and natural water courses, and storm sewer facilities throughout the project. Temporary interruption of service will be allowed only with the permission of the Engineer.

The Stanwood Police Department and North County Regional Fire Authority shall be notified at least four (4) hours in advance of any actions by the Contractor that may affect the functions of either the Police Department or Fire Department.

The Contractor shall conduct its work and take preventative measures so that dust or other particulate matter in the project area shall not become objectionable to the adjacent property owners or general public. Should the Owner determine the Contractor is not fulfilling its obligation in this regard; the Owner reserves the right to take such action as may be necessary to remedy the objectionable condition and to charge the Contractor with any cost that may be incurred in such remedial action. All work shall be carried on with due regard for the safety of the public. No driveway, whether public, commercial, or private, may be closed without prior approval of the Owner, project supervisor, or Engineer unless written authority has been given by the affected property owner. The Contractor shall be responsible for notifying the affected property owners 24 hours in advance of scheduled interruptions to access.

1-07.23(1) Construction Under Traffic

Section 1-07.23(1) is supplemented with the following:

Provided to Builders Exchange of WA, Inc. For usage Conditions Agreement see www.bxwa.com - Always Verify Scal

(November 4, 2024 WSDOT GSP)
Lane, ramp, shoulder, and roadway closures are only permitted as follows:

1. Any plates used on roadway may not be in place for more than 7 calendar days. Plates shall be pinned when used. Plates shall be installed with a cold mix asphalt lip to reduce traffic bump.
2. One-lane, alternating traffic with the use of flaggers will be allowed as a traffic control measure.

If the Engineer determines the permitted closure hours adversely affect traffic, the Engineer may adjust the hours accordingly. The Engineer will notify the Contractor in writing of any change in the closure hours. Exceptions to these restrictions are listed below and when applicable take precedence over closures listed above. The Engineer may also consider on a case-by-case basis additional exceptions following a written request by the Contractor.

Lane, ramp, shoulder, and roadway closures are not allowed on any of the following:

1. A holiday,

2. A holiday weekend; holidays that occur on Friday, Saturday, Sunday or Monday are considered a holiday weekend. A holiday weekend includes Saturday, Sunday, and the holiday.

3. After *** 3:00 P.M. *** on the day prior to a holiday or holiday weekend, and

4. Before *** 8:00 A.M. *** on the day after the holiday or holiday weekend.

Traffic Delays
When Automated Flagger Assistance Devices (AFADs) or flaggers are used to control traffic, traffic shall not be stopped for more than *** 5 *** minutes at any time. All traffic congestion shall be allowed to clear before traffic is delayed again.

If the delay becomes greater than *** 5*** minutes, the Contractor shall immediately begin to take action to cease the operations that are causing the delays. If the *** 5 *** minute delay limit has been exceeded, as determined by the Engineer, the Contractor shall provide to the Engineer, a written proposal to revise his work operations to meet the *** 5 *** minute limit. This proposal shall be accepted by the Engineer prior to resuming any work requiring traffic control.

There shall be no delay to medical, fire, or other emergency vehicles. The Contractor shall alert all flaggers and personnel of this requirement.

General Restrictions
Construction vehicles using a closed traffic lane shall travel only in the normal direction of traffic flow unless expressly allowed in an accepted traffic control plan. Construction vehicles shall be equipped with flashing or rotating amber lights.

Provided to Builders Exchange of WA, Inc. For usage Conditions Agreement see www.bxwa.com - Always Verify Scal

No two consecutive on-ramps, off-ramps, or intersections shall be closed at the same time and only one ramp at an interchange shall be closed, unless specifically shown in the Plans.

Roads or ramps that are designated as part of a detour shall not be closed or restricted during the implementation of that detour, unless specifically shown in the Plans.

Controlled Access

No special access or egress shall be allowed by the Contractor other than normal legal movements or as shown in the Plans.

Contractor's vehicles of 10,000 GVW or greater shall not exit or enter a lane open to public traffic except as follows:

Egress and ingress shall only occur during the hours of allowable lane closures, and:

1. For exiting an open lane of traffic, by decelerating in a lane that is closed during the allowable hours for lane closures.

2. For entering an open lane of traffic, by accelerating in a closed lane during the allowable hours for lane closures.

Traffic control vehicles are excluded from the gross vehicle weight requirement. If placing construction signs will restrict traveled lanes, then the work will be permitted during the hours of allowable lane closures.

Advance Notification

The Contractor shall notify the Engineer in writing of any traffic impacts related to lane closure, shoulder closure, sidewalk closure, or any combination for the week by 12:00 p.m. (noon) Wednesday the week prior to the stated impacts.

The Contractor shall notify the Engineer in writing ten working days in advance of any traffic impacts related to full roadway closure, ramp closure, or both.

The Contractor shall notify the Engineer in writing of any changes to the stated traffic impacts a minimum of 48 hours prior to the traffic impacts.

1-07.24 Rights of Way

(July 23, 2015 APWA GSP)

Delete this section and replace it with the following:

Street Right of Way lines, limits of easements, and limits of construction permits are indicated in the Plans. The Contractor's construction activities shall be confined within these limits, unless arrangements for use of private property are made.

Generally, the Contracting Agency will have obtained, prior to bid opening, all rights of way and easements, both permanent and temporary, necessary for carrying out the work. Exceptions to this are noted in the Bid Documents or will be brought to the Contractor's attention by a duly issued Addendum.

Provided to Builders Exchange of WA, Inc. For usage Conditions Agreement see www.bxwa.com - Always Verify Scal

Whenever any of the work is accomplished on or through property other than public Right of Way, the Contractor shall meet and fulfill all covenants and stipulations of any easement agreement obtained by the Contracting Agency from the owner of the private property. Copies of the easement agreements may be included in the Contract Provisions or made available to the Contractor as soon as practical after they have been obtained by the Engineer.

Whenever easements or rights of entry have not been acquired prior to advertising, these areas are so noted in the Plans. The Contractor shall not proceed with any portion of the work in areas where right of way, easements or rights of entry have not been acquired until the Engineer certifies to the Contractor that the right of way or easement is available or that the right of entry has been received. If the Contractor is delayed due to acts of omission on the part of the Contracting Agency in obtaining easements, rights of entry or right of way, the Contractor will be entitled to an extension of time. The Contractor agrees that such delay shall not be a breach of contract.

Each property owner shall be given 48 hours notice prior to entry by the Contractor. This includes entry onto easements and private property where private improvements must be adjusted.

The Contractor shall be responsible for providing, without expense or liability to the Contracting Agency, any additional land and access thereto that the Contractor may desire for temporary construction facilities, storage of materials, or other Contractor needs. However, before using any private property, whether adjoining the work or not, the Contractor shall file with the Engineer a written permission of the private property owner, and, upon vacating the premises, a written release from the property owner of each property disturbed or otherwise interfered with by reasons of construction pursued under this contract. The statement shall be signed by the private property owner, or proper authority acting for the owner of the private property affected, stating that permission has been granted to use the property and all necessary permits have been obtained or, in the case of a release, that the restoration of the property has been satisfactorily accomplished. The statement shall include the parcel number, address, and date of signature. Written releases must be filed with the Engineer before the Completion Date will be established.

1-08 Prosecution and Progress

Add the following new section:

1-08.0 Preliminary Matters

(May 25, 2006 APWA GSP)

Add the following new section:

1-08.0(1) Preconstruction Conference

(July 8, 2024 APWA GSP)

Prior to the Contractor beginning the work, a preconstruction conference will be held between the Contractor, the Engineer and such other interested parties as may be invited. The purpose of the preconstruction conference will be:

Provided to Builders Exchange of WA, Inc. For usage Conditions Agreement see www.bxwa.com - Always Verify Scal

1. To review the initial progress schedule;
2. To establish a working understanding among the various parties associated or affected by the work;
3. To establish and review procedures for progress payment, notifications, approvals, submittals, etc.;
4. To review DBE Requirements, Training Plans, and Apprenticeship Plans, when applicable.
5. To establish normal working hours for the work;
6. To review safety standards and traffic control; and
7. To discuss such other related items as may be pertinent to the work.

The Contractor shall prepare and submit at the preconstruction conference the following:

1. A breakdown of all lump sum items;
2. A preliminary schedule of working drawing submittals; and
3. A list of material sources for approval if applicable.

Add the following new section:

1-08.0(2) Hours of Work

(*****)

Except in the event of an emergency, no work shall be done between the hours of 6:00 p.m. and 7:00 a.m., on Fridays, on weekends, or on holidays observed by the City of Stanwood and identified in Section 1-08.5 of the Standard Specifications. If the proper and efficient prosecution of the work requires operations during the night, hours of operation more than 10 hours per day, or work weeks greater than 40 hours in duration, the written permission of the Owner shall be obtained before starting such items of the work and shall be in full compliance with terms therewith.

The Contractor shall provide a written request to the Owner at least five (5) business days in advance of working non-regular or extended hours. The request shall detail the dates, times, locations of work, and a description of the work to be performed, as well as the personnel and equipment that will be used during these times. No additional payment will be made for overtime costs incurred from working outside the normal working hours. The Contractor shall factor all possible overtime costs into his bid prices for the project. In general, nighttime work shall not be approved for this project; the request to work non-regular hours would involve earlier start times and later finish times and/or weekend work.

Except in the case of emergency or unless otherwise approved by the Contracting Agency, the normal straight time working hours for the contract shall be any consecutive 10-hour period between 7:00 a.m. and 6:00 p.m. of a working day with a maximum 1-hour lunch break and a 4-day work week of Monday through Thursday. The normal straight time 10-hour working period for the contract shall be established at the preconstruction conference or prior to the Contractor commencing the work.

If a Contractor desires to perform work on holidays, Fridays, Saturdays, Sundays, or before 7:00 a.m. or after 6:00 p.m. on any day, the Contractor shall apply in writing to the Engineer for permission to work such times. Permission to work longer than an 8-hour period between 7:00 a.m. and 6:00 p.m. is not required. Such requests shall be submitted to the Engineer no

Provided to Builders Exchange of WA, Inc. For usage Conditions Agreement see www.bxwa.com - Always Verify Scal

later than noon on the working day prior to the day for which the Contractor is requesting permission to work.

Permission to work Fridays, Saturdays, Sundays, holidays or other than the agreed upon normal straight time working hours Monday through Thursday may be given subject to certain other conditions set forth by the Contracting Agency or Engineer. These conditions may include but are not limited to: requiring the Engineer or such assistants as the Engineer may deem necessary to be present during the work; requiring the Contractor to reimburse the Contracting Agency for the costs in excess of straight-time costs for Contracting Agency employees who worked during such times, on non-Federal aid projects; considering the work performed on Saturdays and holidays as working days with regards to the contract time; and considering multiple work shifts as multiple working days with respect to contract time even though the multiple shifts occur in a single 24-hour period. Assistants may include, but are not limited to, survey crews; personnel from the Contracting Agency's material testing lab; inspectors; and other Contracting Agency employees when in the opinion of the Engineer, such work necessitates their presence.

1-08.1 Subcontracting

(COS GSP)

Section 1-08.1 is supplemented with the following:

A Subcontractor or an Agent to the Subcontractor will not be permitted to perform any work under the contract until the following documents have been completed and submitted to the Engineer:

1. Request to Sublet Work (form 421-012).
3. Statement of Intent to Pay Prevailing Wages (Form 700-029-000).

The Contractor's records pertaining to the requirements of this Special Provision shall be open to inspection or audit by representatives of the Department during the life of the contract and for a period of not less than three years after the date of acceptance of the contract. The Contractor shall retain these records for that period. The Contractor shall also guarantee that these records of all Subcontractors and Agents shall be open to similar inspection or audit for the same period.

1-08.3 Progress Schedule

(COS GSP)

Section 1-08.3 is supplemented with the following:

The order of work will be at the Contractor's option, in keeping with good construction practice and the terms of the contract. All work shall be carried out in accordance with the requirements of the City of Stanwood in compliance with the plans and specifications. However, the Contractor shall so schedule the work within the time constraints noted in the various contract documents, including any permits. The Contractor is cautioned to review said documents and permits and schedule the work appropriately as no additional compensation will be made to the Contractor due to the time constraints imposed by such documents.

Provided to Builders Exchange of WA, Inc. For usage Conditions Agreement see www.bxwa.com - Always Verify Scal

1-08.3(2) Progress Schedule Types

1-08.3(2)A Type A Progress Schedule
(December 30, 2022 APWA GSP)

Revise this section to read:

The Contractor shall submit 5 copies of a Type A Progress Schedule no later than at the preconstruction conference, or some other mutually agreed upon submittal time. The schedule may be a critical path method (CPM) schedule, bar chart, or other standard schedule format. Regardless of which format used, the schedule shall identify the critical path. The Engineer will evaluate the Type A Progress Schedule and approve or return the schedule for corrections within 15 calendar days of receiving the submittal.

1-08.4 Prosecution of Work
Delete this section and replace it with the following:

1-08.4 Notice to Proceed and Prosecution of Work
(July 23, 2015 APWA GSP)

Notice to Proceed will be given after the contract has been executed and the contract bond and evidence of insurance have been approved and filed by the Contracting Agency. The Contractor shall not commence with the work until the Notice to Proceed has been given by the Engineer. The Contractor shall commence construction activities on the project site within ten days of the Notice to Proceed Date, unless otherwise approved in writing. The Contractor shall diligently pursue the work to the physical completion date within the time specified in the contract. Voluntary shutdown or slowing of operations by the Contractor shall not relieve the Contractor of the responsibility to complete the work within the time(s) specified in the contract.

When shown in the Plans, the first order of work shall be the installation of high visibility fencing to delineate all areas for protection or restoration, as described in the Contract. Installation of high visibility fencing adjacent to the roadway shall occur after the placement of all necessary signs and traffic control devices in accordance with 1-10.1(2). Upon construction of the fencing, the Contractor shall request the Engineer to inspect the fence. No other work shall be performed on the site until the Contracting Agency has accepted the installation of high visibility fencing, as described in the Contract.

Section 1-08.4 is supplemented with the following:

ORDER OF WORK
As specified under Section 1-08.6, a suspension of work will occur from the date of Notice to Proceed until August 1, 2025. No onsite Work shall occur during this suspension.

The third sentence of the first paragraph of Section 1-08.4, as revised by the July 23, 2015 APWA GSP, is revised to read:

The Contractor shall commence construction activities on the project site within ten days of August 4, 2025, unless otherwise approved in writing.

Provided to Builders Exchange of WA, Inc. For usage Conditions Agreement see www.bxwa.com - Always Verify Scal

1-08.5 Time for Completion

(*****)

Revise the third and fourth paragraphs to read:

Contract time shall begin on the first working day following the Notice to Proceed Date and Procurement Suspension as described in Section 1-08.6.

Each working day shall be charged to the contract as it occurs, until the contract work is physically complete. If substantial completion has been granted and all the authorized working days have been used, charging of working days will cease. Each week the Engineer will provide the Contractor a statement that shows the number of working days: (1) charged to the contract the week before; (2) specified for the physical completion of the contract; and (3) remaining for the physical completion of the contract. The statement will also show the nonworking days and all partial or whole days the Engineer declares as unworkable The statement will be identified as a Written Determination by the Engineer. If the Contractor does not agree with the Written Determination of working days, the Contractor shall pursue the protest procedures in accordance with Section 1-04.5. By failing to follow the procedures of Section 1-04.5, the Contractor shall be deemed as having accepted the statement as correct. If the Contractor is approved to work 10 hours a day and 4 days a week (a 4-10 schedule) and the fifth day of the week in which a 4-10 shift is worked would ordinarily be charged as a working day then the fifth day of that week will be charged as a working day whether or not the Contractor works on that day.

Revise the sixth paragraph to read:

The Engineer will give the Contractor written notice of the completion date of the contract after all the Contractor's obligations under the contract have been performed by the Contractor. The following events must occur before the Completion Date can be established:

1. The physical work on the project must be complete; and
2. The Contractor must furnish all documentation required by the contract and required by law, to allow the Contracting Agency to process final acceptance of the contract. The following documents must be received by the Project Engineer prior to establishing a completion date:
   a. Certified Payrolls (per Section 1-07.9(5)).
   b. Material Acceptance Certification Documents
   c. Monthly Reports in DMCS of the amounts paid including the final payment confirmation to all firms required by Section 1-08.1(7)A if applicable
   d. Final Contract Voucher Certification
   e. Copies of the approved "Affidavit of Prevailing Wages Paid" for the Contractor and all Subcontractors
   f. A copy of the Notice of Termination sent to the Washington State Department of Ecology (Ecology); the elapse of 30 calendar days from the date of receipt of the Notice of Termination by Ecology; and no rejection of the Notice of Termination by Ecology. This requirement will not apply if the Construction Stormwater General Permit is transferred back to the Contracting Agency in accordance with Section 8-01.3(16).

Provided to Builders Exchange of WA, Inc. For usage Conditions Agreement see www.bxwa.com - Always Verify Scal

g. Property owner releases per Section 1-07.24

Section 1-08.5 is supplemented with the following:

(COS GSP)
This project shall be physically completed in its entirety within *** 40 *** working days.

1-08.6 Suspension of Work

Section 1-08.6 is supplemented with the following:

(*****)
Contract time will be suspended for procurement of critical materials (Procurement Suspension) from the date of Notice to Proceed until August 1, 2025. No onsite Work can occur during this suspension. As part of this suspension, the Contractor shall within 21 calendar days after execution by the Contracting Agency, place purchase orders for all materials deemed critical by the Contracting Agency for physical completion of the contract. The Contractor shall provide copies of purchase orders for the critical materials. Such purchase orders shall disclose the purchase order date and estimated delivery dates for the listed critical material:

***Illumination System – Complete
Rectangular Rapid Flashing Beacon – Mid-Block***

This procurement suspension is not subject to an equitable adjustment or protest process by the Contractor.

1-08.9 Liquidated Damages

(March 3, 2021 APWA GSP, Option B)

Revise the second and third paragraphs to read:

Accordingly, the Contractor agrees:

1. To pay (according to the following formula) liquidated damages for each working day beyond the number of working days established for Physical Completion, and

2. To authorize the Engineer to deduct these liquidated damages from any money due or coming due to the Contractor.

Liquidated Damages Formula

LD=0.15C/T

Where:

LD = liquidated damages per working day (rounded to the nearest dollar)
C = original Contract amount
T = original time for Physical Completion

Provided to Builders Exchange of WA, Inc. For usage Conditions Agreement see www.bxwa.com - Always Verify Scal

When the Contract Work has progressed to Substantial Completion as defined in the Contract, the Engineer may determine the Contract Work is Substantially Complete. The Engineer will notify the Contractor in writing of the Substantial Completion Date. For overruns in Contract time occurring after the date so established, the formula for liquidated damages shown above will not apply. For overruns in Contract time occurring after the Substantial Completion Date, liquidated damages shall be assessed on the basis of direct engineering and related costs assignable to the project until the actual Physical Completion Date of all the Contract Work. The Contractor shall complete the remaining Work as promptly as possible. Upon request by the Project Engineer, the Contractor shall furnish a written schedule for completing the physical Work on the Contract.

1-09 Measurement and Payment

1-09.2(1) General Requirements for Weighing Equipment

(COS GSP)

The last paragraph of Section 1-09.2 is supplemented with the following:

Trucks and Tickets

All tickets shall, at a minimum, contain the following information:

1. Ticket serial number
2. Date and hour of weighing
3. Weigher's identification

Duplicate tally tickets shall be prepared to accompany each truckload of materials delivered to the project.

It is the responsibility of the Contractor to see that tickets are given to the Inspector on the project for each truckload of material delivered. Pay quantities will be prepared on the basis of said tally tickets, delivered to the Inspector at time of delivery of materials. Tickets not collected at the time of delivery will not be honored for payment.

1-09.6 Force Account

(December 30, 2022 APWA GSP)

Supplement this section with the following:

The Contracting Agency has estimated and included in the Proposal, dollar amounts for all items to be paid per force account, only to provide a common proposal for Bidders. All such dollar amounts are to become a part of Contractor's total bid. However, the Contracting Agency does not warrant expressly or by implication, that the actual amount of work will correspond with those estimates. Payment will be made on the basis of the amount of work actually authorized by the Engineer.

1-09.7 Mobilization

(*COS GSP*)

Provided to Builders Exchange of WA, Inc. For usage Conditions Agreement see www.bxwa.com - Always Verify Scal

Section 1-09.7 is supplemented with the following:

Payment will be made for the following bid item:

Mobilization	**Per Lump Sum**

Mobilization shall include, but not be limited to, the following items: the movement of the Contractor's personnel, equipment, supplies, and incidentals to the project site; the establishment of his office, buildings, and other facilities necessary for work on the project; providing sanitary facilities for the Contractor's personnel; obtaining permits or licenses required to complete the project not furnished by the City; and other work and operations which must be performed or costs that must be incurred.

1-09.9 Payments

(July 8, 2024, APWA GSP, Option B)

Delete the fourth paragraph and replace it with the following:

Progress payments for completed work and material on hand will be based upon progress estimates prepared by the Engineer. A progress estimate cutoff date will be established at the preconstruction conference.

The initial progress estimate will be made not later than 30 days after the Contractor commences the work, and successive progress estimates will be made every month thereafter until the Completion Date. Progress estimates made during progress of the work are tentative, and made only for the purpose of determining progress payment. The progress estimates are subject to change at any time prior to the calculation of the Final Payment.

The value of the progress estimate will be the sum of the following:

1. Unit Price Items in the Bid Form — the approximate quantity of acceptable units of work completed multiplied by the unit price.
2. Lump Sum Items in the Bid Form — based on the approved Contractor's lump sum breakdown for that item, or absent such a breakdown, based on the Engineer's determination.
3. Materials on Hand — 100 percent of invoiced cost of material delivered to Job site or other storage area approved by the Engineer.
4. Change Orders — entitlement for approved extra cost or completed extra work as determined by the Engineer.

Progress payments will be made in accordance with the progress estimate less:

1. Retainage per Section 1-09.9(1), on non FHWA-funded projects;
2. The amount of Progress Payments previously made; and
3. Funds withheld by the Contracting Agency for disbursement in accordance with the Contract Documents.

Provided to Builders Exchange of WA, Inc. For usage Conditions Agreement see www.bxwa.com - Always Verify Scal

Progress payments for work performed shall not be evidence of acceptable performance or an admission by the Contracting Agency that any work has been satisfactorily completed. The determination of payments under the contract will be final in accordance with Section 1-05.1.

1-09.11 Disputes and Claims

1-09.11(3) Time Limitation and Jurisdiction

(December 30, 2022 APWA GSP)

Revise this section to read:

For the convenience of the parties to the Contract it is mutually agreed by the parties that all claims or causes of action which the Contractor has against the Contracting Agency arising from the Contract shall be brought within 180 calendar days from the date of final acceptance (Section 1-05.12) of the Contract by the Contracting Agency; and it is further agreed that all such claims or causes of action shall be brought only in the Superior Court of the county where the Contracting Agency headquarters is located, provided that where an action is asserted against a county, RCW 36.01.050 shall control venue and jurisdiction. The parties understand and agree that the Contractor's failure to bring suit within the time period provided, shall be a complete bar to all such claims or causes of action. It is further mutually agreed by the parties that when claims or causes of action which the Contractor asserts against the Contracting Agency arising from the Contract are filed with the Contracting Agency or initiated in court, the Contractor shall permit the Contracting Agency to have timely access to all records deemed necessary by the Contracting Agency to assist in evaluating the claims or action.

1-09.13 Claims Resolution

1-09.13(3) Arbitration

1-09.13(3)A Arbitration General

(January 19, 2022 APWA GSP)

Revise the third paragraph to read:

The Contracting Agency and the Contractor mutually agree to be bound by the decision of the arbitrator, and judgment upon the award rendered by the arbitrator may be entered in the Superior Court of the county in which the Contracting Agency's headquarters is located, provided that where claims subject to arbitration are asserted against a county, RCW 36.01.050 shall control venue and jurisdiction of the Superior Court. The decision of the arbitrator and the specific basis for the decision shall be in writing. The arbitrator shall use the Contract as a basis for decisions.

1-09.13(4) Venue for Litigation

(December 30, 2022 APWA GSP)

Revise this section to read:

Provided to Builders Exchange of WA, Inc. For usage Conditions Agreement see www.bxwa.com - Always Verify Scal

Litigation shall be brought in the Superior Court of the county in which the Contracting Agency's headquarters is located, provided that where claims are asserted against a county, RCW 36.01.050 shall control venue and jurisdiction of the Superior Court. It is mutually agreed by the parties that when litigation occurs, the Contractor shall permit the Contracting Agency to have timely access to all records deemed necessary by the Contracting Agency to assist in evaluating the claims or action.

1-10 Temporary Traffic Control

1-10.2 Traffic Control Management

1-10.2(1) General

Section 1-10.2(1) is supplemented with the following:

(*October 3, 2022 WSDOT GSP*)

The Traffic Control Supervisor shall be certified by one of the following:

The Northwest Laborers-Employers Training Trust
27055 Ohio Ave.
Kingston, WA 98346
(360) 297-3035
https://www.nwlett.edu

Evergreen Safety Council
12545 135th Ave. NE
Kirkland, WA 98034-8709
1-800-521-0778
https://www.esc.org

The American Traffic Safety Services Association
15 Riverside Parkway, Suite 100
Fredericksburg, Virginia 22406-1022
Training Dept. Toll Free (877) 642-4637
Phone: (540) 368-1701
https://atssa.com/training

Integrity Safety
13912 NE 20th Ave.
Vancouver, WA 98686
(360) 574-6071
https://www.integritysafety.com

US Safety Alliance
(904) 705-5660
https://www.ussafetyalliance.com

K&D Services Inc.
2719 Rockefeller Ave.
Everett, WA 98201
(800) 343-4049

Provided to Builders Exchange of WA, Inc. For usage Conditions Agreement see www.bxwa.com - Always Verify Scal

https://www.kndservices.net

1-10.5 Payment

Lump Sum Bid for Project (No Unit Items)

In Section 1-10.5(1), the paragraph following the bid item "Project Temporary Traffic Control", lump sum is revised to read:

(November 4, 2024 WSDOT GSP)
The lump sum Contract payment shall be full compensation for all costs incurred by the Contractor in performing the Contract Work defined in Section 1-10 except for costs compensated by Bid Proposal items reinstated as described in Section 1-10.5(3).

END OF DIVISION 1

Provided to Builders Exchange of WA, Inc. For usage Conditions Agreement see www.bxwa.com - Always Verify Scal

Division 2
Earthwork

2-02 Removal of Structures and Obstructions

2-02.1 Description

Section 2-02.1 is supplemented with the following:

The Work includes removal of curb, curb and gutter, and cement concrete sidewalk.

2-02.3 Construction Requirements

Section 2-02.3 is supplemented with the following:

2-02.3(3) Removal of Pavement, Sidewalks, Curbs, and Gutters

Section 2-02.3(3) is supplemented with the following:

All full-depth sawcuts shall be continuous, and shall be made with saws specifically equipped for the purpose. No skip cutting or jack hammering will be allowed unless specifically approved otherwise in writing by the Engineer. The location of all pavement cuts shall be where shown in the Plans or as approved by the Engineer in the field before cutting commences.

The approximate thickness of the asphalt concrete pavement is

***
271st St NW – 6" to 10"
***

All sawcutting performed in the Contract shall provide for and include removal and disposal of slurry created from water cooling/lubrication, in accordance with the Washington State Department of Ecology regulations. Waste material (slurry) shall not be allowed to enter drainage systems, ditches, or streams.

Removal of Cement Concrete Curbs, Curbs and Gutters and Sidewalk

The Contractor shall use a sawcut to delineate concrete curbing, gutters, and sidewalk to be removed from curbs, gutters, and sidewalk to remain. The Contractor shall take care to avoid damaging adjacent curbs, gutters, and sidewalk to remain. Any damage caused to the curbs, gutters, and sidewalk to remain, as a result of the Contractor's operations, shall be repaired to the satisfaction of the Engineer at no additional cost to the Contracting Agency.

Removal of Drainage Structures and Pipes

Where shown in the Plans, or at other locations as determined by the Engineer, the Contractor shall remove catch basins, regardless of the size or type, and storm drain pipe. Each catch basin or storm drain pipe shall be removed in its entirety. Where pipe removal is not required for the construction of the new drainage system, the existing pipe may be abandoned in place. Locations of abandonment shall be confirmed by the Engineer.

Provided to Builders Exchange of WA, Inc. For usage Conditions Agreement see www.bxwa.com - Always Verify Scal

Pipe removal shall include removal of caps, flanges, fittings, and associated components.

Voids left by catch basin or storm drain pipe removal shall be backfilled and compacted in accordance with Section 2-03.3(14)C.

All materials removed shall become the property of the Contractor and shall be disposed of outside the project limits.

2-02.4 Measurement

Section 2-02.4 is supplemented with the following:

Removing cement concrete curb and gutter will be measured by the linear foot along the line and slope of the existing curb and gutter, if present, prior to removal.

Removing cement concrete sidewalk will be measured by the square yard, exclusive of adjacent curbs and gutters and/or asphalt.

Sawcutting existing pavement will be measured by the linear foot. Measurement will occur once, regardless of the number of passes required to sawcut to the depth required to accomplish the removal.

Removal of existing drainage pipe will be measured by the linear foot along the line and slope of the drainage pipe prior to removal.

Removal of drainage Structures will be measured per each for each drainage Structure removed.

2-02.5 Payment

Section 2-02.5 is supplemented with the following:

"Removing Cement Conc. Curb and Gutter", per linear foot.
The unit Contract price per linear foot for "Removing Cement Conc. Curb and Gutter" shall be full compensation for performing the Work as specified, including disposal.

"Removing Cement Conc. Sidewalk", per square yard.
The unit Contract price per linear foot for "Removing Cement Conc. Sidewalk" shall be full compensation for performing the Work as specified, including disposal.

"Sawcutting Existing Pavement", per linear foot.
The unit Contract price per linear foot for "Sawcutting Existing Pavement" shall be full pay for all labor, material, tools, and equipment necessary to satisfactorily complete the Work as defined in the Contract Plans and these Special Provisions. No measurement will be made for sawcutting when sawcutting is paid for as part of the unit price of other pay items or for additional cuts within the removal limits not shown in the Site Preparation and TESC Plans.

"Removing Existing Drainage Pipe", per linear foot.

Provided to Builders Exchange of WA, Inc. For usage Conditions Agreement see www.bxwa.com - Always Verify Scal

The unit Contract price per linear foot for "Removing Existing Drainage Pipe" shall be full pay for performing the Work as specified, including sawcutting and disposal, and abandonment of pipe, including cutting and capping.

"Removing Drainage Structure", per each.
The unit Contract price per each for "Removing Drainage Structure" shall be full pay to perform the Work as specified, including completely removing items, furnishing and placing backfill material, compacting the voids, sawcutting, and disposing of the items.

2-10 Vacant

Section 2-10, including title, is replaced with the following:

2-10 Geogrid Reinforcement of Subgrade

2-10.1 Description

This section describes the geogrid reinforcement of roadway and utility subgrade and similar installations. Design details for geogrid reinforcement, such as geogrid type and placement, shall be as shown in the Plans. Work consists of:

1. Furnishing geogrids as specified herein and shown in the Plans.
2. Storing, cutting, and placing geogrids in accordance with these Specifications and in reasonably close conformity with the lines, grades, and dimensions shown in the Plans or as established by the Engineer.

The Contractor shall also adhere to the following Sections as they apply to the specific Work:

1. Section 2-01 Clearing, Grubbing, and Roadside Cleanup
2. Section 2-06 Subgrade Preparation
3. Section 4-04 Ballast and Crushed Surfacing

2-10.1(1) References

American Association of State Highway and Transportation Officials (AASHTO)

1. AASHTO Recommended Practice for Geosynthetic Reinforcement of the Aggregate Base Course of Flexible Pavement Structures, AASHTO PP46-01, April 2001 Interim Edition of the AASHTO Provisional Standards.
2. Standard Specification for Highway Bridges (1997 Interim)
3. AASHTO Guide for Design of Pavement Structures (1993)

American Society for Testing and Materials (ASTM)

1. D1388-96 – Standard Test Method for Stiffness of Fabrics, Option A, "Heart Loop"

Geosynthetic Research Institute (GRI)

1. GRI-GG2-87 – Standard Test Method for Geogrid Junction Strength
2. GRI-GG1-87- Standard Test Method for Geogrid Rib Tensile Strength

International Standards Organization (ISO)

1. ISO 10319:1996 Wide width Tensile Tests, Radial stiffness determined from tensile stiffness measured in any in-plane axis
2. ISO 13434:1999 Guidelines for the Assessment of Durability of Geosynthetics

Provided to Builders Exchange of WA, Inc. For usage Conditions Agreement see www.bxwa.com - Always Verify Scal

3. ISO 12960 Resistance to loss of load capacity when subjected to chemically aggressive environments as part of a durability assessment in accordance with ISO 13434:1999 7.3

European Standards (EN)

1. EN 12224 Weathering Resistance-Resistance to loss of load capacity when subjected to ultra-violet light and weathering assessment in accordance with ISO 13434:1999 7.2

U.S. Army Corps of Engineers (USACE)

1. Draft Specification for Grid Aperture Stability by In-Plane Rotation
2. CW-02215 Determination of Percent Open Area.

American Society of Civil Engineers (ASCE)

1. Giroud, J.P., and Han, J. (2004). "Design method for geogrid-reinforced unpaved roads. Part I – Development of design method." Journal of Geotechnical and Geoenvironmental Engineering, 130 (8), 775-786.
2. Giroud, J.P., and Han, J. (2004). "Design method for geogrid-reinforced unpaved roads. Part II – Calibration and applications." Journal of Geotechnical and Geoenvironmental Engineering, 130 (8), 787-797.

2-10.1(2) Definitions

Geogrid – A polymeric grid formed by a regular network of integrally connected, multi-directional tensile elements of appropriate orientation, size and shape with triangular apertures of appropriate size and shape to allow interlocking with surrounding soil, rock, or earth to function primarily as reinforcement.

Radial Stiffness – determined from tensile stiffness measured in any in-plane axis from testing in accordance with the scope of ISO 10319:1996.

Junction Strength – Breaking tensile strength of junctions when tested in accordance with GRI-GG2 as modified by AASHTO Standard Specification for Highway Bridges, 1997 Interim, using a single rib having the greater of 3 junctions or 8 inches and tested at a strain rate of 10 percent per minute based on this gauge length.

Aperture Stability Modulus (also known as **Torsional Rigidity** or **Torsional Stiffness**) – Resistance to in-plane rotational movement measured by applying a 5 kg-cm (2.0 m-N) moment to the central junction of a 9-inch by 9-inch specimen restrained at its perimeter.

2-10.2 Materials

Structure Soil Reinforcement Geogrid – The geogrid shall consist of a multi axial geogrid that is integrally formed and deployed as a single layer having the following characteristics:

Index Properties	Longitudinal	Diagonal	Transverse	General
Rib pitch, mm (in)	40 (1.60)	40 (1.60)	-	
Mid-rib depth, mm (in)	-	2.0 (0.08)	1.6 (0.06)	
Mid-rib width, mm (in)	-	1.0 (0.04)	1.3 (0.05)	
Nodal thickness, mm (in)				3.1 (0.12)
Rib shape				rectangular

Provided to Builders Exchange of WA, Inc. For usage Conditions Agreement see www.bxwa.com - Always Verify Scal

Aperture shape	triangular
Rib Aspect Ratio (height: width)	> 1.0
Structural Integrity	
Junction efficiency,[1] %	93
Aperture stability,[2] kg-cm/deg @ 5.0kg-cm	3.6
Radial stiffness at low strain,[3] kN/m @ 0.5% strain	300
Radial stiffness at low strain,[3] (lb/ft @ 0.5% strain)	20,580
Durability	
Resistance to chemical degradation[4]	100%
Resistance to ultra-violet light and weathering[5]	100%

Notes:

1. Load transfer capability determined in accordance with GRI-GG2-87 and GRI-GG1-87 and expressed as a percentage of ultimate tensile strength.
2. In-plane torsional rigidity measured by applying a moment to the central junction of a 225mm x 225mm specimen restrained at its perimeter in accordance with U.S. Army Corps of Engineers Methodology for Measurement of Torsional Rigidity, (Kinney, T.C. Aperture stability Modulus ref 3, 3-1-2000).
3. Radial stiffness is determined from tensile stiffness measured in any in-plane axis from testing in accordance with the scope of ISO 10319:1996.
4. Resistance to loss of load capacity when subjected to chemically aggressive environments in accordance with testing to ISO12960 as part of a durability assessment in accordance with ISO13434:1999 7.3
5. Resistance to loss of load capacity when subjected to ultra-violet light and weathering in accordance with testing to EN12224 as part of a durability assessment in accordance with ISO13434:1999 7.2
6. All dimensions and values are typical unless otherwise stated.

Alternate Structural Soil Reinforcement Materials – Alternate structural soil reinforcement materials will be considered if submitted at least 15 days prior to bid letting in accordance with the following conditions:

1. Geotextile materials shall not be considered as an alternate to geogrid materials for subgrade improvement or base/subbase reinforcement applications. A geotextile may be used in the cross-section to provide separation, filtration or drainage; however, no structural contribution shall be attributed to the geotextile.
2. Alternate geogrid materials shall not be used unless submitted to and pre-approved in writing by the Engineer. Consideration of alternate geogrid products will not be evaluated based solely upon index and strength properties outlined in this specification. In the event that material index properties of an alternate product do not satisfy the requirements set forward in this specification, then a separate design incorporating the alternate geogrid

Provided to Builders Exchange of WA, Inc. For usage Conditions Agreement see www.bxwa.com - Always Verify Scal

product must be submitted for approval by the Engineer. Submittal packages for alternate geogrid materials must be in the form of an engineered design certified by a licensed professional engineer. Submittal must include, but not limited to, the following items:

a. Design pavement/unpaved surface typical section including the alternate geogrid product.
b. Letter summary of the alternate design describing the basis for design sealed by a licensed professional engineer.
c. Research documentation of relevant and comparable full-scale evidence which quantifies the performance of the alternate geogrid material with repetitive loading applied by a passing wheel load of at least 4,500 pounds per single wheel or 9,000 pounds per dual wheel.
d. A list of 5 comparable projects that are similar in terms of size and application, are located in the United States, and where the results of using the specific alternate geogrid material can be verified after a minimum of 1 year of service life.
e. A sample (meeting the requirements of sub-part 1.05A of this Section) of the alternate geogrid material and certified specification sheets.
f. Recommended installation instructions.
g. Additional information as requested by the Engineer to fully evaluate the product.

2-10.3 Construction Requirements

2-10.3(1) Submittals

The Contractor's submittals shall include:

1. A geogrid product data sheet and certification from the Manufacturer that the geogrid product supplied meets the requirements of Section 2.10.2 of these Special Provisions.
2. The Manufacturer's installation instructions and general recommendations.

2-10.3(2) Delivery, Storage, and Handling

For Storage and Protection, the Contractor shall:

1. Prevent excessive mud, wet concrete, epoxy, or other deleterious materials from coming in contact with and affixing to the geogrid materials.
2. Store the geogrid materials at temperatures above -20 degrees F (-29 degrees C).
3. Rolled geogrid materials may be laid flat or stood on end.
4. Geogrid materials should not be left directly exposed to sunlight for a period longer than the period recommended by the manufacturer.

The Contractor shall check the geogrid upon delivery to verify that the proper material has been received. The geogrid shall be inspected by the Contractor to be free of flaws or damage occurring during manufacturing, shipping, or handling.

2-10.3(3) Installation

The geogrid shall be laid at the proper elevation and alignment as shown in the Plans.

The geogrid shall be installed in accordance with the installation guidelines provided by the manufacturer or as directed by the Engineer.

Provided to Builders Exchange of WA, Inc. For usage Conditions Agreement see www.bxwa.com - Always Verify Scal

The geogrid may be temporarily secured in place with ties, staples, pins, sand bags or backfill as required by fill properties, fill placement procedures or weather conditions or as directed by the Engineer.

2-10.3(4) Granular Fill Placement over Geogrid

Granular fill material shall be placed in lifts and compacted as directed under Section 2-09 of the Standard Specifications. Granular fill material shall be placed, spread, and compacted in such a manner that minimizes the development of wrinkles in the geogrid and/or movement of the geogrid.

A minimum loose fill thickness of 6 inches is required prior to operation of tracked vehicles over the geogrid. Turning of tracked vehicles should be kept to a minimum to prevent tracks from displacing the fill and damaging the geogrid. When underlying substrate is trafficable with minimal rutting, rubber-tired equipment may pass over the geogrid reinforcement at slow speeds (less than 5 mph). Sudden braking and sharp turning movements shall be avoided.

2-10.3(5) Inspection

The Owner or Owner's representative may randomly inspect the geogrid before, during and after (using test pits) installation.

Any damaged or defective geogrid (i.e. frayed coating, separated junctions, separated layers, tears, etc.) will be repaired/replaced in accordance with Section 3.06 of the Standard Specifications.

2-10.3(6) Repair

Any roll of geogrid damaged before, during and after installation shall be replaced by the Contractor at no additional cost to the Owner.

Proper replacement shall consist of replacing the affected area adding 3 feet (1 meter) of geogrid beyond the limits of the affected area.

2-10.3(7) Protection

Follow the Manufacturer's recommendations regarding protection from exposure to sunlight.

2-10.4 Measurement

Geogrid reinforcement for subgrade will be measured by the square yard of area completed in place.

2-10.5 Payment

"Triaxial Geogrid Reinforcement for Subgrade", per square yard.

The unit Contract price per square yard for "Triaxial Geogrid Reinforcement for Subgrade" shall be full pay for all Work to complete the installation, including labor, materials, equipment, storage, and protection.

END OF DIVISION 2

Provided to Builders Exchange of WA, Inc. For usage Conditions Agreement see www.bxwa.com - Always Verify Scal

Division 5
Surface Treatments and Pavements

5-04 Hot Mix Asphalt

(January 31, 2023 APWA GSP)

Delete Section 5-04, Hot Mix Asphalt, and replace it with the following:

5-04.1 Description

This Work shall consist of providing and placing one or more layers of plant-mixed hot mix asphalt (HMA) on a prepared foundation or base in accordance with these Specifications and the lines, grades, thicknesses, and typical cross-sections shown in the Plans. The manufacture of HMA may include warm mix asphalt (WMA) processes in accordance with these Specifications. WMA processes include organic additives, chemical additives, and foaming.

HMA shall be composed of asphalt binder and mineral materials as may be required, mixed in the proportions specified to provide a homogeneous, stable, and workable mixture.

5-04.2 Materials

Materials shall meet the requirements of the following sections:

Asphalt Binder	9-02.1(4)
Cationic Emulsified Asphalt	9-02.1(6)
Anti-Stripping Additive	9-02.4
HMA Additive	9-02.5
Aggregates	9-03.8
Recycled Asphalt Pavement (RAP)	9-03.8(3)B, 9-03.21
Reclaimed Asphalt Shingles (RAS)	9-03.8(3)B, 9-03.21
Mineral Filler	9-03.8(5)
Recycled Material	9-03.21

The Contract documents may establish that the various mineral materials required for the manufacture of HMA will be furnished in whole or in part by the Contracting Agency. If the documents do not establish the furnishing of any of these mineral materials by the Contracting Agency, the Contractor shall be required to furnish such materials in the amounts required for the designated mix. Mineral materials include coarse and fine aggregates, and mineral filler.

The Contractor may choose to utilize recycled asphalt pavement (RAP) in the production of HMA. The RAP may be from pavements removed under the Contract, if any, or pavement material from an existing stockpile.

The Contractor may use up to 20 percent RAP by total weight of HMA with no additional sampling or testing of the RAP.

Provided to Builders Exchange of WA, Inc. For usage Conditions Agreement see www.bxwa.com - Always Verify Scal

If the Contractor wishes to utilize High RAP/Any RAS, the design must be listed on the WSDOT Qualified Products List (QPL).

The grade of asphalt binder shall be as required by the Contract. Blending of asphalt binder from different sources is not permitted.

The Contractor may only use warm mix asphalt (WMA) processes in the production of HMA with 20 percent or less RAP by total weight of HMA. The Contractor shall submit to the Engineer for approval the process that is proposed and how it will be used in the manufacture of HMA.

Production of aggregates shall comply with the requirements of Section 3-01. Preparation of stockpile site, the stockpiling of aggregates, and the removal of aggregates from stockpiles shall comply with the requirements of Section 3-02.

5-04.2(1) How to Get an HMA Mix Design on the QPL

If the Contractor wishes to submit a mix design for inclusion in the Qualified Products List (QPL), please follow the WSDOT process outlined in Standard Specification 5-04.2(1).

5-04.2(1)A Vacant

5-04.2(2) Mix Design - Obtaining Project Approval

No paving shall begin prior to the approval of the mix design by the Engineer.

Nonstatistical evaluation will be used for all HMA not designated as Commercial HMA in the Contract documents.

Commercial evaluation will be used for Commercial HMA and for other classes of HMA in the following applications: sidewalks, road approaches, ditches, slopes, paths, trails, gores, prelevel, temporary pavement, and pavement repair. Other nonstructural applications of HMA accepted by commercial evaluation shall be as approved by the Project Engineer. Sampling and testing of HMA accepted by commercial evaluation will be at the option of the Project Engineer. The Proposal quantity of HMA that is accepted by commercial evaluation will be excluded from the quantities used in the determination of nonstatistical evaluation.

Nonstatistical Mix Design. Fifteen days prior to the first day of paving the Contractor shall provide one of the following mix design verification certifications for Contracting Agency review;

- The WSDOT Mix Design Evaluation Report from the current WSDOT QPL, or one of the mix design verification certifications listed below.
- The proposed HMA mix design on WSDOT Form 350-042 with the seal and certification (stamp & signature) of a valid licensed Washington State Professional Engineer.
- The Mix Design Report for the proposed HMA mix design developed by a qualified City or County laboratory that is within one year of the approval date.

Provided to Builders Exchange of WA, Inc. For usage Conditions Agreement see www.bxwa.com - Always Verify Scal

The mix design shall be performed by a lab accredited by a national authority such as Laboratory Accreditation Bureau, L-A-B for Construction Materials Testing, The Construction Materials Engineering Council (CMEC's) ISO 17025 or AASHTO Accreditation Program (AAP) and shall supply evidence of participation in the AASHTO: resource proficiency sample program.

Mix designs for HMA accepted by Nonstatistical evaluation shall:

- Be designed for ***$$1$$*** million equivalent single axle loads (ESALs).
- Have the aggregate structure and asphalt binder content determined in accordance with WSDOT Standard Operating Procedure 732 and meet the requirements of Sections 9-03.8(2), except that Hamburg testing for ruts and stripping are at the discretion of the Engineer, and 9-03.8(6).
- Have anti-strip requirements, if any, for the proposed mix design determined in accordance with AASHTO T 283 or T 324 or based on historic anti-strip and aggregate source compatibility from previous WSDOT lab testing.

At the discretion of the Engineer, agencies may accept verified mix designs older than 12 months from the original verification date with a certification from the Contractor that the materials and sources are the same as those shown on the original mix design.

Commercial Evaluation Mix Design. Approval of a mix design for "Commercial Evaluation" will be based on a review of the Contractor's submittal of WSDOT Form 350-042 (for commercial mixes, AASHTO T 324 evaluation is not required) or a Mix Design from the current WSDOT QPL or from one of the processes allowed by this section. Testing of the HMA by the Contracting Agency for mix design approval is not required.

For the Bid Item Commercial HMA, the Contractor shall select a class of HMA and design level of ESALs appropriate for the required use.

5-04.2(2)B Using Warm Mix Asphalt Processes

The Contractor may elect to use additives that reduce the optimum mixing temperature or serve as a compaction aid for producing HMA. Additives include organic additives, chemical additives and foaming processes. The use of Additives is subject to the following:

- Do not use additives that reduce the mixing temperature more than allowed in Section 5-04.3(6) in the production of mixtures.
- Before using additives, obtain the Engineer's approval using WSDOT Form 350-076 to describe the proposed additive and process.

5-04.3 Construction Requirements

5-04.3(1) Weather Limitations

Do not place HMA for wearing course on any Traveled Way beginning October 1st through March 31st of the following year without written concurrence from the Engineer.

Provided to Builders Exchange of WA, Inc. For usage Conditions Agreement see www.bxwa.com - Always Verify Scal

Do not place HMA on any wet surface, or when the average surface temperatures are less than those specified below, or when weather conditions otherwise prevent the proper handling or finishing of the HMA.

Minimum Surface Temperature for Paving

Compacted Thickness (Feet)	Wearing Course	Other Courses
Less than 0.10	55°F	45°F
0.10 to .20	45°F	35°F
More than 0.20	35°F	35°F

5-04.3(2) Paving Under Traffic

When the Roadway being paved is open to traffic, the requirements of this Section shall apply.

The Contractor shall keep intersections open to traffic at all times except when paving the intersection or paving across the intersection. During such time, and provided that there has been an advance warning to the public, the intersection may be closed for the minimum time required to place and compact the mixture. In hot weather, the Engineer may require the application of water to the pavement to accelerate the finish rolling of the pavement and to shorten the time required before reopening to traffic.

Before closing an intersection, advance warning signs shall be placed, and signs shall also be placed marking the detour or alternate route.

During paving operations, temporary pavement markings shall be maintained throughout the project. Temporary pavement markings shall be installed on the Roadway prior to opening to traffic. Temporary pavement markings shall be in accordance with Section 8-23.

All costs in connection with performing the Work in accordance with these requirements, except the cost of temporary pavement markings, shall be included in the unit Contract prices for the various Bid items involved in the Contract.

5-04.3(3) Equipment

5-04.3(3)A Mixing Plant

Plants used for the preparation of HMA shall conform to the following requirements:

1. **Equipment for Preparation of Asphalt Binder** – Tanks for the storage of asphalt binder shall be equipped to heat and hold the material at the required temperatures. The heating shall be accomplished by steam coils, electricity, or other approved means so that no flame shall be in contact with the storage tank. The circulating system for the

Provided to Builders Exchange of WA, Inc. For usage Conditions Agreement see www.bxwa.com - Always Verify Scal

asphalt binder shall be designed to ensure proper and continuous circulation during the operating period. A valve for the purpose of sampling the asphalt binder shall be placed in either the storage tank or in the supply line to the mixer.

2. **Thermometric Equipment** – An armored thermometer, capable of detecting temperature ranges expected in the HMA mix, shall be fixed in the asphalt binder feed line at a location near the charging valve at the mixer unit. The thermometer location shall be convenient and safe for access by Inspectors. The plant shall also be equipped with an approved dial-scale thermometer, a mercury actuated thermometer, an electric pyrometer, or another approved thermometric instrument placed at the discharge chute of the drier to automatically register or indicate the temperature of the heated aggregates. This device shall be in full view of the plant operator.

3. **Heating of Asphalt Binder** – The temperature of the asphalt binder shall not exceed the maximum recommended by the asphalt binder manufacturer nor shall it be below the minimum temperature required to maintain the asphalt binder in a homogeneous state. The asphalt binder shall be heated in a manner that will avoid local variations in heating. The heating method shall provide a continuous supply of asphalt binder to the mixer at a uniform average temperature with no individual variations exceeding 25°F. Also, when a WMA additive is included in the asphalt binder, the temperature of the asphalt binder shall not exceed the maximum recommended by the manufacturer of the WMA additive.

4. **Sampling and Testing of Mineral Materials** – The HMA plant shall be equipped with a mechanical sampler for the sampling of the mineral materials. The mechanical sampler shall meet the requirements of Section 1-05.6 for the crushing and screening operation. The Contractor shall provide for the setup and operation of the field-testing facilities of the Contracting Agency as provided for in Section 3-01.2(2).

5. **Sampling HMA** – The HMA plant shall provide for sampling HMA by one of the following methods:

    a. A mechanical sampling device attached to the HMA plant.

    b. Platforms or devices to enable sampling from the hauling vehicle without entering the hauling vehicle.

5-04.3(3)B Hauling Equipment

Trucks used for hauling HMA shall have tight, clean, smooth metal beds and shall have a cover of canvas or other suitable material of sufficient size to protect the mixture from adverse weather. Whenever the weather conditions during the work shift include, or are forecast to include precipitation or an air temperature less than 45°F or when time from loading to unloading exceeds 30 minutes, the cover shall be securely attached to protect the HMA.

The Contractor shall provide an environmentally benign means to prevent the HMA mixture from adhering to the hauling equipment. Excess release agent shall be drained prior to filling hauling equipment with HMA. Petroleum derivatives or other coating material that

Provided to Builders Exchange of WA, Inc. For usage Conditions Agreement see www.bxwa.com - Always Verify Scal

contaminate or alter the characteristics of the HMA shall not be used. For live bed trucks, the conveyer shall be in operation during the process of applying the release agent.

5-04.3(3)C Pavers

HMA pavers shall be self-contained, power-propelled units, provided with an internally heated vibratory screed and shall be capable of spreading and finishing courses of HMA plant mix material in lane widths required by the paving section shown in the Plans.

The HMA paver shall be in good condition and shall have the most current equipment available from the manufacturer for the prevention of segregation of the HMA mixture installed, in good condition, and in working order. The equipment certification shall list the make, model, and year of the paver and any equipment that has been retrofitted.

The screed shall be operated in accordance with the manufacturer's recommendations and shall effectively produce a finished surface of the required evenness and texture without tearing, shoving, segregating, or gouging the mixture. A copy of the manufacturer's recommendations shall be provided upon request by the Contracting Agency. Extensions will be allowed provided they produce the same results, including ride, density, and surface texture as obtained by the primary screed. Extensions without augers and an internally heated vibratory screed shall not be used in the Traveled Way.

When specified in the Contract, reference lines for vertical control will be required. Lines shall be placed on both outer edges of the Traveled Way of each Roadway. Horizontal control utilizing the reference line will be permitted. The grade and slope for intermediate lanes shall be controlled automatically from reference lines or by means of a mat referencing device and a slope control device. When the finish of the grade prepared for paving is superior to the established tolerances and when, in the opinion of the Engineer, further improvement to the line, grade, cross-section, and smoothness can best be achieved without the use of the reference line, a mat referencing device may be substituted for the reference line. Substitution of the device will be subject to the continued approval of the Engineer. A joint matcher may be used subject to the approval of the Engineer. The reference line may be removed after the completion of the first course of HMA when approved by the Engineer. Whenever the Engineer determines that any of these methods are failing to provide the necessary vertical control, the reference lines will be reinstalled by the Contractor.

The Contractor shall furnish and install all pins, brackets, tensioning devices, wire, and accessories necessary for satisfactory operation of the automatic control equipment.

If the paving machine in use is not providing the required finish, the Engineer may suspend Work as allowed by Section 1-08.6. Any cleaning or solvent type liquids spilled on the pavement shall be thoroughly removed before paving proceeds.

5-04.3(3)D Material Transfer Device or Material Transfer Vehicle

A Material Transfer Device/Vehicle (MTD/V) shall only be used with the Engineer's approval, unless otherwise required by the Contract.

Provided to Builders Exchange of WA, Inc. For usage Conditions Agreement see www.bxwa.com - Always Verify Scal

Where an MTD/V is required by the Contract, the Engineer may approve paving without an MTD/V, at the request of the Contractor. The Engineer will determine if an equitable adjustment in cost or time is due.

When used, the MTD/V shall mix the HMA after delivery by the hauling equipment and prior to laydown by the paving machine. Mixing of the HMA shall be sufficient to obtain a uniform temperature throughout the mixture. If a windrow elevator is used, the length of the windrow may be limited in urban areas or through intersections, at the discretion of the Engineer.

To be approved for use, an MTV:

1. Shall be self-propelled vehicle, separate from the hauling vehicle or paver.

2. Shall not be connected to the hauling vehicle or paver.

3. May accept HMA directly from the haul vehicle or pick up HMA from a windrow.

4. Shall mix the HMA after delivery by the hauling equipment and prior to placement into the paving machine.

5. Shall mix the HMA sufficiently to obtain a uniform temperature throughout the mixture.

To be approved for use, an MTD:

1. Shall be positively connected to the paver.

2. May accept HMA directly from the haul vehicle or pick up HMA from a windrow.

3. Shall mix the HMA after delivery by the hauling equipment and prior to placement into the paving machine.

4. Shall mix the HMA sufficiently to obtain a uniform temperature throughout the mixture.

5-04.3(3)E Rollers

Rollers shall be of the steel wheel, vibratory, oscillatory, or pneumatic tire type, in good condition and capable of reversing without backlash. Operation of the roller shall be in accordance with the manufacturer's recommendations. When ordered by the Engineer for any roller planned for use on the project, the Contractor shall provide a copy of the manufacturer's recommendation for the use of that roller for compaction of HMA. The number and weight of rollers shall be sufficient to compact the mixture in compliance with the requirements of Section 5-04.3(10). The use of equipment that results in crushing of the aggregate will not be permitted. Rollers producing pickup, washboard, uneven compaction of the surface, displacement of the mixture or other undesirable results shall not be used.

Provided to Builders Exchange of WA, Inc. For usage Conditions Agreement see www.bxwa.com - Always Verify Scal

5-04.3(4) Preparation of Existing Paved Surfaces

When the surface of the existing pavement or old base is irregular, the Contractor shall bring it to a uniform grade and cross-section as shown on the Plans or approved by the Engineer.

Preleveling of uneven or broken surfaces over which HMA is to be placed may be accomplished by using an asphalt paver, a motor patrol grader, or by hand raking, as approved by the Engineer.

Compaction of preleveling HMA shall be to the satisfaction of the Engineer and may require the use of small steel wheel rollers, plate compactors, or pneumatic rollers to avoid bridging across preleveled areas by the compaction equipment. Equipment used for the compaction of preleveling HMA shall be approved by the Engineer.

Before construction of HMA on an existing paved surface, the entire surface of the pavement shall be clean. All fatty asphalt patches, grease drippings, and other objectionable matter shall be entirely removed from the existing pavement. All pavements or bituminous surfaces shall be thoroughly cleaned of dust, soil, pavement grindings, and other foreign matter. All holes and small depressions shall be filled with an appropriate class of HMA. The surface of the patched area shall be leveled and compacted thoroughly. Prior to the application of tack coat, or paving, the condition of the surface shall be approved by the Engineer.

A tack coat of asphalt shall be applied to all paved surfaces on which any course of HMA is to be placed or abutted; except that tack coat may be omitted from clean, newly paved surfaces at the discretion of the Engineer. Tack coat shall be uniformly applied to cover the existing pavement with a thin film of residual asphalt free of streaks and bare spots at a rate between 0.02 and 0.10 gallons per square yard of retained asphalt. The rate of application shall be approved by the Engineer. A heavy application of tack coat shall be applied to all joints. For Roadways open to traffic, the application of tack coat shall be limited to surfaces that will be paved during the same working shift. The spreading equipment shall be equipped with a thermometer to indicate the temperature of the tack coat material.

Equipment shall not operate on tacked surfaces until the tack has broken and cured. If the Contractor's operation damages the tack coat it shall be repaired prior to placement of the HMA.

The tack coat shall be CSS-1, or CSS-1h emulsified asphalt. The CSS-1 and CSS-1h emulsified asphalt may be diluted once with water at a rate not to exceed one-part water to one-part emulsified asphalt. The tack coat shall have sufficient temperature such that it may be applied uniformly at the specified rate of application and shall not exceed the maximum temperature recommended by the emulsified asphalt manufacturer.

5-04.3(4)A Crack Sealing

When the Proposal includes a pay item for crack sealing, seal cracks in accordance with Section 5-03.

Provided to Builders Exchange of WA, Inc. For usage Conditions Agreement see www.bxwa.com - Always Verify Scal

5-04.3(4)B Vacant

5-04.3(4)C Pavement Repair

The Contractor shall excavate pavement repair areas and shall backfill these with HMA in accordance with the details shown in the Plans and as marked in the field. The Contractor shall conduct the excavation operations in a manner that will protect the pavement that is to remain. Pavement not designated to be removed that is damaged as a result of the Contractor's operations shall be repaired by the Contractor to the satisfaction of the Engineer at no cost to the Contracting Agency. The Contractor shall excavate only within one lane at a time unless approved otherwise by the Engineer. The Contractor shall not excavate more area than can be completely finished during the same shift, unless approved by the Engineer.

Unless otherwise shown in the Plans or determined by the Engineer, excavate to a depth of 1.0 feet. The Engineer will make the final determination of the excavation depth required. The minimum width of any pavement repair area shall be 40 inches unless shown otherwise in the Plans. Before any excavation, the existing pavement shall be sawcut or shall be removed by a pavement grinder. Excavated materials will become the property of the Contractor and shall be disposed of in a Contractor-provided site off the Right of Way or used in accordance with Sections 2-02.3(3) or 9-03.21.

Asphalt for tack coat shall be required as specified in Section 5-04.3(4). A heavy application of tack coat shall be applied to all surfaces of existing pavement in the pavement repair area.

Placement of the HMA backfill shall be accomplished in lifts not to exceed 0.35-foot compacted depth. Lifts that exceed 0.35-foot of compacted depth may be accomplished with the approval of the Engineer. Each lift shall be thoroughly compacted by a mechanical tamper or a roller.

5-04.3(5) Producing/Stockpiling Aggregates and RAP

Aggregates and RAP shall be stockpiled according to the requirements of Section 3-02. Sufficient storage space shall be provided for each size of aggregate and RAP. Materials shall be removed from stockpile(s) in a manner to ensure minimal segregation when being moved to the HMA plant for processing into the final mixture. Different aggregate sizes shall be kept separated until they have been delivered to the HMA plant.

5-04.3(5)A Vacant

5-04.3(6) Mixing

After the required amount of mineral materials, asphalt binder, recycling agent and anti-stripping additives have been introduced into the mixer the HMA shall be mixed until complete and uniform coating of the particles and thorough distribution of the asphalt binder throughout the mineral materials is ensured.

Provided to Builders Exchange of WA, Inc. For usage Conditions Agreement see www.bxwa.com - Always Verify Scal

When discharged, the temperature of the HMA shall not exceed the optimum mixing temperature by more than 25°F as shown on the reference mix design report or as approved by the Engineer. Also, when a WMA additive is included in the manufacture of HMA, the discharge temperature of the HMA shall not exceed the maximum recommended by the manufacturer of the WMA additive. A maximum water content of 2 percent in the mix, at discharge, will be allowed providing the water causes no problems with handling, stripping, or flushing. If the water in the HMA causes any of these problems, the moisture content shall be reduced as directed by the Engineer.

Storing or holding of the HMA in approved storage facilities will be permitted with approval of the Engineer, but in no event shall the HMA be held for more than 24 hours. HMA held for more than 24 hours after mixing shall be rejected. Rejected HMA shall be disposed of by the Contractor at no expense to the Contracting Agency. The storage facility shall have an accessible device located at the top of the cone or about the third point. The device shall indicate the amount of material in storage. No HMA shall be accepted from the storage facility when the HMA in storage is below the top of the cone of the storage facility, except as the storage facility is being emptied at the end of the working shift.

Recycled asphalt pavement (RAP) utilized in the production of HMA shall be sized prior to entering the mixer so that a uniform and thoroughly mixed HMA is produced. If there is evidence of the recycled asphalt pavement not breaking down during the heating and mixing of the HMA, the Contractor shall immediately suspend the use of the RAP until changes have been approved by the Engineer. After the required amount of mineral materials, RAP, new asphalt binder and asphalt rejuvenator have been introduced into the mixer the HMA shall be mixed until complete and uniform coating of the particles and thorough distribution of the asphalt binder throughout the mineral materials, and RAP is ensured.

5-04.3(7) Spreading and Finishing

The mixture shall be laid upon an approved surface, spread, and struck off to the grade and elevation established. HMA pavers complying with Section 5-04.3(3) shall be used to distribute the mixture. Unless otherwise directed by the Engineer, the nominal compacted depth of any layer of any course shall not exceed the following:

HMA Class 1”		0.35 feet
HMA Class ¾” and HMA Class ½”		
	wearing course	0.30 feet
	other courses	0.35 feet
HMA Class ⅜”		0.15 feet

On areas where irregularities or unavoidable obstacles make the use of mechanical spreading and finishing equipment impractical, the paving may be done with other equipment or by hand.

When more than one JMF is being utilized to produce HMA, the material produced for each JMF shall be placed by separate spreading and compacting equipment. The intermingling of HMA produced from more than one JMF is prohibited. Each strip of HMA placed during a

Provided to Builders Exchange of WA, Inc. For usage Conditions Agreement see www.bxwa.com - Always Verify Scal

work shift shall conform to a single JMF established for the class of HMA specified unless there is a need to make an adjustment in the JMF.

5-04.3(8) Aggregate Acceptance Prior to Incorporation in HMA

For HMA accepted by nonstatistical evaluation, the aggregate properties of sand equivalent, uncompacted void content, and fracture will be evaluated in accordance with Section 3-04. Sampling and testing of aggregates for HMA accepted by commercial evaluation will be at the option of the Engineer.

5-04.3(9) HMA Mixture Acceptance

Acceptance of HMA shall be as provided under nonstatistical, or commercial evaluation.

Nonstatistical evaluation will be used for the acceptance of HMA unless Commercial Evaluation is specified.

Commercial evaluation will be used for Commercial HMA and for other classes of HMA in the following applications: sidewalks, road approaches, ditches, slopes, paths, trails, gores, prelevel, temporary pavement, and pavement repair. Other nonstructural applications of HMA accepted by commercial evaluation shall be as approved by the Engineer. Sampling and testing of HMA accepted by commercial evaluation will be at the option of the Engineer.

The mix design will be the initial JMF for the class of HMA. The Contractor may request a change in the JMF. Any adjustments to the JMF will require the approval of the Engineer and may be made in accordance with this section.

HMA Tolerances and Adjustments

1. **Job Mix Formula Tolerances** – The constituents of the mixture at the time of acceptance shall be within tolerance. The tolerance limits will be established as follows:

   For Asphalt Binder and Air Voids (Va), the acceptance limits are determined by adding the tolerances below to the approved JMF values. These values will also be the Upper Specification Limit (USL) and Lower Specification Limit (LSL) required in Section 1-06.2(2)D2

Property	Non-Statistical Evaluation	Commercial Evaluation
Asphalt Binder	+/- 0.5%	+/- 0.7%
Air Voids, Va	2.5% min. and 5.5% max	N/A

   For Aggregates in the mixture:

   a. First, determine preliminary upper and lower acceptance limits by applying the following tolerances to the approved JMF.

Aggregate Percent Passing	Non-Statistical Evaluation	Commercial Evaluation
1", ¾", ½", and 3/8" sieves	+/- 6%	+/- 8%

Provided to Builders Exchange of WA, Inc. For usage Conditions Agreement see www.bxwa.com - Always Verify Scal

No. 4 sieve	+/-6%	+/- 8%
No. 8 Sieve	+/- 6%	+/-8%
No. 200 sieve	+/- 2.0%	+/- 3.0%

b. Second, adjust the preliminary upper and lower acceptance limits determined from step (a) the minimum amount necessary so that none of the aggregate properties are outside the control points in Section 9-03.8(6). The resulting values will be the upper and lower acceptance limits for aggregates, as well as the USL and LSL required in Section 1-06.2(2)D2.

2. Job Mix Formula Adjustments – An adjustment to the aggregate gradation or asphalt binder content of the JMF requires approval of the Engineer. Adjustments to the JMF will only be considered if the change produces material of equal or better quality and may require the development of a new mix design if the adjustment exceeds the amounts listed below.

a. **Aggregates** –2 percent for the aggregate passing the 1½″, 1″, ¾″, ½″, ⅜″, and the No. 4 sieves, 1 percent for aggregate passing the No. 8 sieve, and 0.5 percent for the aggregate passing the No. 200 sieve. The adjusted JMF shall be within the range of the control points in Section 9-03.8(6).

b. **Asphalt Binder Content** – The Engineer may order or approve changes to asphalt binder content. The maximum adjustment from the approved mix design for the asphalt binder content shall be 0.3 percent.

5-04.3(9)A Vacant

5-04.3(9)B Vacant

5-04.3(9)C Mixture Acceptance – Nonstatistical Evaluation

HMA mixture which is accepted by Nonstatistical Evaluation will be evaluated by the Contracting Agency by dividing the HMA tonnage into lots.

5-04.3(9)C1 Mixture Nonstatistical Evaluation – Lots and Sublots

A lot is represented by randomly selected samples of the same mix design that will be tested for acceptance. A lot is defined as the total quantity of material or work produced for each Job Mix Formula placed. Only one lot per JMF is expected. A sublot shall be equal to one day's production or 800 tons, whichever is less except that the final sublot will be a minimum of 400 tons and may be increased to 1200 tons.

All of the test results obtained from the acceptance samples from a given lot shall be evaluated collectively. If the Contractor requests a change to the JMF that is approved, the material produced after the change will be evaluated on the basis of the new JMF for the remaining sublots in the current lot and for acceptance of subsequent lots. For a lot in progress with a CPF less than 0.75, a new lot will begin at the Contractor's request after the Engineer is satisfied that material conforming to the Specifications can be produced.

Provided to Builders Exchange of WA, Inc. For usage Conditions Agreement see www.bxwa.com - Always Verify Scal

Sampling and testing for evaluation shall be performed on the frequency of one sample per sublot.

5-04.3(9)C2 Mixture Nonstatistical Evaluation Sampling

Samples for acceptance testing shall be obtained by the Contractor when ordered by the Engineer. The Contractor shall sample the HMA mixture in the presence of the Engineer and in accordance with AASH-TO T 168. A minimum of three samples should be taken for each class of HMA placed on a project. If used in a structural application, at least one of the three samples shall be tested.

Sampling and testing HMA in a structural application where quantities are less than 400 tons is at the discretion of the Engineer.

For HMA used in a structural application and with a total project quantity less than 800 tons but more than 400 tons, a minimum of one acceptance test shall be performed. In all cases, a minimum of 3 samples will be obtained at the point of acceptance, a minimum of one of the three samples will be tested for conformance to the JMF:

- If the test results are found to be within specification requirements, additional testing will be at the Engineer's discretion.

- If test results are found not to be within specification requirements, additional testing of the remaining samples to determine a CPF shall be performed.

5-04.3(9)C3 Mixture Nonstatistical Evaluation – Acceptance Testing

Testing of HMA for compliance of V_a will at the option of the Contracting Agency. If tested, compliance of V_a will use WSDOT SOP 731.

Testing for compliance of asphalt binder content will be by WSDOT FOP for AASHTO T 308.

Testing for compliance of gradation will be by FOP for WAQTC T 27/T 11.

5-04.3(9)C4 Mixture Nonstatistical Evaluation – Pay Factors

For each lot of material falling outside the tolerance limits in 5-04.3(9), the Contracting Agency will determine a CPF using the following price adjustment factors:

Table of Price Adjustment Factors	
Constituent	**Factor "f"**
All aggregate passing: 1½", 1", ¾", ½", ⅜" and No.4 sieves	2
All aggregate passing No. 8 sieve	15

Provided to Builders Exchange of WA, Inc. For usage Conditions Agreement see www.bxwa.com - Always Verify Scal

All aggregate passing No. 200 sieve	20
Asphalt binder	40
Air Voids (Va) (where applicable)	20

Each lot of HMA produced under Nonstatistical Evaluation and having all constituents falling within the tolerance limits of the job mix formula shall be accepted at the unit Contract price with no further evaluation. When one or more constituents fall outside the nonstatistical tolerance limits in the Job Mix Formula shown in Table of Price Adjustment Factors, the lot shall be evaluated in accordance with Section 1-06.2 to determine the appropriate CPF. The nonstatistical tolerance limits will be used in the calculation of the CPF and the maximum CPF shall be 1.00. When less than three sublots exist, backup samples of the existing sublots or samples from the Roadway shall be tested to provide a minimum of three sets of results for evaluation.

5-04.3(9)C5 Vacant

5-04.3(9)C6 Mixture Nonstatistical Evaluation – Price Adjustments

For each lot of HMA mix produced under Nonstatistical Evaluation when the calculated CPF is less than 1.00, a Nonconforming Mix Factor (NCMF) will be determined. The NCMF equals the algebraic difference of CPF minus 1.00 multiplied by 60 percent. The total job mix compliance price adjustment will be calculated as the product of the NCMF, the quantity of HMA in the lot in tons, and the unit Contract price per ton of mix.

If a constituent is not measured in accordance with these Specifications, its individual pay factor will be considered 1.00 in calculating the CPF.

5-04.3(9)C7 Mixture Nonstatistical Evaluation - Retests

The Contractor may request a sublot be retested. To request a retest, the Contractor shall submit a written request within 7 calendar days after the specific test results have been received. A split of the original acceptance sample will be retested. The split of the sample will not be tested with the same tester that ran the original acceptance test. The sample will be tested for a complete gradation analysis, asphalt binder content, and, at the option of the agency, V_a. The results of the retest will be used for the acceptance of the HMA in place of the original sublot sample test results. The cost of testing will be deducted from any monies due or that may come due the Contractor under the Contract at the rate of $500 per sample.

5-04.3 (9)D Mixture Acceptance – Commercial Evaluation

If sampled and tested, HMA produced under Commercial Evaluation and having all constituents falling within the tolerance limits of the job mix formula shall be accepted at the unit Contract price with no further evaluation. When one or more constituents fall outside the commercial tolerance limits in the Job Mix Formula shown in 5-04.3(9), the lot shall be evaluated in accordance with Section 1-06.2 to determine the appropriate CPF. The commercial tolerance limits will be used in the calculation of the CPF and the maximum CPF shall be 1.00. When less than three sublots exist, backup samples of the existing sublots or samples from the street shall be tested to provide a minimum of three sets of results for evaluation.

Provided to Builders Exchange of WA, Inc. For usage Conditions Agreement see www.bxwa.com - Always Verify Scal

For each lot of HMA mix produced and tested under Commercial Evaluation when the calculated CPF is less than 1.00, a Nonconforming Mix Factor (NCMF) will be determined. The NCMF equals the algebraic difference of CPF minus 1.00 multiplied by 60 percent. The Job Mix Compliance Price Adjustment will be calculated as the product of the NCMF, the quantity of HMA in the lot in tons, and the unit Contract price per ton of mix.

If a constituent is not measured in accordance with these Specifications, its individual pay factor will be considered 1.00 in calculating the CPF.

5-04.3(10) HMA Compaction Acceptance

HMA mixture accepted by nonstatistical evaluation that is used in traffic lanes, including lanes for intersections, ramps, truck climbing, weaving, and speed change, and having a specified compacted course thickness greater than 0.10-foot, shall be compacted to a specified level of relative density. The specified level of relative density shall be a CPF of not less than 0.75 when evaluated in accordance with Section 1-06.2, using a LSL of 92.0 (minimum of 92 percent of the maximum density). The maximum density shall be determined by WSDOT FOP for AASHTO T 729. The specified level of density attained will be determined by the evaluation of the density of the pavement. The density of the pavement shall be determined in accordance with WSDOT FOP for WAQTC TM 8, except that gauge correlation will be at the discretion of the Engineer, when using the nuclear density gauge and WSDOT SOP 736 when using cores to determine density.

Tests for the determination of the pavement density will be taken in accordance with the required procedures for measurement by a nuclear density gauge or Roadway cores after completion of the finish rolling.

If the Contracting Agency uses a nuclear density gauge to determine density the test procedures FOP for WAQTC TM 8 and WSDOT SOP T 729 will be used on the day the mix is placed and prior to opening to traffic.

Roadway cores for density may be obtained by either the Contracting Agency or the Contractor in accordance with WSDOT SOP 734. The core diameter shall be 4-inches minimum, unless otherwise approved by the Engineer. Roadway cores will be tested by the Contracting Agency in accordance with WSDOT FOP for AASHTO T 166.

If the Contract includes the Bid item “Roadway Core”, the cores shall be obtained by the Contractor in the presence of the Engineer on the same day the mix is placed and at locations designated by the Engineer. If the Contract does not include the Bid item “Roadway Core”, the Contracting Agency will obtain the cores.

For a lot in progress with a CPF less than 0.75, a new lot will begin at the Contractor’s request after the Engineer is satisfied that material conforming to the Specifications can be produced.

Provided to Builders Exchange of WA, Inc. For usage Conditions Agreement see www.bxwa.com - Always Verify Scal

HMA mixture accepted by commercial evaluation and HMA constructed under conditions other than those listed above shall be compacted on the basis of a test point evaluation of the compaction train. The test point evaluation shall be performed in accordance with instructions from the Engineer. The number of passes with an approved compaction train, required to attain the maximum test point density, shall be used on all subsequent paving.

HMA for preleveling shall be thoroughly compacted. HMA that is used for preleveling wheel rutting shall be compacted with a pneumatic tire roller unless otherwise approved by the Engineer.

Test Results

For a sublot that has been tested with a nuclear density gauge that did not meet the minimum of 92 percent of the reference maximum density in a compaction lot with a CPF below 1.00 and thus subject to a price reduction or rejection, the Contractor may request that a core be used for determination of the relative density of the sublot. The relative density of the core will replace the relative density determined by the nuclear density gauge for the sublot and will be used for calculation of the CPF and acceptance of HMA compaction lot.

When cores are taken by the Contracting Agency at the request of the Contractor, they shall be requested by noon of the next workday after the test results for the sublot have been provided or made available to the Contractor. Core locations shall be outside of wheel paths and as determined by the Engineer. Traffic control shall be provided by the Contractor as requested by the Engineer. Failure by the Contractor to provide the requested traffic control will result in forfeiture of the request for cores. When the CPF for the lot based on the results of the HMA cores is less than 1.00, the cost for the coring will be deducted from any monies due or that may become due the Contractor under the Contract at the rate of $200 per core and the Contractor shall pay for the cost of the traffic control.

5-04.3(10)A HMA Compaction – General Compaction Requirements

Compaction shall take place when the mixture is in the proper condition so that no undue displacement, cracking, or shoving occurs. Areas inaccessible to large compaction equipment shall be compacted by other mechanical means. Any HMA that becomes loose, broken, contaminated, shows an excess or deficiency of asphalt, or is in any way defective, shall be removed and replaced with new hot mix that shall be immediately compacted to conform to the surrounding area.

The type of rollers to be used and their relative position in the compaction sequence shall generally be the Contractor's option, provided the specified densities are attained. Unless the Engineer has approved otherwise, rollers shall only be operated in the static mode when the internal temperature of the mix is less than 175°F. Regardless of mix temperature, a roller shall not be operated in a mode that results in checking or cracking of the mat. Rollers shall only be operated in static mode on bridge decks.

5-04.3(10)B HMA Compaction - Cyclic Density

Low cyclic density areas are defined as spots or streaks in the pavement that are less than 90 percent of the theoretical maximum density. At the Engineer's discretion, the Engineer

Provided to Builders Exchange of WA, Inc. For usage Conditions Agreement see www.bxwa.com - Always Verify Scal

may evaluate the HMA pavement for low cyclic density, and when doing so will follow WSDOT SOP 733. A $500 Cyclic Density Price Adjustment will be assessed for any 500-foot section with two or more density readings below 90 percent of the theoretical maximum density.

5-04.3(10)C Vacant

5-04.3(10)D HMA Nonstatistical Compaction

5-04.3(10)D1 HMA Nonstatistical Compaction - Lots and Sublots

HMA compaction which is accepted by nonstatistical evaluation will be based on acceptance testing performed by the Contracting Agency dividing the project into compaction lots.

A lot is represented by randomly selected samples of the same mix design that will be tested for acceptance. A lot is defined as the total quantity of material or work produced for each Job Mix Formula placed. Only one lot per JMF is expected. A sublot shall be equal to one day's production or 400 tons, whichever is less except that the final sublot will be a minimum of 200 tons and may be increased to 800 tons. Testing for compaction will be at the rate of 5 tests per sublot per WSDOT T 738.

The sublot locations within each density lot will be determined by the Engineer. For a lot in progress with a CPF less than 0.75, a new lot will begin at the Contractor's request after the Engineer is satisfied that material conforming to the Specifications can be produced.

HMA mixture accepted by commercial evaluation and HMA constructed under conditions other than those listed above shall be compacted on the basis of a test point evaluation of the compaction train. The test point evaluation shall be performed in accordance with instructions from the Engineer. The number of passes with an approved compaction train, required to attain the maximum test point density, shall be used on all subsequent paving.

HMA for preleveling shall be thoroughly compacted. HMA that is used to prelevel wheel ruts shall be compacted with a pneumatic tire roller unless otherwise approved by the Engineer.

5-04.3(10)D2 HMA Compaction Nonstatistical Evaluation – Acceptance Testing

The location of the HMA compaction acceptance tests will be randomly selected by the Engineer from within each sublot, with one test per sublot.

5-04.3(10)D3 HMA Nonstatistical Compaction – Price Adjustments

For each compaction lot with one or two sublots, having all sublots attain a relative density that is 92 percent of the reference maximum density the HMA shall be accepted at the unit Contract price with no further evaluation. When a sublot does not attain a relative density that is 92 percent of the reference maximum density, the lot shall be evaluated in accordance with Section 1-06.2 to determine the appropriate CPF. The maximum CPF shall be 1.00, however, lots with a calculated CPF in excess of 1.00 will be used to offset lots with CPF values below 1.00 but greater than 0.90. Lots with CPF lower than 0.90 will be evaluated for compliance per 5-04.3(11). Additional testing by either a nuclear moisture-

Provided to Builders Exchange of WA, Inc. For usage Conditions Agreement see www.bxwa.com - Always Verify Scal

density gauge or cores will be completed as required to provide a minimum of three tests for evaluation.

For compaction below the required 92%, a Non-Conforming Compaction Factor (NCCF) will be determined. The NCCF equals the algebraic difference of CPF minus 1.00 multiplied by 40 percent. The Compaction Price Adjustment will be calculated as the product of CPF, the quantity of HMA in the compaction control lot in tons, and the unit Contract price per ton of mix.

5-04.3(11) Reject Work

5-04.3(11)A Reject Work General

Work that is defective or does not conform to Contract requirements shall be rejected. The Contractor may propose, in writing, alternatives to removal and replacement of rejected material. Acceptability of such alternative proposals will be determined at the sole discretion of the Engineer. HMA that has been rejected is subject to the requirements in Section 1-06.2(2) and this specification, and the Contractor shall submit a corrective action proposal to the Engineer for approval.

5-04.3(11)B Rejection by Contractor

The Contractor may, prior to sampling, elect to remove any defective material and replace it with new material. Any such new material will be sampled, tested, and evaluated for acceptance.

5-04.3(11)C Rejection Without Testing (Mixture or Compaction)

The Engineer may, without sampling, reject any batch, load, or section of Roadway that appears defective. Material rejected before placement shall not be incorporated into the pavement. Any rejected section of Roadway shall be removed.

No payment will be made for the rejected materials or the removal of the materials unless the Contractor requests that the rejected material be tested. If the Contractor elects to have the rejected material tested, a minimum of three representative samples will be obtained and tested. Acceptance of rejected material will be based on conformance with the nonstatistical acceptance Specification. If the CPF for the rejected material is less than 0.75, no payment will be made for the rejected material; in addition, the cost of sampling and testing shall be borne by the Contractor. If the CPF is greater than or equal to 0.75, the cost of sampling and testing will be borne by the Contracting Agency. If the material is rejected before placement and the CPF is greater than or equal to 0.75, compensation for the rejected material will be at a CPF of 0.75. If rejection occurs after placement and the CPF is greater than or equal to 0.75, compensation for the rejected material will be at the calculated CPF with an addition of 25 percent of the unit Contract price added for the cost of removal and disposal.

5-04.3(11)D Rejection - A Partial Sublot

In addition to the random acceptance sampling and testing, the Engineer may also isolate from a normal sublot any material that is suspected of being defective in relative density,

Provided to Builders Exchange of WA, Inc. For usage Conditions Agreement see www.bxwa.com - Always Verify Scal

gradation or asphalt binder content. Such isolated material will not include an original sample location. A minimum of three random samples of the suspect material will be obtained and tested. The material will then be statistically evaluated as an independent lot in accordance with Section 1-06.2(2).

5-04.3(11)E Rejection - An Entire Sublot

An entire sublot that is suspected of being defective may be rejected. When a sublot is rejected a minimum of two additional random samples from this sublot will be obtained. These additional samples and the original sublot will be evaluated as an independent lot in accordance with Section 1-06.2(2).

5-04.3(11)F Rejection - A Lot in Progress

The Contractor shall shut down operations and shall not resume HMA placement until such time as the Engineer is satisfied that material conforming to the Specifications can be produced:

1. When the CPF of a lot in progress drops below 1.00 and the Contractor is taking no corrective action, or
2. When the Pay Factor (PF) for any constituent of a lot in progress drops below 0.95 and the Contractor is taking no corrective action, or
3. When either the PF for any constituent or the CPF of a lot in progress is less than 0.75.

5-04.3(11)G Rejection - An Entire Lot (Mixture or Compaction)

An entire lot with a CPF of less than 0.75 will be rejected.

5-04.3(12) Joints

5-04.3(12)A HMA Joints

5-04.3(12)A1 Transverse Joints

The Contractor shall conduct operations such that the placing of the top or wearing course is a continuous operation or as close to continuous as possible. Unscheduled transverse joints will be allowed, and the roller may pass over the unprotected end of the freshly laid mixture only when the placement of the course must be discontinued for such a length of time that the mixture will cool below compaction temperature. When the Work is resumed, the previously compacted mixture shall be cut back to produce a slightly beveled edge for the full thickness of the course.

A temporary wedge of HMA constructed on a 20H:1V shall be constructed where a transverse joint as a result of paving or planing is open to traffic. The HMA in the temporary wedge shall be separated from the permanent HMA by strips of heavy wrapping paper or other methods approved by the Engineer. The wrapping paper shall be removed and the joint trimmed to a slightly beveled edge for the full thickness of the course prior to resumption of paving.

Provided to Builders Exchange of WA, Inc. For usage Conditions Agreement see www.bxwa.com - Always Verify Scal

The material that is cut away shall be wasted and new mix shall be laid against the cut. Rollers or tamping irons shall be used to seal the joint.

5-04.3(12)A2 Longitudinal Joints

The longitudinal joint in any one course shall be offset from the course immediately below by not more than 6 inches nor less than 2 inches. All longitudinal joints constructed in the wearing course shall be located at a lane line or an edge line of the Traveled Way. A notched wedge joint shall be constructed along all longitudinal joints in the wearing surface of new HMA unless otherwise approved by the Engineer. The notched wedge joint shall have a vertical edge of not less than the maximum aggregate size or more than ½ of the compacted lift thickness and then taper down on a slope not steeper than 4H:1V. The sloped portion of the HMA notched wedge joint shall be uniformly compacted.

5-04.3(12)B Bridge Paving Joint Seals

Bridge Paving Joint Seals shall be in accordance with Section 5-03.

5-04.3(13) Surface Smoothness

The completed surface of all courses shall be of uniform texture, smooth, uniform as to crown and grade, and free from defects of all kinds. The completed surface of the wearing course shall not vary more than ⅛ inch from the lower edge of a 10-foot straightedge placed on the surface parallel to the centerline. The transverse slope of the completed surface of the wearing course shall vary not more than ¼ inch in 10 feet from the rate of transverse slope shown in the Plans.

When deviations in excess of the above tolerances are found that result from a high place in the HMA, the pavement surface shall be corrected by one of the following methods:

1. Removal of material from high places by grinding with an approved grinding machine, or

2. Removal and replacement of the wearing course of HMA, or

3. By other method approved by the Engineer.

Correction of defects shall be carried out until there are no deviations anywhere greater than the allowable tolerances.

Deviations in excess of the above tolerances that result from a low place in the HMA and deviations resulting from a high place where corrective action, in the opinion of the Engineer, will not produce satisfactory results will be accepted with a price adjustment. The Engineer shall deduct from monies due or that may become due to the Contractor the sum of $500.00 for each and every section of single traffic lane 100 feet in length in which any excessive deviations described above are found.

Provided to Builders Exchange of WA, Inc. For usage Conditions Agreement see www.bxwa.com - Always Verify Scal

When utility appurtenances such as manhole covers and valve boxes are located in the traveled way, the utility appurtenances shall be adjusted to the finished grade prior to paving. This requirement may be waived when requested by the Contractor, at the discretion of the Engineer or when the adjustment details provided in the project plan or specifications call for utility appurtenance adjustments after the completion of paving.

Utility appurtenance adjustment discussions will be included in the Pre-Paving and Pre-Planing Briefing (5-04.3(14)B3). Submit a written request to waive this requirement to the Engineer prior to the start of paving.

5-04.3(14) Planing Bituminous Pavement

The planing plan must be approved by the Engineer and a pre-planing meeting must be held prior to the start of any planing. See Section 5-04.3(14)B2 for information on planing submittals.

Where planing an existing pavement is specified in the Contract, the Contractor must remove existing surfacing material and to reshape the surface to remove irregularities. The finished product must be a prepared surface acceptable for receiving an HMA overlay.

Use the cold milling method for planing unless otherwise specified in the Contract. Do not use the planer on the final wearing course of new HMA.

Conduct planing operations in a manner that does not tear, break, burn, or otherwise damage the surface which is to remain. The finished planed surface must be slightly grooved or roughened and must be free from gouges, deep grooves, ridges, or other imperfections. The Contractor must repair any damage to the surface by the Contractor's planing equipment, using an Engineer approved method.

Repair or replace any metal castings and other surface improvements damaged by planing, as determined by the Engineer.

A tapered wedge cut must be planed longitudinally along curb lines sufficient to provide a minimum of 4 inches of curb reveal after placement and compaction of the final wearing course. The dimensions of the wedge must be as shown on the Drawings or as specified by the Engineer.

A tapered wedge cut must also be made at transitions to adjoining pavement surfaces (meet lines) where butt joints are shown on the Drawings. Cut butt joints in a straight line with vertical faces 2 inches or more in height, producing a smooth transition to the existing adjoining pavement.

After planing is complete, planed surfaces must be swept, cleaned, and if required by the Contract, patched and preleveled.

Provided to Builders Exchange of WA, Inc. For usage Conditions Agreement see www.bxwa.com - Always Verify Scal

The Engineer may direct additional depth planing. Before performing this additional depth planing, the Contractor must conduct a hidden metal in pavement detection survey as specified in Section 5-04.3(14)A.

5-04.3(14)A Pre-Planing Metal Detection Check

Before starting planing of pavements, and before any additional depth planing required by the Engineer, the Contractor must conduct a physical survey of existing pavement to be planed with equipment that can identify hidden metal objects.

Should such metal be identified, promptly notify the Engineer.

See Section 1-07.16(1) regarding the protection of survey monumentation that may be hidden in pavement.

The Contractor is solely responsible for any damage to equipment resulting from the Contractor's failure to conduct a pre-planing metal detection survey, or from the Contractor's failure to notify the Engineer of any hidden metal that is detected.

5-04.3(14)B Paving and Planing Under Traffic

5-04.3(14)B1 General

In addition, the requirements of Section 1-07.23 and the traffic controls required in Section 1-10, and unless the Contract specifies otherwise or the Engineer approves, the Contractor must comply with the following:

1. Intersections:

    a. Keep intersections open to traffic at all times, except when paving or planing operations through an intersection requires closure. Such closure must be kept to the minimum time required to place and compact the HMA mixture, or plane as appropriate. For paving, schedule such closure to individual lanes or portions thereof that allows the traffic volumes and schedule of traffic volumes required in the approved traffic control plan. Schedule work so that adjacent intersections are not impacted at the same time and comply with the traffic control restrictions required by the Traffic Engineer. Each individual intersection closure or partial closure must be addressed in the traffic control plan, which must be submitted to and accepted by the Engineer, see Section 1-10.2(2).

    b. When planing or paving and related construction must occur in an intersection, consider scheduling and sequencing such work into quarters of the intersection, or half or more of an intersection with side street detours. Be prepared to sequence the work to individual lanes or portions thereof.

    c. Should closure of the intersection in its entirety be necessary, and no trolley service is impacted, keep such closure to the minimum time required to place and compact the HMA mixture, plane, remove asphalt, tack coat, and as needed.

Provided to Builders Exchange of WA, Inc. For usage Conditions Agreement see www.bxwa.com - Always Verify Scal

d. Any work in an intersection requires advance warning in both signage and a number of Working Days advance notice as determined by the Engineer, to alert traffic and emergency services of the intersection closure or partial closure.

e. Allow new compacted HMA asphalt to cool to ambient temperature before any traffic is allowed on it. Traffic is not allowed on newly placed asphalt until approval has been obtained from the Engineer.

2. Temporary centerline marking, post-paving temporary marking, temporary stop bars, and maintaining temporary pavement marking must comply with Section 8-23.

3. Permanent pavement marking must comply with Section 8-22.

5-04.3(14)B2 Submittals - Planing Plan and HMA Paving Plan

The Contractor must submit a separate planing plan and a separate paving plan to the Engineer at least 5 Working Days in advance of each operation's activity start date. These plans must show how the moving operation and traffic control are coordinated, as they will be discussed at the pre-planing briefing and pre-paving briefing. When requested by the Engineer, the Contractor must provide each operation's traffic control plan on 24 x 36 inch or larger size Shop Drawings with a scale showing both the area of operation and sufficient detail of traffic beyond the area of operation where detour traffic may be required. The scale on the Shop Drawings is 1 inch = 20 feet, which may be changed if the Engineer agrees sufficient detail is shown.

The planing operation and the paving operation include, but are not limited to, metal detection, removal of asphalt and temporary asphalt of any kind, tack coat and drying, staging of supply trucks, paving trains, rolling, scheduling, and as may be discussed at the briefing.

When intersections will be partially or totally blocked, provide adequately sized and noticeable signage alerting traffic of closures to come, a minimum 2 Working Days in advance. The traffic control plan must show where police officers will be stationed when signalization is or may be, countermanded, and show areas where flaggers are proposed.

At a minimum, the planing and the paving plan must include:

1. A copy of the accepted traffic control plan, see Section 1-10.2(2), detailing each day's traffic control as it relates to the specific requirements of that day's planing and paving. Briefly describe the sequencing of traffic control consistent with the proposed planing and paving sequence, and scheduling of placement of temporary pavement markings and channelizing devices after each day's planing, and paving.

2. A copy of each intersection's traffic control plan.

Provided to Builders Exchange of WA, Inc. For usage Conditions Agreement see www.bxwa.com - Always Verify Scal

3. Haul routes from supplier facilities, and locations of temporary parking and staging areas, including return routes. Describe the complete round trip as it relates to the sequencing of paving operations.

4. Names and locations of HMA supplier facilities to be used.

5. List of all equipment to be used for paving.

6. List of personnel and associated job classification assigned to each piece of paving equipment.

7. Description (geometric or narrative) of the scheduled sequence of planing and of paving and intended area of planing and of paving for each day's work, must include the directions of proposed planing and of proposed paving, sequence of adjacent lane paving, sequence of skipped lane paving, intersection planing and paving scheduling and sequencing, and proposed notifications and coordinations to be timely made. The plan must show HMA joints relative to the final pavement marking lane lines.

8. Names, job titles, and contact information for field, office, and plant supervisory personnel.

9. A copy of the approved Mix Designs.

10. Tonnage of HMA to be placed each day.

11. Approximate times and days for starting and ending daily operations.

5-04.3(14)B3 Pre-Paving and Pre-Planing Briefing

At least 2 Working Days before the first paving operation and the first planing operation, or as scheduled by the Engineer for future paving and planing operations to ensure the Contractor has adequately prepared for notifying and coordinating as required in the Contract, the Contractor must be prepared to discuss that day's operations as they relate to other entities and to public safety and convenience, including driveway and business access, garbage truck operations, transit operations and working around energized overhead wires, school and nursing home and hospital and other accesses, other Contractors who may be operating in the area, pedestrian and bicycle traffic, and emergency services. The Contractor, and Subcontractors that may be part of that day's operations, must meet with the Engineer and discuss the proposed operation as it relates to the submitted planing plan and paving plan, approved traffic control plan, and public convenience and safety. Such discussion includes, but is not limited to:

1. General for both the Paving and Planing:

   a. The actual times of starting and ending daily operations.

Provided to Builders Exchange of WA, Inc. For usage Conditions Agreement see www.bxwa.com - Always Verify Scal

b. In intersections, how to break up the intersection, and address traffic control and signalization for that operation, including use of peace officers.

c. The sequencing and scheduling of paving operations and of planing operations, as applicable, as it relates to traffic control, public convenience and safety, and other Contractors who may operate in the Project limits.

d. Notifications required of Contractor activities and coordinating with other entities and the public as necessary.

e. Description of the sequencing of installation and types of temporary pavement markings as it relates to planning and paving.

f. Description of the sequencing of installation of, and the removal of, temporary pavement patch material around exposed castings and as may be needed.

g. Description of procedures and equipment to identify hidden metal in the pavement, such as survey monumentation, monitoring wells, streetcar rail, and castings, before planing as per Section 5-04.3(14)B2.

h. Description of how flaggers will be coordinated with the planing, paving, and related operations.

i. Description of sequencing of traffic controls for the process of rigid pavement base repairs.

j. Other items the Engineer deems necessary to address.

2. Paving – additional topics:

a. When to start applying tack and coordinating with paving.

b. Types of equipment and numbers of each type of equipment to be used. If more pieces of equipment than personnel are proposed, describe the sequencing of the personnel operating the types of equipment. Discuss the continuance of operator personnel for each type of equipment as it relates to meeting Specification requirements.

c. Number of JMFs to be placed, and if more than one JMF is used, how the Contractor will ensure different JMFs are distinguished, how pavers and how MTVs are distinguished, and how pavers and MTVs are cleaned so that one JMF does not adversely influence the other JMF.

Provided to Builders Exchange of WA, Inc. For usage Conditions Agreement see www.bxwa.com - Always Verify Scal

d. Description of contingency plans for that day's operations such as equipment breakdown, rain out, and supplier shutdown of operations.

e. Number of sublots to be placed, sequencing of density testing, and other sampling and testing.

5-04.3(15) Sealing Pavement Surfaces

Apply a fog seal where shown in the plans. Construct the fog seal in accordance with Section 5-02.3. Unless otherwise approved by the Engineer, apply the fog seal prior to opening to traffic.

5-04.3(16) HMA Road Approaches

Construct HMA approaches at the locations shown in the Plans or where staked by the Engineer, in accordance with Section 5-04.

5-04.4 Measurement

HMA Cl. ___ PG ___, HMA for ___ Cl. ___ PG ___, and Commercial HMA will be measured by the ton in accordance with Section 1-09.2, with no deduction being made for the weight of asphalt binder, mineral filler, or any other component of the mixture. If the Contractor elects to remove and replace mix as allowed by Section 5-04.3(11), the material removed will not be measured.

Roadway cores will be measured per each for the number of cores taken.

Pavement repair excavation will be measured by the square yard of surface marked prior to excavation.

Planing bituminous pavement will be measured by the square yard.

5-04.5 Payment

Payment will be made for each of the following Bid items that are included in the Proposal:

"HMA Cl. ___ PG ___", per ton.

"HMA for Approach Cl. ___ PG ___", per ton.

"HMA for Preleveling Cl. ___ PG ___", per ton.

"HMA for Pavement Repair Cl. ___ PG ___", per ton.

"Commercial HMA", per ton.

Provided to Builders Exchange of WA, Inc. For usage Conditions Agreement see www.bxwa.com - Always Verify Scal

The unit Contract price per ton for "HMA Cl. ___ PG ___", "HMA for Approach Cl. ___ PG ___", "HMA for Preleveling Cl. ___ PG ___", "HMA for Pavement Repair Cl. ___ PG ___", and "Commercial HMA" shall be full compensation for all costs, including anti-stripping additive, incurred to carry out the requirements of Section 5-04 except for those costs included in other items which are included in this Subsection and which are included in the Proposal.

"Pavement Repair Excavation Incl. Haul", per square yard.

The unit Contract price per square yard for "Pavement Repair Excavation Incl. Haul" shall be full payment for all costs incurred to perform the Work described in Section 5-04.3(4) with the exception, however, that all costs involved in the placement of HMA shall be included in the unit Contract price per ton for "HMA for Pavement Repair Cl. ___ PG ___", per ton.

"Asphalt for Prime Coat", per ton.

The unit Contract price per ton for "Asphalt for Prime Coat" shall be full payment for all costs incurred to obtain, provide and install the material in accordance with Section 5-04.3(4).

"Prime Coat Agg.", per cubic yard, or per ton.

The unit Contract price per cubic yard or per ton for "Prime Coat Agg." shall be full pay for furnishing, loading, and hauling aggregate to the place of deposit and spreading the aggregate in the quantities required by the Engineer.

"Planing Bituminous Pavement", per square yard.

The unit Contract price per square yard for "Planing Bituminous Pavement" shall be full payment for all costs incurred to perform the Work described in Section 5-04.3(14).

"Job Mix Compliance Price Adjustment", by calculation.

"Job Mix Compliance Price Adjustment" will be calculated and paid for as described in Section 5-04.3(9)C6.

"Compaction Price Adjustment", by calculation.

"Compaction Price Adjustment" will be calculated and paid for as described in Section 5-04.3(10)D3.

"Roadway Core", per each.

Provided to Builders Exchange of WA, Inc. For usage Conditions Agreement see www.bxwa.com - Always Verify Scal

The Contractor's costs for all Work associated with the coring (e.g., traffic control) shall be incidental and included in the unit Bid price per each.

"Cyclic Density Price Adjustment", by calculation.

"Cyclic Density Price Adjustment" will be calculated and paid for as described in Section 5-04.3(10)B.

END OF DIVISION 5

Provided to Builders Exchange of WA, Inc. For usage Conditions Agreement see www.bxwa.com - Always Verify Scal

Division 7
Drainage Structures, Storm Sewers, Sanitary Sewers, Water Mains, and Conduits

7-04 Storm Sewers

7-04.5 Payment

Section 7-04.5 is supplemented with the following:

(******)

The unit Contract price per linear foot for storm sewer pipe of any kind and size specified shall be include furnishing and installing tracer/locator tape.

7-05 Manholes, Inlets, Catch Basins, and Drywells

7-05.3 Construction Requirements

7-05.3(1) Adjusting Catch Basins and Manholes to Grade

Section 7-05.3(1) is supplemented with the following:

All manholes and catch basins shall be adjusted to finished grade after paving operations are complete. The Contractor shall adjust the drainage structure using concrete risers or adjustment rings, or by other necessary means approved by the Engineer, in accordance with Contracting Agency standards, to the satisfaction of the Engineer. If brick risers are present, they shall be replaced with concrete.

All catch basins and manholes for storm sewers shall be grouted water tight, including under frames, rims, manhole barrel, riser sections, and pipe collars.

Replace Existing Rectangular Frame and Grate with New Rectangular Frame and Solid Metal Cover

Where shown in the Plans or as directed by the Engineer, the Contractor shall remove and dispose of existing frames and grates, and replace them with new 20" x 24" frames and covers in accordance with WSDOT Standard Plan B-30.20.

7-05.4 Measurement

The third paragraph of Section 7-05.4 is revised to read as follows:

Adjustment of manholes, catch basins, and inlets will be made separately per each structure after raising to finished grade.

Replacement of existing rectangular frame and grate with new 20" x 24" frame and solid metal cover will be measured per each replacement.

7-05.5 Payment

Section 7-05.5 is supplemented with the following:

"Replace Existing Rectangular Frame and Grate with New Rectangular Frame and Solid Metal Cover", per each.

Provided to Builders Exchange of WA, Inc. For usage Conditions Agreement see www.bxwa.com - Always Verify Scal

The unit Contract price per each for "Replace Existing Rectangular Frame and Grate with New Rectangular Frame and Solid Metal Cover" shall be full pay for all costs necessary to remove existing frames and grates and replace them with new 20" x 24" frames and solid covers, including disposal of removed materials.

7-12 Valves for Water Mains

7-12.1 Description

Section 7-12.1 is supplemented with the following:

This Work consists of adjusting existing water valve boxes, water meter boxes, and covers at locations shown in the Plans, or as directed by the Engineer.

7-12.3 Construction Requirements

Section 7-12.3 is supplemented with the following:

Existing water valve boxes shall be adjusted to the grade as staked or otherwise designated by the Engineer. The adjustment of the water valve box to grade by the use of riser rings is not allowed.

Removal operations shall be conducted to prevent damage to the existing water valve box. Any damage due to the Contractor's operations shall be repaired or replaced at the Contractor's expense and to the Engineer's satisfaction.

The Contractor shall conduct water valve box adjustments so that the fully-adjusted box allows the respective valve to be fully operational. The Contractor shall make the adjustment and remove all debris from the adjusted water valve box to ensure such operational condition.

7-12.4 Measurement

Section 7-12.4 is supplemented with the following:

Adjusting water valve boxes and water meter boxes will be measured per each for each water valve box or water meter box adjusted.

7-12.5 Payment

Section 7-12.5 is supplemented with the following:

"Adjust Water Valve Box to Grade", per each.
The unit Contract price per each for "Adjust Water Valve Box to Grade" shall be full compensation to perform the Work as specified, including restoration of adjacent area directly surrounding the water valve box.

"Adjust Water Meter Box to Grade", per each.
The unit Contract price per each for "Adjust Water Meter Box to Grade" shall be full compensation to perform the Work as specified, including restoration of adjacent area directly surrounding the water meter box.

Provided to Builders Exchange of WA, Inc. For usage Conditions Agreement see www.bxwa.com - Always Verify Scal

7-14 Hydrants

7-14.5 Payment

Section 7-14.5 is supplemented with the following:

"Resetting Existing Hydrant", per each.

The unit Contract price per each for "Resetting Existing Hydrant" shall be full compensation to perform the Work as specified, including all pipe needed to set hydrant in specified location as shown in the Plans.

END OF DIVISION 7

Provided to Builders Exchange of WA, Inc. For usage Conditions Agreement see www.bxwa.com - Always Verify Scal

Division 8
Miscellaneous Construction

8-01 Erosion Control and Water Pollution Control

8-01.1 Description

Section 8-01.1 is supplemented with the following:

This Work shall consist of preparing and implementing a Stormwater Pollution Prevention Plan (SWPPP).

8-01.3 Construction Requirements

8-01.3(1) General

8-01.3(1)A Submittals

Section 8-01.3(1)A is supplemented with the following:

Prior to beginning Work, the Contractor shall prepare a Stormwater Pollution Prevention Plan (SWPPP) as part of the TESC Plan, meeting the requirements of the 2005 Washington State Department of Ecology's *Stormwater Management Manual for Western Washington Volume II – Construction Stormwater Pollution Prevention*, and the Department of Ecology's *Construction Stormwater General Permit*. These documents are available here:

Stormwater Manual:
https://apps.ecology.wa.gov/publications/documents/0510029.pdf

General Permit:
http://www.ecy.wa.gov/programs/wq/Stormwater/construction/resourcesguidance.html

The Contractor shall obtain the Engineer's approval of the SWPPP for implementation before any Work begins. The SWPPP shall cover all areas that the Contractor's Work may affect inside and outside the limits of the project, and shall include all necessary measures to comply with the Construction Stormwater General Permit's conditions.

The Contractor shall include a copy of the SWPPP document and subsequent SWPPP revisions made during the project in inspection documentation recorded by the ESC Lead.

8-01.5 Payment

Section 8-01.5 is supplemented with the following:

"Erosion Control and Water Pollution Prevention", per lump sum, shall also include all Work and materials necessary to develop and implement the SWPPP. All erosion control measures are included in "Erosion Control and Water Pollution Prevention", per lump sum, except as otherwise noted in the Contract Documents.

Provided to Builders Exchange of WA, Inc. For usage Conditions Agreement see www.bxwa.com - Always Verify Scal

8-02 Roadside Restoration

8-02.3 Construction Requirements

8-02.3(17) Property Restoration

Section 8-02.3(17) is added as follows:

The Contractor must blend the new construction into developed private property adjacent to the project using similar materials to those existing, (e.g. seeding must be used to match into lawn areas, bark mulch must be used to match into planting areas, planting soil must be used to match into garden areas, etc.)

If the items used for the restoration have pay items in the Contract, they will be paid under those items.

If restoration of adjacent property requires use of materials that have no pay items, payment will be by force account under the item "Property Restoration."

The Contractor must repair and restore any existing irrigation system damaged by construction, as directed by Engineer.

The Contractor must verify, in the presence of the adjacent property owner and Engineer, operation, location, and existing water pressure capabilities and continuity of the existing private irrigation system prior to excavation and removal.

Property restoration shall consist of restoring existing landscape areas, walkways, retaining and fence support walls of various types, miscellaneous construction associated with adjacent private property restoration, including irrigation systems and roof downspout drains and outfalls, to their original condition, as directed by the Engineer.

8-02.5 Payment

Section 8-02.5 is supplemented with the following:

"Property Restoration", by force account.
Payment for "Property Restoration" shall be by force account as described in Section 1-09.6 of the Standard Specifications and no other compensation will be allowed.

For the purpose of providing a common Bid Proposal for all Bidders and for that purpose only, the estimated cost of this Bid item has been arbitrarily entered in the Proposal to become part of the total Bid by the Contractor.

Provided to Builders Exchange of WA, Inc. For usage Conditions Agreement see www.bxwa.com - Always Verify Scal

8-04 Curbs, Gutters, and Spillways

8-04.3 Construction Requirements

8-04.3(1) Cement Concrete Curbs, Gutters, and Spillways

Section 8-04.3(1) is supplemented with the following:

Cement concrete banding shall be constructed where shown and as detailed in the Plans.

8-04.4 Measurement

Section 8-04.4 is supplemented with the following:

Cement Conc. Banding will be measured by the linear foot along the line of the completed banding.

Cement Conc. Traffic Curb and Gutter – 4 In. Height will be measured by the linear foot along the line of the completed curb and gutter.

Cement Conc. Traffic Curb – 4 In. Height will be measured by the linear foot along the line of the completed curb.

8-04.5 Payment

Section 8-04.5 is supplemented with the following:

"Cement Conc. Banding", per linear foot.
The unit Contract price per linear foot for "Cement Conc. Banding" shall be full compensation for all labor, equipment, materials, forms, and incidentals necessary to perform the Work.

"Cement Conc. Traffic Curb and Gutter – 4 In. Height", per linear foot.
The unit Contract price per linear foot for "Cement Conc. Traffic Curb and Gutter – 4 In. Height" shall be full compensation for all labor, equipment, materials, forms, and incidentals necessary to perform the Work.

"Cement Conc. Traffic Curb – 4 In. Height", per linear foot.
The unit Contract price per linear foot for "Cement Conc. Traffic Curb – 4 In. Height" shall be full compensation for all labor, equipment, materials, forms, and incidentals necessary to perform the Work.

8-14 Cement Concrete Sidewalks

8-14.3 Construction Requirements

Section 8-14.3 is supplemented with the following:

(October 3, 2022 WSDOT GSP)
The Contractor shall request a pre-construction meeting with the Engineer to be held two to five working days before any work can start on cement concrete sidewalks, curb ramps or other pedestrian access routes to discuss construction requirements. Those attending shall include:

Provided to Builders Exchange of WA, Inc. For usage Conditions Agreement see www.bxwa.com - Always Verify Scal

1. The Contractor and subcontractor in charge of constructing forms, and placing, and finishing the cement concrete.

2. Engineer (or representative) and Project Inspectors for the cement concrete sidewalk, curb ramp or pedestrian access route Work.

Items to be discussed in this meeting shall include, at a minimum, the following:

1. Slopes shown on the Plans.

2. Inspection

3. Traffic control

4. Pedestrian control, access routes and delineation

5. Accommodating utilities

6. Form work

7. Installation of detectable warning surfaces

8. Contractor ADA survey and ADA Feature as-built requirements

9. Cold Weather Protection

(January 7, 2019 WSDOT GSP)

Timing Restrictions

Curb ramps shall be constructed on one leg of the intersection at a time. The curb ramps shall be completed and open to traffic within five calendar days before construction can begin on another leg of the intersection unless otherwise allowed by the Engineer.

Unless otherwise allowed by the Engineer, the five calendar day time restriction begins when an existing curb ramp for the quadrant or traffic island/median is closed to pedestrian use and ends when the quadrant or traffic island/median is fully functional and open for pedestrian access.

(January 7, 2019 WSDOT GSP)

Layout and Conformance to Grades

Using the information provided in the Contract documents, the Contractor shall lay out, grade, and form each new curb ramp, sidewalk, and curb and gutter.

8-14.3(3) Placing and Finishing Concrete

Section 8-14.3(3) is supplemented with the following:

Sidewalk and curb and gutter cannot be poured monolithically. An expansion joint will be required when concrete sidewalk is surrounded by other hard surfaces (for example driveways) or as directed by the Engineer.

Provided to Builders Exchange of WA, Inc. For usage Conditions Agreement see www.bxwa.com - Always Verify Scal

8-14.3(6) Documentation

Section 8-14.3(6) is added as follows:

The Contractor shall perform as-constructed ADA compliance field checks for all new sidewalk and curb ramps constructed on the project and provide documentation to the Engineer for approval, certifying that all slopes along sidewalks and ramps meet the slope criteria set forth in the Plans and the PROWAG. The Contractor shall verify the as-constructed slopes of the sidewalks and curb ramps with readings of a 4-foot long "smart level" placed along all fall lines of sidewalks and curb ramps, and include the readings in the provided documentation.

8-14.4 Measurement

Section 8-14.4 is supplemented with the following:

Cement concrete curb ramps will be measured by the square yard of completed curb ramp installed includes the installation of the detectable warning surface.

8-14.5 Payment

Section 8-14.5 is supplemented with the following:

"Cement Conc. Curb Ramp Type _____", per square yard.
The unit Contract price per square yard for "Cement Conc. Curb Ramp Type _____" shall be full pay for installing the curb ramp as specified, including the installation of the detectable warning surface.

Payment for "Cement Conc. Sidewalk", and "Cement Conc. Curb Ramp Type ___" as specified, shall be contingent upon finished concrete meeting the requirements as detailed in the Plans, including, but not limited to all slopes, lines, grades, widths, and lengths in compliance with the Contract documents. All Work not in compliance with the Contract documents shall be considered defective and shall be removed and replaced solely at the Contractor's expense. At the discretion of the Engineer, any damage done to existing sidewalk or curb ramps noted to remain as a result of the Contractor's Work, shall be repaired to the satisfaction of the Engineer, at no additional expense to the Contracting Agency.

Payment for documentation requirements as specified shall be considered as incidental to the "Cement Conc. Sidewalk" and "Cement Conc. Curb Ramp Type ___" Bid items.

8-19 Vacant

Section 8-19, including title, is replaced with the following:

8-19 Concrete Unit Pavers

8-19.1 Description

This Work consists of constructing concrete unit pavers in accordance with details shown in the Plans and these Specifications, and in conformity to the lines and grades shown in the Plans or as established by the Engineer.

8-19.2 Materials

Materials shall meet the requirements of the following Sections:

Provided to Builders Exchange of WA, Inc. For usage Conditions Agreement see www.bxwa.com - Always Verify Scal

Concrete Unit Pavers	9-38.1
Bedding Sand	9-38.2
Joint Sand	9-38.3

8-19.3 Construction Requirements

8-19.3(1) General

Comply with the following Specifications:

American Society for Testing and Materials (ASTM), Latest Edition

Interlocking Concrete Pavement Institute (ICPI), Latest Edition

The Contractor shall comply with environmental agencies, building codes, and other local requirements that are more stringent than above.

Before proceeding with any Work, the Contractor shall inspect the site, carefully check all grades, and verify all dimensions and conditions affecting the Work. The Contractor shall establish all necessary elevations and grade stakes to provide a smooth and even surface. The Contractor shall verify the accuracy of Work layout and grading. The Contractor shall immediately notify the Engineer of any discrepancy on line and level. Extra Work arising from failure to do so shall be completed at the Contractor's expense. The Engineer reserves the right to make minor changes in line or level to suit existing or developed conditions at no additional cost to the Contracting Agency.

The Contractor shall obtain each material from a single source and maintain a high degree of consistency in workmanship throughout the project.

The Contractor shall protect new Work and work-in-progress from vandalism and damage that might be incurred by construction traffic, equipment, property, and persons.

8-19.3(2) Submittals

As part of Contractor approval to perform concrete unit paver Work, the paver Contractor or Subcontractor shall submit a list of minimum five (5) completed projects of similar size and complexity for Local or State agencies including the date of the installation, a contact name and phone number for each project. Agency satisfaction of Work for the submitted projects will be taken into account in the consideration of Subcontractor approval.

Prior to placing pavers, the Contractor shall submit for review and acceptance the following product data and manufacturer's instructions for installation:

- Concrete unit paver with manufacturer Specifications, and operations and maintenance manuals. The Contractor shall provide supplemental operations and maintenance input.
- Sieve analysis for crushed surfacing top course, bedding sand, and joint sand.
- Method of performing the Work and equipment to be used for the paver installation

Provided to Builders Exchange of WA, Inc. For usage Conditions Agreement see www.bxwa.com - Always Verify Scal

The following information shall be provided to the Engineer a minimum of two (2) working days in advance of construction. The Contractor shall submit for review and acceptability full size concrete unit paver sample(s) in the shape and color of each type specified.

The Contractor shall also provide a minimum four (4) foot square concrete unit paver area mock-up for review and acceptance by the Engineer prior to construction, for each type of paver application and transition between paver colors. The paver area mock-up(s) shall be constructed using equipment, tools, and methods proposed for this project. The paver area mock-up(s) shall be maintained on-site in a secure location and shall not be demolished or removed from the site until all concrete paver Work has been completed and accepted. Paver area mock-ups shall be removed and disposed of when no longer needed.

The Contractor shall affix permanent identification to each concrete unit paver area mock-up, including an assigned number, the date of mock-up construction, and name of company and personnel completing the mock-up.

The mock-up area may remain as part of the installed Work at the end of the project provided that it remains in good condition and meets all the conditions of these Specifications.

Concrete unit paver area mock-ups shall be provided for the Engineer's review a minimum of two (2) working days in advance of paver construction.

8-19.3(3) Delivery, Storage and Handling

The pavers shall be delivered and stored in accordance with the manufacturer or supplier's written recommendations.

The Contractor shall also deliver one (1) extra pallet of pavers of each shape, size, and color to the Contracting Agency at a facility location to be determined. Notify Engineer at least two (2) working days prior to delivery.

Joint sand shall be stored as to prevent exposure to rain, snow, and wind. Sand shall also be protected against soilage or contamination from earth and other materials.

8-19.3(4) Subgrade Preparation

The Subgrade preparation shall extend to the rear face of concrete curb or 6" beyond the edge limits of outer paver.

All curbing, and electrical conduits shall be completed prior to Subgrade preparation. Prior to placing concrete unit paver underlying materials, the Subgrade shall be compacted, uniform, and even. Organic materials, roots, debris, rocks, and water-saturated soils in Subgrade shall be removed and disposed of and replace with clean compacted backfill material. The Subgrade shall be compacted to a maximum 95 percent of maximum density as specified in Section 2-03.3(14)D. Construction of paver underlying materials shall not proceed until the Subgrade is inspected by the Engineer to determine acceptability.

8-19.3(5) Base

Provided to Builders Exchange of WA, Inc. For usage Conditions Agreement see www.bxwa.com - Always Verify Scal

CSTC shall be placed over prepared Subgrade, and compacted to the thickness of material indicated in the Plans. Compaction shall be to 95 percent density per Section 2-03.3(14)D. Moisten, spread and screed the Bedding Sand to the thickness of material indicated in the Plans.

Special attention must be given to achieve required compaction standards adjacent to edge restraints, tree grates, sidewalks, and concrete curbs.

8-19.3(6) Paver Installation

The pavers shall be installed in a Herringbone pattern.

The top of edge restraints and other Structures shall be adjusted to grade prior to placing pavers.

The Contractor shall not install underlying paver materials or pavers during heavy rain, freezing temperature, or snowfall. The Contractor shall not install underlying paver materials or pavers on frozen Subgrade or snowfall.

Pavers shall be placed in the pattern as shown in the Plans for Engineer acceptance. Layout pattern and create markings for directional references of joints and string-lines shall be established prior to paver placement. Pavers shall be aligned to maintain correct lines and patterns.

The Contractor shall field verify and coordinate the layout of concrete pavers to minimize cutting of pavers. The Engineer shall be notified of any discrepancies prior to beginning paver installation. The Contractor shall receive Engineer approval prior to the start of concrete paver placement.

The Contractor shall ensure that pavers are free of foreign materials before installation. During placement, pavers shall be mixed from several pallets as they are installed to produce a uniform blend of color.

Gaps at the unit pavement edges shall be filled with standard edge pavers or pavers cut to fit. Cutting shall be performed with a motor-driven masonry saw to provide clean and unchipped edges. Hammer cutting or block splitting is not acceptable. No pieces shall be smaller than one-fourth (1/4) of a full paver unless otherwise accepted by Engineer prior to beginning construction.

After concrete unit paver installation, distribute paver jointing sand evenly across the surface. Sweep the paver jointing sand into joints until full. Compact as necessary to minimize voids in sanded joints. Sweep additional sand into joints as necessary. Sweep away with a broom or use a leaf blower to remove excess sand.

Unit paver paving shall be protected from damage until final acceptance of Work. Vehicular and pedestrian traffic on concrete unit pavers shall not be allowed until the paver installations are accepted by the Engineer and approved for vehicular and pedestrian traffic. Sweep paver pavement and wash free of stains, discoloration, dirt and other foreign material just prior to final acceptance.

Provided to Builders Exchange of WA, Inc. For usage Conditions Agreement see www.bxwa.com - Always Verify Scal

8-19.3(7) Acceptance

The pavement grade and surface elevations in the finished condition shall not deviate more than 3/8-inch from specified elevations. Bond or joint lines shall not vary 1/2-inch over fifty (50) feet from taut string lines. The surface elevation of the pavers shall be 1/8-inch above adjacent curb.

Broken or defective pavers that are loose, chipped, broken, stained, or otherwise damaged as determined by the Engineer shall be removed and replaced. New pavers shall be provided to match adjoining units and install in the same manner as original pavers, with same joint treatment to eliminate evidence of replacement.

8-19.4 Measurement

Concrete unit pavers will be measured by the square foot, finished in place.

Bedding sand and joint sand will not be measured, and will be considered incidental to the concrete unit pavers.

8-19.5 Payment

Payment will be made for each of the following Bid items that are included in the Proposal:

"Concrete Unit Pavers - _____", per square foot.

The unit Contract price for "Concrete Unit Pavers - _____" shall be full pay for all Work to furnish and install concrete unit pavers of the type specified, in the pattern specified, including all required submittals, and all Work to furnish and install bedding sand and joint sand.

8-20 Illumination, Traffic Signal Systems, Intelligent Transportation Systems, and Electrical

8-20.1 Description

Section 8-20.1 is supplemented with the following:

The Work involves the procurement, installation, and removal of the following equipment:

- New Rectangular Rapid Flashing Beacon (RRFB) system at mid-block crossing
- New in-ground crosswalk lighting at mid-block crossing
- New overhead string lights and support poles at mid-block crossing
- Removal and salvage of the existing RRFB system at mid-block crossing
- Relocation of existing pedestrian luminaire at the northeast corner of 271st Street NW and 88th Street NW

8-20.2 Materials

Materials shall meet the requirements of the following Sections:

Light and Signal Standards	9-29.6
Overhead String Lighting	9-29.8
Pedestrian Push Buttons	9-29.19
Rectangular Rapid Flashing	9-29.22

Provided to Builders Exchange of WA, Inc. For usage Conditions Agreement see www.bxwa.com - Always Verify Scal

Beacon and In-Road
Warning Lights

8-20.5 Payment

Section 8-20.5 is supplemented with the following:

The lump sum Contract price for "Illumination System - Complete" shall include all costs associated with installing the overhead string lights in accordance with the manufacturer's recommendations and all applicable details and Special Provisions of the Contract Documents and the Standard Specifications, as well as the relocation of the pedestrian luminaire at the northeast corner of 271st Street NW and 88th Street NW. Work includes but is not limited to any required excavation and backfill, wiring and conduit, junction boxes, splicing, electrical grounding, concrete foundations, support poles and pole bases, as-builts, and all necessary anchors and fasteners in accordance with the details and Special Provisions of the Contract Documents and all applicable Standard Specifications.

"Rectangular Rapid Flashing Beacon – Mid-Block Crossing", per lump sum.
The lump sum Contract price for "Rectangular Rapid Flashing Beacon – Mid-Block Crossing" shall include all labor, equipment, methods, and materials necessary to install the new rapid rectangular flashing beacon and system in accordance with the manufacturer's recommendations and all applicable details and Special Provisions of the Contract Documents and the Standard Specifications. Work includes but is not limited to any required excavation and backfill, wiring and conduit, junction boxes, electrical grounding, concrete foundations, support poles and pole bases, pedestrian push buttons, pedestrian push button posts, flashing lights and brackets, solar panel(s), battery backup, wireless transmitters and receivers, as-builts, and all necessary anchors and fasteners in accordance with the details and Special Provisions of the Contract Documents and all applicable Standard Specifications. New or relocated signing mounted to the pole with the rapid rectangular flashing beacon shall not be included in this unit Contract price.

END OF DIVISION 8

Provided to Builders Exchange of WA, Inc. For usage Conditions Agreement see www.bxwa.com - Always Verify Scal

Division 9
Materials

9-29 Illumination, Signal, Electrical

Light And Signal Standards

Section 9-29.6 is supplemented with the following:

(January 6, 2025 WSDOT GSP)
Traffic Signal Standards

Traffic signal standards shall be furnished and installed in accordance with the methods and materials noted in the applicable Standard Plans, pre-approved plans, or special design plans.

All welds shall comply with the latest AASHTO Standard Specifications for Structural Supports for Highway Signs, Luminaires and Traffic Signals. Welding inspection shall comply with Section 6-03.3(25)A Welding Inspection.

Hardened washers shall be used with all signal arm connecting bolts instead of lockwashers. All signal arm ASTM F 3125 Grade A325 connecting bolts tightening shall comply with Section 6-03.3(33).

Traffic signal standard types, applicable characteristics, and foundation types are as follows:

Type PPB

Pedestrian push button posts and their foundations shall conform to Standard Plan J-20.15.

Type PS, Type I, Type RM, and Type FB

Type PS pedestrian signal standards, Type I vehicle signal standards, Type RM ramp meter signal standards, and Type FB flashing beacon standards shall conform to Standard Plan J-20.16, J-21.15, J-21.16, and J-22.15 respectively, or to one of the following pre-approved plans:

Fabricator	Pre-Approved Drawing No.
Valmont Ind., Inc.	DB01165 Rev. B (4 sheets)
Ameron Pole Products Division	WA15TR10-1 Rev. C (1 sheet) and WA15TR10-2 Rev. C (1 sheet)
Millerbernd Manufacturing, Co.	74514-WA-PED-FB Rev. J (2 sheets)
Millerbernd Manufacturing Co.	74514-WA-PED-SB Rev. K (2 sheets)

Foundations shall be as noted in Standard Plan J-21.10.

Provided to Builders Exchange of WA, Inc. For usage Conditions Agreement see www.bxwa.com - Always Verify Scal

9-29.8 Vacant

Section 9-29.8 including title, is deleted and replaced with the following:

9-29.8 Overhead String Lighting

Overhead string lighting at the mid-block crossing shall be as specified below, or an approved equal.

A5-ZOZO-STN-12”-50K-GSF-WET by Aluz

Support poles for overhead string lighting at the mid-block crossing shall be as specific below, or an approved equal.

RTA-20’-6G-PT-CPL1/xy-FBC-DBLXD by Lithonia

9-29.19 Pedestrian Push Buttons

Section 9-29.19 is supplemented with the following:

Approved AID Equipment
AID equipment shall be one of the following systems, or an approved equal.

Model: **LGS-PBA-PAIR**

Manufacturer:
LightGuard Systems
2292 Airport Blvd.
Santa Rosa, CA 95403
www.lightguardsystems.com

9-29.22 Vacant

Section 9-29.22, including title, is deleted and replaced with the following:

9-29.22 Rectangular Rapid Flashing Beacon (RRFB) and In-Road Warning Lights

The Flashing Beacon shall consist of pole, push button, flashing beacon indications, solar-panel(s), wireless transmitter, control unit, and any associated wiring and mountings.

The Flashing Beacon shall be LightGuard Sytems Part Number LGS-RRFB. The Flashing Beacon shall be solar-powered, consist of black dual light bars, black housing, and black PPB.

The flashing beacon shall remain dark until initiated by activation of the pedestrian push button. Each flashing beacon unit shall be activated by push button and relayed as a system to operate all flashing beacon units simultaneously when any one push button is activated. The flashing beacon units shall simultaneously cease operation after a

Provided to Builders Exchange of WA, Inc. For usage Conditions Agreement see www.bxwa.com - Always Verify Scal

predetermined time limit per the Engineer. Agency Engineer will provide assistance to the Contractor for setting the activation time duration.

In-Road Warning lights shall be LightGuard Systems Part Number LGS-M12/CHS-14, or approved equal.

Pedestrian Push Button

1. One pedestrian push button shall be mounted on each pole identified per the Plans. Push button will activate the flashing beacon system.

2. Push buttons shall be ADA compliant and meet the requirements in Section 9-29.19 and as modified below.

3. Pedestrian push buttons used at flashing beacon locations shall not have the vibro-tactile feature. Pedestrian push buttons used at flashing beacon locations shall not have the red indication light. The pedestrian push button housing shall be black in color. The pedestrian push button shall be white.

4. Pedestrian push buttons shall include MUTCD compliant sign R10-25 with the message "Press Button To Turn On Warning Lights" with a hand symbol (black text and symbols on white background). The sign shall be 9" by 12". Each push button assembly shall have one sign and the push button signing shall be identical to one another. The sign shall be mounted on the same housing as the push button and shall be oriented in the same direction as the push button.

9-38 Vacant

Section 9-38, including title, is replaced with the following:

9-38 Concrete Unit Pavers

9-38.1 Concrete Unit Pavers

Concrete unit pavers shall conform to ASTM C902, *Standard Specification for Solid Concrete Interlocking Paver Units.*

The concrete unit pavers for sidewalk use shall be Mutual Materials, Holland Paver, Rustic Blend Color. The paver shall be 2-3/8 inches thick x 3-15/16 inches wide x 7-7/8 inches long. The block shall be interlocking with no gaps or joints larger than 1/16 inch.

The concrete unit pavers for roadway use shall be Mutual Materials, Holland Paver, Rustic Blend Color. The paver shall be 3-1/8 inches thick x 3-15/16 inches wide x 7-7/8 inches long. The block shall be interlocking with no gaps or joints larger than 1/16 inch.

9-38.2 Bedding Sand

Bedding Sand shall meet the following requirements for grading and quality when placed in hauling vehicles for delivery to the project site, or during manufacture and placement into a temporary stockpile. The exact point of acceptance will be determined by the Engineer.

ASTM C33	
Sieve Size	**Percent Passing**

Provided to Builders Exchange of WA, Inc. For usage Conditions Agreement see www.bxwa.com - Always Verify Scal

3/8”	100
No. 4	95 - 100
No. 8	80 - 100
No. 16	50 - 85
No. 30	25 - 60
No. 50	5 - 30
No. 100	0 - 10
No. 200	0 - 1

Bedding Sand shall be washed, clean, non-plastic, free from deleterious or foreign matter, symmetrically shaped, natural or manufactured from crushed rock. Limestone screenings, stone dust, or sand material that does not conform to the grading requirements of ASTM C33, *Standard Specification for Concrete Aggregates*, shall not be used. Mason sand or sand conforming to ASTM C144, Standard Specification for Aggregate for Masonry Mortar, shall not be used. Sand as hard as practically available shall be used where concrete pavers are subject to vehicular traffic. Sieving shall be performed in accordance with ASTM C136, *Standard Test Method for Sieve Analysis of Fine and Coarse Aggregates*.

9-38.3 Joint Sand

Joint Sand shall meet the following requirements for grading and quality when placed in hauling vehicles for delivery to the project site, or during manufacture and placement into a temporary stockpile. The exact point of acceptance will be determined by the Engineer.

ASTM C144 – Natural Sand		ASTM C144 – Manufactured	
Sieve Size	**Percent Passing**	**Sieve Size**	**Percent Passing**
No. 4	100	No. 4	100
No. 8	95 - 100	No. 8	95 - 100
No. 16	70 - 100	No. 16	70 - 100
No. 30	40 - 75	No. 30	40 - 100
No. 50	10 - 35	No. 50	20 - 40
No. 100	2 - 15	No. 100	10 - 25
No. 200	0 - 1	No. 200	0 - 5

Joint Sand shall be washed, clean, non-plastic, free from deleterious or foreign matter, symmetrically shaped, natural or manufactured from crushed rock. Sand as hard as practically available shall be used where concrete pavers are subject to vehicular traffic. Sieving shall be performed in accordance with ASTM C136, *Standard Test Method for Sieve Analysis of Fine and Coarse Aggregates*.

END OF DIVISION 9

Provided to Builders Exchange of WA, Inc. For usage Conditions Agreement see www.bxwa.com - Always Verify Scal

Appendices
(January 2, 2012)

The following appendices are attached and made a part of this contract:

***

APPENDIX A:
Prevailing Wage Rates

APPENDIX B:
In-Roadway Warning Light Details

APPENDIX C:
Standard Plans

***

Standard Plans
(November 4, 2024 WSDOT GSP)

The Washington State Department of Transportation *Standard Plans* M21-01, published September 2024, is made a part of this Contract with the following revisions:

A-10.30
RISER RING detail (Including SECTION view and RISER RING DIMENSIONS table): The RISER RING detail is deleted from the plan.

INSTALLATION detail, SECTION A: The "1/4"" callout is revised to read "+/- 1/4" (SEE CONTRACT ~ Note: The + 1/4" installation is shown in the Section A view)"

A-40.20
Sheet 1, NOTES 1, 2, 3, and 4 are replaced with the following:

1. Use the ½ inch joint details for bridges with expansion length less than 100 feet and for bridges with L type abutments. Use the 1 inch joint details for other applications.

2. Use detail 5, 6, 7 on steel trusses and timber bridges with concrete bridge deck panels.

3. For details 1, 2, 3, and 4, the item "HMA Joint Seal at Bridge End" shall be used for payment. For details 5 and 6, the item "HMA Joint Seal at Bridge Deck Panel Joint" shall be used for payment. For detail 7, the item "Clean and Seal Bridge Deck Panel Joint" shall be used for payment.

Sheet 2, Detail 8 reference to "6-09.3(6)" is revised to read "6-21.3(7)".

A-50.40

Provided to Builders Exchange of WA, Inc. For usage Conditions Agreement see www.bxwa.com - Always Verify Scal

Sheet 1, Plan View: The callout "BEAM GUARDRAIL TYPE 31 TRANSITION SECTION TYPE 21 OR TYPE 24 (SEE STANDARD PLAN C-25.20 OR C-25.30)" is revised to read "BEAM GUARDRAIL TYPE 31 TRANSITION SECTION TYPE 21, 24, OR 25 (SEE STANDARD PLAN C-25.20, C-25.30, OR C-25.32)"

A-60.40
Note 2 reference to "6-09.3(6)" is revised to read "6-21.3(7)".

B-90.40
Valve Detail – DELETED

C-23.70
Sheet 2, ANCHOR BRACKET ASSEMBLY DETAIL, dimension, "R. 5/16" is revised to read; R. 15/16"
ANCHOR PLATE DETAIL, weld callout (fillet), 1/4" is revised to read; 3/16"

C-60.20
Sheet 1, Plan view, callout – "1/2" (IN) DIAMETER X 6 1/2" (IN) LONG ANCHOR BOLT ~ PER STD. SPEC. SECT. 9-06.5(4) (TYPICAL) (SEE NOTE 7)" is revised to read: "5/8" DIAMETER x 6 1/2" (IN) LONG ANCHOR BOLT ~ PER STD. SPEC. SECT. 9-06.5(4) (TYPICAL) (SEE NOTE 7)"

C-81.15
Sheet 1, General Notes, Add Note 7, to read;"7. The concrete class for the moment slab shall be class 4000 typically and class 4000A when the top of the slab is used as the roadway, or sidewalk, surface. The concrete class for the barrier is defined in Standard Specification Section 6-10.3."

C-85.11
On Section B, the callout "3" EXPANDED POLYSTYRENE AROUND COLUMN (TYP.)" is revised to read "3" EXPANDED POLYSTYRENE OR POLYETHYLENE FOAM AROUND COLUMN (TYP.)"

D-3.09
Sheet 1, Geosynthetic Wall with 2 FT Traffic Surcharge detail, callout – "BARRIER ON WALL ~ SEE Standard Plan D-3.15 or D-3.16" is revised to read: "BARRIER ON WALL ~ SEE Standard Plan C-81.10 and/or C-81.15"

D-3.10
Sheet 1, Typical Section, callout – "FOR WALLS WITH SINGLE SLOPE TRAFFIC BARRIER. USE THE DETAILS ABOVE THE MATCH LINE ON STANDARD PLAN D-3.15" is revised to read; "FOR WALLS WITH SINGLE SLOPE TRAFFIC BARRIER, SEE CONTRACT PLANS"
Sheet 1, Typical Section, callout – "FOR WALLS WITH F-SHAPE TRAFFIC BARRIER. USE THE DETAILS ABOVE THE MATCH LINE ON STANDARD PLAN D-3.16" is revised to read; "FOR WALLS WITH F-SHAPE TRAFFIC BARRIER, SEE CONTRACT PLANS"

D-3.11
Sheet 1, Typical Section, callout – ""B" BRIDGE APPROACH SLAB (SEE BRIDGE PLANS) OR PERMANENT GEOSYNTHETIC WALL BARRIER ~ SEE STANDARD PLANS D-3.15 OR D-3.16" is revised to read; "B" BRIDGE APPROACH SLAB OR MOMENT SLAB (SEE CONTRACT PLANS)

Provided to Builders Exchange of WA, Inc. For usage Conditions Agreement see www.bxwa.com - Always Verify Scal

Sheet 1, Typical Section, callout – "TYPICAL BARRIER ON BRIDGE APPROACH SLAB (SEE BRIDGE PLANS) OR PERMANENT GEOSYNTHETIC WALL BARRIER ~ SEE STANDARD PLANS D-3.15 OR D-3.16" is revised to read; "TYPICAL BARRIER ON BRIDGE APPROACH SLAB OR MOMENT SLAB (SEE CONTRACT PLANS)

D-10.10

Note 7, "If Traffic Barriers are required, See Standard Plans D-15.10, D-15.20 and D-15.30" is revised to read "Traffic Barriers shall not be structurally connected to the Reinforced Concrete Retaining Wall Type 1 and 1SW".

D-10.15

Note 7, "If Traffic Barriers are required, See Standard Plans D-15.10, D-15.20 and D-15.30" is revised to read "Traffic Barriers shall not be structurally connected to the Reinforced Concrete Retaining Wall Type 2 and 2SW".

D-10.30

Wall Type 5 may be used in all cases.

D-10.35

Wall Type 6 may be used in all cases.

D-10.40

Note 5, "If Traffic Barriers are required, See Standard Plans D-15.10, D-15.20 and D-15.30" is revised to read "Traffic Barriers shall not be structurally connected to the Reinforced Concrete Retaining Wall Type 7".

D-10.45

Note 5, "If Traffic Barriers are required, See Standard Plans D-15.10, D-15.20 and D-15.30" is revised to read "Traffic Barriers shall not be structurally connected to the Reinforced Concrete Retaining Wall Type 8".

F-10.18

General Note 1; "Construct curb joints at concrete pavement transverse joint locations. If all adjacent pavement is HMA, see Standard Plam F-30.10 for Curb Expansion and Contraction Joint Spacing." Is revised to read – "See Standard Plan F-30.10 and Standard Specification Section 8-04.3 for Curb Expansion and Contraction Joint details and spacing."

F-30.10

All five instances of the "2.0% MAX." are replaced with "2.1% MAX."

F-40.12

The one instance of "2.0% MAX." is replaced with "2.1% MAX."

Note 7 is replaced with the following:

7. The running slope of curb ramps shall not exceed 8.3% maximum except as noted herein. If the 8.3% running slope creates a ramp that exceeds 15ft, see contract plans for details. Use a single constant slope from bottom of ramp to top of ramp to match into the landing. Do not include the abutting landing in the Curb Ramp length measurement. When a ramp is constructed on a radius, the Curb Ramp length is measured on the inside radius along the back of the walkway.

Section B is amended as follows:

Delete: "15' – 0" MAX. (TYP.)"

Provided to Builders Exchange of WA, Inc. For usage Conditions Agreement see www.bxwa.com - Always Verify Scal

Section C is amended as follows:
Delete: "15' – 0" MAX. (TYP.)"

F-40.14

The one instance of "2.0% MAX." is replaced with "2.1% MAX."
Note 7 is replaced with the following:
7. The running slope of curb ramps shall not exceed 8.3% maximum except as noted herein. If the 8.3% running slope creates a ramp that exceeds 15ft, see contract plans for details. Use a single constant slope from bottom of ramp to top of ramp to match into the landing. Do not include the abutting landing in the Curb Ramp length measurement. When a ramp is constructed on a radius, the Curb Ramp length is measured on the inside radius along the back of the walkway.
Section A is amended as follows:
Delete: "15' – 0" MAX. (TYP.)"
Section C is amended as follows:
Delete: "15' – 0" MAX. (TYP.)"

F-40.15

The one instance of "2.0% MAX." is replaced with "2.1% MAX."
Note 7 is replaced with the following:
7. The running slope of curb ramps shall not exceed 8.3% maximum except as noted herein. If the 8.3% running slope creates a ramp that exceeds 15ft, see contract plans for details. Use a single constant slope from bottom of ramp to top of ramp to match into the landing. Do not include the abutting landing in the Curb Ramp length measurement.
Section A is amended as follows:
Delete: "15' – 0" MAX. (TYP.)"

F-40.16

The one instance of "2.0% MAX." is replaced with "2.1% MAX."
Note 8 is replaced with the following:
7. The running slope of curb ramps shall not exceed 8.3% maximum except as noted herein. If the 8.3% running slope creates a ramp that exceeds 15ft, see contract plans for details. Use a single constant slope from bottom of ramp to top of ramp to match into the landing. Do not include the abutting landing in the Curb Ramp length measurement.
Section A is amended as follows:
Delete: "15' – 0" MAX. (TYP.)"
Section B is amended as follows:
Delete: "15' – 0" MAX. (TYP.)"

F-80.10

The one instance of "2.0% MAX." is replaced with "2.1% MAX."
Note 6 is replaced with the following:
The running slope of the Pedestrian Ramp shall not exceed 8.3% maximum except as noted herein. If the 8.3% running slope creates a ramp that exceeds 15ft, see contract plans for details. Use a single constant slope from bottom of ramp to top of ramp to match into the sidewalk.
Section A is amended as follows:
Delete: "15" Max."

J-10.10

Provided to Builders Exchange of WA, Inc. For usage Conditions Agreement see www.bxwa.com - Always Verify Scal

Sheet 4 of 6, "Foundation Size Reference Table", PAD WIDTH column, Type 33xD=6' – 3" is revised to read: 7' – 3". Type 342LX / NEMA P44=5' – 10" is revised to read: 6' – 10"
Sheet 5 of 6, Plan View, "FOR EXAMPLE PAD SHOWN HERE:, "first bullet" item, "-SPACE BETWEEN TYPE B MOD. CABINET AND 33x CABINET IS 6" (IN)" IS REVISED TO READ: "SPACE BETWEEN TYPE B MOD. CABINET (BACK OF ALL CHANNEL STEEL) AND 33x CABINET IS 6" (IN) (CHANNEL STEEL ADDS ABOUT 5" (IN)"

J-10.16
Key Note 1, Standard Plan J-10.30 revised to Standard Plan J-10.14

J-10.17
Key Note 1, Standard Plan J-10.30 revised to Standard Plan J-10.14

J-10.18
Key Note 1, Standard Plan J-10.30 revised to Standard Plan J-10.14

J-20.10
DELETED

J-20.11
DELETED

J-20.26
Add Note 1, "1. One accessible pedestrian pushbutton station per pedestrian pushbutton post."
Add General Note 2, to read: "Signs shown are for locations with pedestrian signal displays (Accessible Pedestrian Signals/APS). Accessible information device (AID) pushbuttons signs not shown."
Revise View Titles (Both Sheets) to read: "ACCESSIBLE PEDESTRIAN PUSHBUTTON ASSEMBLY"

J-20.16
View A, callout, was – LOCK NIPPLE, is revised to read; CHASE NIPPLE

J-21.10
Sheet 1, Anchor Bolt Template, callout; "9" (IN) BOLT CIRCLE" is revised to read: "9" (IN) DIA.BOLT CIRCLE"
Base Plate Detail, callout; "3/4" (IN) STEEL PLATE WITH HOLE = POLE BASE + 1/6" (IN)" IS REVISED TO READ; "3/4" (IN) STEEL PLATE WITH HOLE = POLE BASE + 1/16" (IN)"
Flat Foundation Detail – Elevation, callout; "ANCHOR BOLTS ~ ¾" (IN) x 30" (IN) FULL THREAD ~ THREE REQ'D. PER ASSEMBLY" is revised to read; "ANCHOR BOLTS ~ ¾" (IN) x 30" (IN) FULL THREAD ~ FOUR REQ'D. PER ASSEMBLY"
Flat Foundation Detail – Elevation, dimension; 4' – 0" is revised to read; "4' – 0" ROUND OR 3' – 0" SQUARE"

J-21.15
Partial View, callout, was – LOCK NIPPLE ~ 1 ½" DIAM., is revised to read; CHASE NIPPLE ~ 1 ½" (IN) DIAM.

J-28.30

Provided to Builders Exchange of WA, Inc. For usage Conditions Agreement see www.bxwa.com - Always Verify Scal

General Note 13 – "See Standard Plans C-8b and C-85.14 for steel light standards on traffic barrier" is revised to read; "See Standard Plan C-85.15 for steel light standards on traffic barrier."

J-40.10

Sheet 2 of 2, Detail F, callout, "12 – 13 x 1 ½" S.S. PENTA HEAD BOLT AND 12" S. S. FLAT WASHER" is revised to read; "12 – 13 x 1 ½" S.S. PENTA HEAD BOLT AND 1/2" (IN) S. S. FLAT WASHER"

J-40.36

Note 1, second sentence; "Finish shall be # 2B for backbox and # 4 for the cover." Is revised to read; "Finish shall be # 2B for barrier box and HRAP (Hot Rolled Annealed and Pickled) for the cover.

J-40.37

Note 1, second sentence; "Finish shall be # 2B for backbox and # 4 for the cover." Is revised to read; "Finish shall be # 2B for barrier box and HRAP (Hot Rolled Annealed and Pickled) for the cover.

J-75.20

Key Notes, note 16, second bullet point, was: "1/2" (IN) x 0.45" (IN) Stainless Steel Bands", add the following to the end of the note: "Alternate: Stainless steel cable with stainless steel ends, nuts, bolts, and washers may be used in place of stainless steel bands and associated hardware."

J-75.55

Notes, Note A1, Revise reference, was – G-90.29, should be – G-90.20.

L-5.10

Add new general Note 9 on sheet 1 – "9. The top of wall in Section A on Sheet 1 shall be located as follows: 1) flush with the finished grade when placed within the deflection distance of the long span guardrail system (Std. Plan C-20.40), 2) Two inches maximum above finished grade when placed behind a box culvert guardrail steel post system (Std. Plan C-20.41 or C-20.43), 3) Six inches minimum for all other applications. The bottom rail shall be located at mid height between the top rail and the top of structure."

M-20.30

Wide Dotted Lane Line Detail, reference below title, (SEE NOTE 6) is revised to read: (SEE NOTE 5)

M-40.10

Guide Post Type ~ Reflective Sheeting Applications Table, remove reference - "(SEE NOTE 5)"

The following are the Standard Plan numbers applicable at the time this project was advertised. The date shown with each plan number is the publication approval date shown in the lower right-hand corner of that plan. Standard Plans showing different dates shall not be used in this contract.

A-10.10-00 ..... 8/7/07	A-30.35-00 ..... 10/12/07	A-50.10-02 ..... 7/18/24
A-10.20-00 ..... 10/5/07	A-40.00-01 ..... 7/6/22	A-50.40-01 ..... 8/17/21

Provided to Builders Exchange of WA, Inc. For usage Conditions Agreement see www.bxwa.com - Always Verify Scal

A-10.30-00 ..... 10/5/07
A-20.10-00 ..... 8/31/07
A-30.10-00 ..... 11/8/07
A-30.30-01 ..... 6/16/11
A-40.10-04 ..... 7/31/19
A-40.15-00 ..... 8/11/09
A-40.20-04 ..... 1/18/17
A-40.50-03 ..... 9/12/23
A-60.10-03 ..... 12/23/14
A-60.20-03 ..... 12/23/14
A-60.30-01 ..... 6/28/18
A-60.40-00 ..... 8/31/07

1

B-5.20-03 ..... 9/9/20
B-5.40-02 ..... 1/26/17
B-5.60-02 ..... 1/26/17
B-10.20-03 ..... 8/23/23
B-10.40-02 ..... 8/17/21
B-10.70-03 ..... 8/23/23
B-15.20-01 ..... 2/7/12
B-15.40-01 ..... 2/7/12
B-15.60-02 ..... 1/26/17
B-20.20-02 ..... 3/16/12
B-20.40-04 ..... 2/27/18
B-20.60-03 ..... 3/15/12
B-25.20-02 ..... 2/27/18
B-25.60-03 ..... 8/23/23
B-30.05-00 ..... 9/9/20
B-30.10-03 ..... 2/27/18
B-30.15-00 ..... 2/27/18
B-30.20-04 ..... 2/27/18
B-30.30-03 ..... 2/27/18
B-30.50-03 ..... 2/27/18
B-30.60-00 ..... 9/9/20
B-30.40-03 ..... 2/27/18
B-30.70-04 ..... 2/27/18
B-30.80-01 ..... 2/27/18
B-30.90-02 ..... 1/26/17
B-35.20-00 ..... 6/8/06
B-35.40-01 ..... 8/23/23
B-40.20-00 ..... 6/1/06
B-40.40-02 ..... 1/26/17
B-45.20-01 ..... 7/11/17
B-45.40-01 ..... 7/21/17
B-50.20-00 ..... 6/1/06
B-55.20-03 ..... 8/17/21
B-60.20-02 ..... 9/9/20
B-60.40-01 ..... 2/27/18
B-65.20-01 ..... 4/26/12
B-65.40-00 ..... 6/1/06
B-70.20-01 ..... 3/15/22
B-75.20-03 ..... 8/17/21
B-75.50-02 ..... 3/15/22
B-70.60-01 ..... 1/26/17
B-75.60-00 ..... 6/8/06
B-80.20-00 ..... 6/8/06
B-80.40-00 ..... 6/1/06
B-85.10-01 ..... 6/10/08
B-85.20-00 ..... 6/1/06
B-85.30-00 ..... 6/1/06
B-85.40-00 ..... 6/8/06
B-85.50-01 ..... 6/10/08
B-90.10-00 ..... 6/8/06
B-90.20-00 ..... 6/8/06
B-90.30-00 ..... 6/8/06
B-90.40-01 ..... 1/26/17
B-90.50-00 ..... 6/8/06
B-95.20-02 ..... 8/17/21
B-95.40-01 ..... 6/28/18

2

C-1 ..... 9/8/22
C-1b 10/12/23
C-1d 10/31/03
C-6a 9/8/22
C-7 ..... 9/8/22
C-7a 9/8/22
C-20.10-09 ..... 10/12/23
C-20.14-05 ..... 9/8/22
C-20.15-03 ..... 10/12/23
C-20.18-04 ..... 9/8/22
C-20.40-10 ..... 10/12/23
C-20.41-05 ..... 7/18/24
C-20.43-01 ..... 7/18/24
C-20.44-00 ..... 8/13/24
C-20.45-03 ..... 9/8/22
C-20.55-00 ..... 7/30/24
C-22.16-08 ..... 10/17/23
C-22.40-11 ..... 7/21/24
C-22.45-07 ..... 7/21/24
C-23.70-01 ..... 10/16/23
C.24.10-05 ..... 7/21/24
C-24.15-00 ..... 3/15/22
C-25.20-07 ..... 8/20/21
C-25.22-06 ..... 8/20/21
C-25.26-05 ..... 8/20/21
C-25.30-01 ..... 8/20/21
C-25.32-00 ..... 7/29/24
C-25.80-05 ..... 8/12/19
C-60.10-04 ..... 7/21/24
C-60.15-01 ..... 7/21/24
C-60.20-01 ..... 9/8/22
C-60.30-02 ..... 7/21/24
C-60.40-01 ..... 7/21/24
C-60.45-01 ..... 7/21/24
C-60.50-01 ..... 7/21/24
C-60.60-01 ..... 7/21/24
C-60.70-01 ..... 9/8/22
C-60.80-02 ..... 7/21/24
C-70.10-04 ..... 10/16/23
C-70.15-01 ..... 7/21/24
C-75.10-02 ..... 9/16/20
C-75.20-03 ..... 8/20/21
C-75.30-03 ..... 8/20/21
C-80.10-03 ..... 10/16/23
C-80.20-01 ..... 6/11/14
C-80.30-02 ..... 8/20/21
C-80.40-01 ..... 6/11/14
C-85.10-00 ..... 4/8/12
C-85.11-01 ..... 9/16/20
C-85.15-03 ..... 10/17/23
C-85-18-03 ..... 9/8/22
C-81.10-00 ..... 9/12/23
C-81.15-00 ..... 9/12/23

3

D-2.36-03 ..... 6/11/14
D-2.46-02 ..... 8/13/21
D-2.84-00 ..... 11/10/05
D-2.92-01 ..... 4/26/22
D-3.09-00 ..... 5/17/12
D-3.10-01 ..... 5/29/13
D-3.11-03 ..... 6/11/14
D-4 ..... 12/11/98
D-6 ..... 6/19/98
D-10.10-01 ..... 12/2/08
D-10.15-01 ..... 12/2/08
D-10.20-01 ..... 8/7/19
D-10.25-01 ..... 8/7/19
D-10.30-00 ..... 7/8/08
D-10.35-00 ..... 7/8/08
D-10.40-01 ..... 12/2/08
D-10.45-01 ..... 12/2/08
D-20.10-00 ..... 10/9/23

Provided to Builders Exchange of WA, Inc. For usage Conditions Agreement see www.bxwa.com - Always Verify Scal

1

E-1 ..... 2/21/07	E-4 ..... 8/27/03	E-20.10-00 ..... 9/12/23
E-2 ..... 5/29/98	E-4a 8/27/03	E-20.20-00 ..... 10/4/23

2

F-10.12-04 ..... 9/24/20	F-10.62-02 ..... 4/22/14	F-40.15-04 ..... 9/25/20
F-10.16-00 ..... 12/20/06	F-10.64-03 ..... 4/22/14	F-40.16-03 ..... 6/29/16
F-10.18-04 ..... 6/28/24	F-30.10-04 ..... 9/25/20	F-45.10-05 ..... 6/4/24
F-10.40-04 ..... 9/24/20	F-40.12-03 ..... 6/29/16	F-80.10-04 ..... 7/15/16
F-10.42-00 ..... 1/23/07	F-40.14-03 ..... 6/29/16	

3

G-10.10-00 ..... 9/20/07	G-24.50-05 ..... 8/7/19	G-90.10-03 ..... 7/11/17
G-20.10-03 ..... 8/20/21	G-24.60-05 ..... 6/28/18	G-90.20-05 ..... 7/11/17
G-22.10-04 ..... 6/28/18	G-25.10-05 ..... 9/16/20	G-90.30-04 ..... 7/11/17
G-24.10-00 ..... 11/8/07	G-26.10-00 ..... 7/31/19	G-95.10-02 ..... 6/28/18
G-24.20-01 ..... 2/7/12	G-30.10-04 ..... 6/23/15	G-95.20-03 ..... 6/28/18
G-24.30-02 ..... 6/28/18	G-50.10-03 ..... 6/28/18	G-95.30-03 ..... 6/28/18
G-24.40-07 ..... 6/28/18		

4

H-10.10-01 ..... 6/2/24	H-30.10-00 ..... 10/12/07	H-70.10-02 ..... 8/17/21
H-10.11-00 ..... 6/2/24	H-32.10-00 ..... 9/20/07	H-70.20-02 ..... 8/17/21
H-10.15-01 ..... 6/2/24	H-60.10-01 ..... 7/3/08	
H-10.16-00 ..... 6/2/24	H-60.20-01 ..... 7/3/08	

5

I-10.10-01 ..... 8/11/09	I-30.20-00 ..... 9/20/07	I-40.20-00 ..... 9/20/07
I-30.10-02 ..... 3/22/13	I-30.30-02 ..... 6/12/19	I-50.20-02 ..... 7/6/22
I-30.15-02 ..... 3/22/13	I-30.40-02 ..... 6/12/19	I-60.10-01 ..... 6/10/13
I-30.16-01 ..... 7/11/19	I-30.60-02 ..... 6/12/19	I-60.20-01 ..... 6/10/13
I-30.17-01 ..... 6/12/19	I-40.10-00 ..... 9/20/07	I-80.10-02 ..... 7/15/16

6

J-05.50-00 ..... 8/30/22	J-26.10-03 ..... 7/21/16	J-50.05-00 ..... 7/21/17
J-10 ..... 7/18/97	J-26.15-01 ..... 5/17/12	J-50.10-01 ..... 7/31/19
J-10.10-04 ..... 9/16/20	J-26.20-01 ..... 6/28/18	J-50.11-02 ..... 7/31/19
J-10.12-00 ..... 9/16/20	J-27.10-01 ..... 7/21/16	J-50.12-02 ..... 8/7/19
J-10.14-00 ..... 9/16/20	J-27.15-00 ..... 3/15/12	J-50.13-01 ..... 8/30/22
J-10.15-01 ..... 6/11/14	J-28.01-00 ..... 8/30/22	J-50.15-01 ..... 7/21/17
J-10.16-02 ..... 8/18/21	J-28.10-02 ..... 8/7/19	J-50.16-01 ..... 3/22/13
J-10.17-02 ..... 8/18/21	J-28.22-00 ..... 8/07/07	J-50.18-00 ..... 8/7/19
J-10.18-02 ..... 8/18/21	J-28.24-02 ..... 9/16/20	J-50.19-00 ..... 8/7/19
J-10.20-04 ..... 8/18/21	J-28.26-01 ..... 12/02/08	J-50.20-00 ..... 6/3/11
J-10.21-02 ..... 8/18/21	J-28.30-04 ..... 6/18/24	J-50.25-00 ..... 6/3/11
J-10.22-03 ..... 10/4/23	J-28.40-02 ..... 6/11/14	J-50.30-00 ..... 6/3/11
J-10.25-01 ..... 6/21/24	J-28.42-01 ..... 6/11/14	J-60.05-01 ..... 7/21/16
J-10.26-00 ..... 8/30/22	J-28.43-01 ..... 6/28/18	J-60.11-00 ..... 5/20/13
J-12.15-00 ..... 6/28/18	J-28.45-03 ..... 7/21/16	J-60.12-00 ..... 5/20/13
J-12.16-00 ..... 6/28/18	J-28.50-03 ..... 7/21/16	J-60.13-00 ..... 6/16/10
J-15.10-01 ..... 6/11/14	J-28.60-03 ..... 8/27/21	J-60.14-01 ..... 7/31/19
J-15.15-02 ..... 7/10/15	J-28.70-04 ..... 8/30/22	J-75.10-02 ..... 7/10/15
J-20.01-01 ..... 6/21/24	J-29.10-02 ..... 8/26/22	J-75.20-01 ..... 7/10/15
J-20.05-00 ..... 6/21/24	J-29.15-01 ..... 7/21/16	J-75.30-02 ..... 7/10/15
J-20.10-05 ..... 10/4/23	J-29.16-02 ..... 7/21/16	J-75.50-00 ..... 8/30/22
J-20.11-03 ..... 7/31/19	J-30.10-01 ..... 8/26/22	J-75.55-00 ..... 8/30/22

Provided to Builders Exchange of WA, Inc. For usage Conditions Agreement see www.bxwa.com - Always Verify Scal

J-20.15-04 ..... 6/21/24	J-40.01-00 ..... 8/30/22	J-80.05-00 .....8/30/22
J-20.16-02 ..... 6/30/14	J-40.05-00 ..... 7/21/16	J-80.10-01 .....8/18/21
J-20.20-02 ..... 5/20/13	J-40.10-04 ..... 4/28/16	J-80.12-00 .....8/18/21
J-20.26-01 ..... 7/12/12	J-40.20-03 ..... 4/28/16	J-80.15-00 .....6/28/18
J-21.10-05 ..... 6/21/24	J-40.30-04 ..... 4/28/16	J-81.10-02 .....8/18/21
J-21.15-01 ..... 6/10/13	J-40.35-01 ..... 5/29/13	J-81.12-00 .....9/3/21
J-21.16-02 ..... 6/21/24	J-40.36-02 ..... 7/21/17	J-84.05-00 .....8/30/22
J-21.17-01 ..... 6/10/13	J-40.37-02 ..... 7/21/17	J-86.10-00 .....6/28/18
J-21.20-01 ..... 6/10/13	J-40.38-01 ..... 5/20/13	J-90.10-03 .....6/28/18
J-22.15-03 ..... 6/21/24	J-40.39-00 ..... 5/20/13	J-90.20-03 .....6/28/18
J-22.16-03 ..... 7/10/15	J-40.40-02 ..... 7/31/19	J-90.21-02 .....6/28/18
J-22.17-00 ..... 6/21/24	J-45.36-00 ..... 7/21/17	J-90.50-00 .....6/28/18

1

K-70.20-01 ..... 6/1/16	K-80.32-00..... 8/17/21	K-80.35-01.....9/16/20
K-80.10-02 ..... 9/25/20	K-80.34-00..... 8/17/21	K-80.37-01.....9/16/20

2

L-5.10-02.....6/5/24	L-20.10-03 ..... 7/14/15	L-40.20-02 .....6/21/12
L-5.15-00..... 9/19/22	L-30.10-02 .....6/11/14	L-70.10-01 .....5/21/08
L-10.10-02..... 6/21/12	L-40.15-01 .....6/16/11	L-70.20-01 .....5/21/08

3

M-1.20-04..... 9/25/20	M-9.60-00 ..... 2/10/09	M-24.66-00 ..... 7/11/17
M-1.40-03..... 9/25/20	M-11.10-04..... 8/2/22	M-40.10-04 .....10/17/23
M-1.60-03..... 9/25/20	M-12.10-04 ..... 6/28/24	M-40.20-00 .....10/12/07
M-1.80-03..... 6/3/11	M-15.10-02 ..... 7/17/23	M-40.30-01 ..... 7/11/17
M-2.20-03..... 7/10/15	M-17.10-02 ..... 7/3/08	M-40.40-00 .....9/20/07
M-2.21-00..... 7/10/15	M-20.10-04 ..... 8/2/22	M-40.50-00 .....9/20/07
M-3.10-04..... 9/25/20	M-20.20-02 ..... 4/20/15	M-40.60-00 .....9/20/07
M-3.20-04.....8/2/22	M-20.30-05 ..... 6/28/24	M-60.10-01 .....6/3/11
M-3.30-04..... 9/25/20	M-20.40-03 ..... 6/24/14	M-60.20-03 .....8/17/21
M-3.40-04..... 9/25/20	M-20.50-02 .....6/3/11	M-65.10-03 .....8/17/21
M-3.50-03..... 9/25/20	M-24.20-02 ..... 4/20/15	M-80.10-01 .....6/3/11
M-5.10-03..... 9/25/20	M-24.40-02 ..... 4/20/15	M-80.20-00 .....6/10/08
M-7.50-01..... 1/30/07	M-24.60-04 ..... 6/24/14	M-80.30-00 .....6/10/08
M-9.50-02..... 6/24/14	M-24.65-00 .....7/11/17	

4

Provided to Builders Exchange of WA, Inc. For usage Conditions Agreement see www.bxwa.com - Always Verify Scal

APPENDIX A
WASHINGTON STATE PREVAILING WAGE RATES FOR SNOHOMISH COUNTY

Prevailing wage rates for this project area and size can be found at the Washington State Department of Bureau of Labor Industries or on the internet at:

https://secure.lni.wa.gov/wagelookup/

Provided to Builders Exchange of WA, Inc. For usage Conditions Agreement see www.bxwa.com - Always Verify Scal

State of Washington
Department of Labor & Industries
Prevailing Wage Section - Telephone 360-902-5335
PO Box 44540, Olympia, WA 98504-4540

Washington State Prevailing Wage
The PREVAILING WAGES listed here include both the hourly wage rate and the hourly rate of fringe benefits. On public works projects, worker's wage and benefit rates must add to not less than this total. A brief description of overtime calculation requirements are provided on the Benefit Code Key.

Journey Level Prevailing Wage Rates for the Effective Date: 05/22/2025

Snohomish County

Trade	Job Classification	Wage	Holiday	Overtime	Note
Asbestos Abatement Workers	Journey Level	$63.87	**5D**	**1H**	
Boilermakers	Journey Level	$80.89	**5N**	**1C**	
Brick Mason	Journey Level	$71.82	**7E**	**1N**	
Brick Mason	Pointer-Caulker-Cleaner	$71.82	**7E**	**1N**	
Building Service Employees	Janitor	$16.66		**1**	
Building Service Employees	Shampooer	$16.66		**1**	
Building Service Employees	Waxer	$16.66		**1**	

Provided to Builders Exchange of WA, Inc. For usage Conditions Agreement see www.bxwa.com - Always Verify Scal

Building Service Employees	Window Cleaner	$16.66		1	
Cabinet Makers (In Shop)	Journey Level	$27.33	5C	2M	
Carpenters	Acoustical Worker	$78.96	15J	11U	
Carpenters	Bridge Dock and Wharf Carpenter	$80.50	15J	11U	9L
Carpenters	Floor Layer & Floor Finisher	$78.96	15J	11U	
Carpenters	General Carpenter	$78.96	15J	11U	
Carpenters	Scaffold Erector	$78.96	15J	11U	
Cement Masons	Application of all Composition Mastic	$77.30	15J	4U	
Cement Masons	Application of all Epoxy Material	$76.78	15J	4U	
Cement Masons	Application of all Plastic Material	$77.30	15J	4U	
Cement Masons	Application of Sealing Compound	$76.78	15J	4U	
Cement Masons	Application of Underlayment	$77.30	15J	4U	
Cement Masons	Building General	$76.78	15J	4U	
Cement Masons	Composition or Kalman Floors	$77.30	15J	4U	

Provided to Builders Exchange of WA, Inc. For usage Conditions Agreement see www.bxwa.com - Always Verify Scal

Cement Masons	Concrete Paving	$76.78	**15J**	**4U**
Cement Masons	Curb & Gutter Machine	$77.30	**15J**	**4U**
Cement Masons	Curb & Gutter, Sidewalks	$76.78	**15J**	**4U**
Cement Masons	Curing Concrete	$76.78	**15J**	**4U**
Cement Masons	Finish Colored Concrete	$77.30	**15J**	**4U**
Cement Masons	Floor Grinding	$77.30	**15J**	**4U**
Cement Masons	Floor Grinding/Polisher	$76.78	**15J**	**4U**
Cement Masons	Green Concrete Saw, self-powered	$77.30	**15J**	**4U**
Cement Masons	Grouting of all Plates	$76.78	**15J**	**4U**
Cement Masons	Grouting of all Tilt-up Panels	$76.78	**15J**	**4U**
Cement Masons	Gunite Nozzleman	$77.30	**15J**	**4U**
Cement Masons	Hand Powered Grinder	$77.30	**15J**	**4U**
Cement Masons	Journey Level	$76.78	**15J**	**4U**
Cement Masons	Patching Concrete	$76.78	**15J**	**4U**
Cement Masons	Pneumatic Power Tools	$77.30	**15J**	**4U**
Cement Masons	Power Chipping & Brushing	$77.30	**15J**	**4U**

Provided to Builders Exchange of WA, Inc. For usage Conditions Agreement see www.bxwa.com - Always Verify Scal

Cement Masons	Sand Blasting Architectural Finish	$77.30	**15J**	**4U**	
Cement Masons	Screed & Rodding Machine	$77.30	**15J**	**4U**	
Cement Masons	Spackling or Skim Coat Concrete	$76.78	**15J**	**4U**	
Cement Masons	Troweling Machine Operator	$77.30	**15J**	**4U**	
Cement Masons	Troweling Machine Operator on Colored Slabs	$77.30	**15J**	**4U**	
Cement Masons	Tunnel Workers	$77.30	**15J**	**4U**	
Divers & Tenders	Bell/Vehicle/Submersible Operator (not under pressure)	$156.25	**15J**	**11T**	**9I**
Divers & Tenders	Dive Supervisor	$157.75	**15J**	**11T**	**9I**
Divers & Tenders	Diver	$156.25	**15J**	**11T**	**9I**
Divers & Tenders	Diver Tender	$86.86	**15J**	**11T**	**9I**
Divers & Tenders	Hyperbaric Worker - Compressed Air Worker 0-30.00 PSI	$109.76	**15J**	**11U**	
Divers & Tenders	Hyperbaric Worker - Compressed Air Worker 31.01-44.00 PSI	$118.99	**15J**	**11U**	

Provided to Builders Exchange of WA, Inc. For usage Conditions Agreement see www.bxwa.com - Always Verify Scal

Divers & Tenders	Hyperbaric Worker - Compressed Air Worker 44.01 - 54.00 PSI	$128.22	**15J**	**11U**	
Divers & Tenders	Hyperbaric Worker - Compressed Air Worker 54.01 - 60.00 PSI	$137.45	**15J**	**11U**	
Divers & Tenders	Hyperbaric Worker - Compressed Air Worker 60.01 - 64.00 PSI	$146.67	**15J**	**11U**	
Divers & Tenders	Hyperbaric Worker - Compressed Air Worker 64.01 - 68.00 PSI	$155.90	**15J**	**11U**	
Divers & Tenders	Hyperbaric Worker - Compressed Air Worker 68.01 - 70.00 PSI	$165.13	**15J**	**11U**	
Divers & Tenders	Hyperbaric Worker - Compressed Air Worker 70.01 - 72.00 PSI	$174.36	**15J**	**11U**	
Divers & Tenders	Hyperbaric Worker - Compressed Air Worker 72.01 - 74.00 PSI	$183.59	**15J**	**11U**	
Divers & Tenders	Lead Diver (Dive Master)	$101.32	**15J**	**11T**	**9I**
Divers & Tenders	Manifold Operator (Life Support Technician)	$86.86	**15J**	**11T**	**9I**
Divers & Tenders	Remote Operated Vehicle Operator/Technician	$86.86	**15J**	**11T**	**9I**

Provided to Builders Exchange of WA, Inc. For usage Conditions Agreement see www.bxwa.com - Always Verify Scal

Divers & Tenders	Remote Operated Vehicle Operator/Technician	$86.86	**15J**	**11T**	**9I**
Divers & Tenders	Remote Operated Vehicle Tender	$80.55	**15J**	**11T**	**9I**
Divers & Tenders	Stand-by Diver	$96.32	**15J**	**11T**	**9I**
Dredge Workers	Assistant Engineer	$85.37	**5D**	**3F**	
Dredge Workers	Assistant Mate (Deckhand)	$84.71	**5D**	**3F**	
Dredge Workers	Boatmen	$85.37	**5D**	**3F**	
Dredge Workers	Engineer Welder	$87.02	**5D**	**3F**	
Dredge Workers	Leverman, Hydraulic	$88.77	**5D**	**3F**	
Dredge Workers	Mates	$85.37	**5D**	**3F**	
Dredge Workers	Oiler	$84.71	**5D**	**3F**	
Drywall Applicator	Journey Level	$78.76	**15O**	**11S**	
Drywall Tapers	Journey Level	$78.76	**15O**	**11S**	
Electrical Fixture Maintenance Workers	Journey Level	$16.66		**1**	
Electricians - Inside	Cable Splicer	$95.85	**7H**	**1E**	
Electricians - Inside	Construction Stock Person	$46.03	**7H**	**1D**	

Provided to Builders Exchange of WA, Inc. For usage Conditions Agreement see www.bxwa.com - Always Verify Scal

Electricians - Inside	Journey Level	$89.75	**7H**	**1E**	
Electricians - Motor Shop	Craftsman	$16.66		**1**	
Electricians - Motor Shop	Journey Level	$16.66		**1**	
Electricians - Powerline Construction	Cable Splicer	$102.42	**5A**	**4D**	
Electricians - Powerline Construction	Certified Line Welder	$93.99	**5A**	**4D**	
Electricians - Powerline Construction	Groundperson	$59.30	**5A**	**4D**	
Electricians - Powerline Construction	Heavy Line Equipment Operator	$93.99	**5A**	**4D**	
Electricians - Powerline Construction	Journey Level Lineperson	$93.99	**5A**	**4D**	
Electricians - Powerline Construction	Line Equipment Operator	$80.96	**5A**	**4D**	
Electricians - Powerline Construction	Meter Installer	$59.30	**5A**	**4D**	**8W**
Electricians - Powerline Construction	Pole Sprayer	$93.99	**5A**	**4D**	
Electricians - Powerline Construction	Powderperson	$69.84	**5A**	**4D**	
Electronic Technicians	Electronic Technicians Journey Level	$58.51	**5B**	**1B**	

Provided to Builders Exchange of WA, Inc. For usage Conditions Agreement see www.bxwa.com - Always Verify Scal

Elevator Constructors	Mechanic	$115.14	7D	4A	
Elevator Constructors	Mechanic In Charge	$124.53	7D	4A	
Fabricated Precast Concrete Products	Journey Level	$16.66		1	
Fabricated Precast Concrete Products	Journey Level - In-Factory Work Only	$16.66		1	
Fence Erectors	Fence Erector	$54.65	15J	11P	8Y
Fence Erectors	Fence Laborer	$54.65	15J	11P	8Y
Flaggers	Journey Level	$54.65	15J	11P	8Y
Glaziers	Journey Level	$82.16	7L	1Y	
Heat & Frost Insulators And Asbestos Workers	Journey Level	$91.81	15H	11C	
Heating Equipment Mechanics	Journey Level	$102.92	7F	1E	
Hod Carriers & Mason Tenders	Journey Level	$67.38	15J	11P	8Y
Industrial Power Vacuum Cleaner	Journey Level	$16.66		1	
Inland Boatmen	Boat Operator	$71.28	5B	1K	
Inland Boatmen	Cook	$69.70	5B	1K	
Inland Boatmen	Deckhand	$70.00	5B	1K	

Provided to Builders Exchange of WA, Inc. For usage Conditions Agreement see www.bxwa.com - Always Verify Scal

Inland Boatmen	Deckhand Engineer	$69.55	**5B**	**1K**
Inland Boatmen	Launch Operator	$71.23	**5B**	**1K**
Inland Boatmen	Mate	$89.12	**5B**	**1K**
Inspection/Cleaning/Sealing Of Sewer & Water Systems By Remote Control	Cleaner Operator	$51.27	**15M**	**11O**
Inspection/Cleaning/Sealing Of Sewer & Water Systems By Remote Control	Foamer Operator	$51.27	**15M**	**11O**
Inspection/Cleaning/Sealing Of Sewer & Water Systems By Remote Control	Grout Truck Operator	$51.27	**15M**	**11O**
Inspection/Cleaning/Sealing Of Sewer & Water Systems By Remote Control	Head Operator	$49.20	**15M**	**11O**
Inspection/Cleaning/Sealing Of Sewer & Water Systems By Remote Control	Technician	$42.99	**15M**	**11O**
Inspection/Cleaning/Sealing Of Sewer & Water Systems By Remote Control	TV Truck Operator	$46.10	**15M**	**11O**
Insulation Applicators	Journey Level	$78.96	**15J**	**11U**
Ironworkers	Journeyman	$90.82	**15K**	**11N**

Provided to Builders Exchange of WA, Inc. For usage Conditions Agreement see www.bxwa.com - Always Verify Scal

Laborers	Air, Gas Or Electric Vibrating Screed	$63.87	**15J**	**11P**	**8Y**
Laborers	Airtrac Drill Operator	$65.75	**15J**	**11P**	**8Y**
Laborers	Ballast Regular Machine	$63.87	**15J**	**11P**	**8Y**
Laborers	Batch Weighman	$54.65	**15J**	**11P**	**8Y**
Laborers	Brick Pavers	$63.87	**15J**	**11P**	**8Y**
Laborers	Brush Cutter	$63.87	**15J**	**11P**	**8Y**
Laborers	Brush Hog Feeder	$63.87	**15J**	**11P**	**8Y**
Laborers	Burner	$63.87	**15J**	**11P**	**8Y**
Laborers	Caisson Worker	$65.75	**15J**	**11P**	**8Y**
Laborers	Carpenter Tender	$63.87	**15J**	**11P**	**8Y**
Laborers	Cement Dumper-paving	$64.98	**15J**	**11P**	**8Y**
Laborers	Cement Finisher Tender	$63.87	**15J**	**11P**	**8Y**
Laborers	Change House Or Dry Shack	$63.87	**15J**	**11P**	**8Y**
Laborers	Chipping Gun (30 Lbs. And Over)	$64.98	**15J**	**11P**	**8Y**
Laborers	Chipping Gun (Under 30 Lbs.)	$63.87	**15J**	**11P**	**8Y**
Laborers	Choker Setter	$63.87	**15J**	**11P**	**8Y**

Provided to Builders Exchange of WA, Inc. For usage Conditions Agreement see www.bxwa.com - Always Verify Scal

Laborers	Chuck Tender	$63.87	**15J**	**11P**	**8Y**
Laborers	Clary Power Spreader	$64.98	**15J**	**11P**	**8Y**
Laborers	Clean-up Laborer	$63.87	**15J**	**11P**	**8Y**
Laborers	Concrete Dumper/Chute Operator	$64.98	**15J**	**11P**	**8Y**
Laborers	Concrete Form Stripper	$63.87	**15J**	**11P**	**8Y**
Laborers	Concrete Placement Crew	$64.98	**15J**	**11P**	**8Y**
Laborers	Concrete Saw Operator/Core Driller	$64.98	**15J**	**11P**	**8Y**
Laborers	Crusher Feeder	$54.65	**15J**	**11P**	**8Y**
Laborers	Curing Laborer	$63.87	**15J**	**11P**	**8Y**
Laborers	Demolition: Wrecking & Moving (Incl. Charred Material)	$63.87	**15J**	**11P**	**8Y**
Laborers	Ditch Digger	$63.87	**15J**	**11P**	**8Y**
Laborers	Diver	$65.75	**15J**	**11P**	**8Y**
Laborers	Drill Operator (Hydraulic, Diamond)	$64.98	**15J**	**11P**	**8Y**
Laborers	Dry Stack Walls	$63.87	**15J**	**11P**	**8Y**
Laborers	Dump Person	$63.87	**15J**	**11P**	**8Y**

Provided to Builders Exchange of WA, Inc. For usage Conditions Agreement see www.bxwa.com - Always Verify Scal

Laborers	Epoxy Technician	$63.87	**15J**	**11P**	**8Y**
Laborers	Erosion Control Worker	$63.87	**15J**	**11P**	**8Y**
Laborers	Faller & Bucker Chain Saw	$64.98	**15J**	**11P**	**8Y**
Laborers	Fine Graders	$63.87	**15J**	**11P**	**8Y**
Laborers	Firewatch	$54.65	**15J**	**11P**	**8Y**
Laborers	Form Setter	$64.98	**15J**	**11P**	**8Y**
Laborers	Gabian Basket Builders	$63.87	**15J**	**11P**	**8Y**
Laborers	General Laborer	$63.87	**15J**	**11P**	**8Y**
Laborers	Grade Checker & Transit Person	$67.38	**15J**	**11P**	**8Y**
Laborers	Grinders	$63.87	**15J**	**11P**	**8Y**
Laborers	Grout Machine Tender	$63.87	**15J**	**11P**	**8Y**
Laborers	Groutmen (Pressure) Including Post Tension Beams	$64.98	**15J**	**11P**	**8Y**
Laborers	Guardrail Erector	$63.87	**15J**	**11P**	**8Y**
Laborers	Hazardous Waste Worker (Level A)	$65.75	**15J**	**11P**	**8Y**
Laborers	Hazardous Waste Worker (Level B)	$64.98	**15J**	**11P**	**8Y**

Provided to Builders Exchange of WA, Inc. For usage Conditions Agreement see www.bxwa.com - Always Verify Scal

Laborers	Hazardous Waste Worker (Level C)	$63.87	**15J**	**11P**	**8Y**
Laborers	High Scaler	$65.75	**15J**	**11P**	**8Y**
Laborers	Jackhammer	$64.98	**15J**	**11P**	**8Y**
Laborers	Laserbeam Operator	$64.98	**15J**	**11P**	**8Y**
Laborers	Maintenance Person	$63.87	**15J**	**11P**	**8Y**
Laborers	Manhole Builder-Mudman	$64.98	**15J**	**11P**	**8Y**
Laborers	Material Yard Person	$63.87	**15J**	**11P**	**8Y**
Laborers	Mold Abatement Worker	$63.87	**15J**	**11P**	**8Y**
Laborers	Motorman-Dinky Locomotive	$67.48	**15J**	**11P**	**8Y**
Laborers	nozzleman (concrete pump, green cutter when using combination of high pressure air & water on concrete & rock, sandblast, gunite, shotcrete, water blaster, vacuum blaster)	$67.38	**15J**	**11P**	**8Y**
Laborers	Pavement Breaker	$64.98	**15J**	**11P**	**8Y**
Laborers	Pilot Car	$54.65	**15J**	**11P**	**8Y**
Laborers	Pipe Layer (Lead)	$67.38	**15J**	**11P**	**8Y**

Provided to Builders Exchange of WA, Inc. For usage Conditions Agreement see www.bxwa.com - Always Verify Scal

Laborers	Pipe Layer/Tailor	$64.98	**15J**	**11P**	**8Y**
Laborers	Pipe Pot Tender	$64.98	**15J**	**11P**	**8Y**
Laborers	Pipe Reliner	$64.98	**15J**	**11P**	**8Y**
Laborers	Pipe Wrapper	$64.98	**15J**	**11P**	**8Y**
Laborers	Pot Tender	$63.87	**15J**	**11P**	**8Y**
Laborers	Powderman	$65.75	**15J**	**11P**	**8Y**
Laborers	Powderman's Helper	$63.87	**15J**	**11P**	**8Y**
Laborers	Power Jacks	$64.98	**15J**	**11P**	**8Y**
Laborers	Power Washer	$63.87	**15J**	**11P**	**8Y**
Laborers	Railroad Spike Puller - Power	$64.98	**15J**	**11P**	**8Y**
Laborers	Raker - Asphalt	$67.38	**15J**	**11P**	**8Y**
Laborers	Re-timberman	$65.75	**15J**	**11P**	**8Y**
Laborers	Remote Equipment Operator	$64.98	**15J**	**11P**	**8Y**
Laborers	Rigger/Signal Person	$64.98	**15J**	**11P**	**8Y**
Laborers	Rip Rap Person	$63.87	**15J**	**11P**	**8Y**
Laborers	Rivet Buster	$64.98	**15J**	**11P**	**8Y**

Provided to Builders Exchange of WA, Inc. For usage Conditions Agreement see www.bxwa.com - Always Verify Scal

Laborers	Rodder	$64.98	**15J**	**11P**	**8Y**
Laborers	Scaffold Erector	$63.87	**15J**	**11P**	**8Y**
Laborers	Scale Person	$63.87	**15J**	**11P**	**8Y**
Laborers	Sloper (Over 20")	$64.98	**15J**	**11P**	**8Y**
Laborers	Sloper Sprayer	$63.87	**15J**	**11P**	**8Y**
Laborers	Spreader (Concrete)	$64.98	**15J**	**11P**	**8Y**
Laborers	Stake Hopper	$63.87	**15J**	**11P**	**8Y**
Laborers	Stock Piler	$63.87	**15J**	**11P**	**8Y**
Laborers	Swinging Stage/Boatswain Chair	$54.65	**15J**	**11P**	**8Y**
Laborers	Tamper & Similar Electric, Air & Gas Operated Tools	$64.98	**15J**	**11P**	**8Y**
Laborers	Tamper (Multiple & Self-propelled)	$64.98	**15J**	**11P**	**8Y**
Laborers	Timber Person - Sewer (Lagger, Shorer & Cribber)	$64.98	**15J**	**11P**	**8Y**
Laborers	Toolroom Person (at Jobsite)	$63.87	**15J**	**11P**	**8Y**
Laborers	Topper	$63.87	**15J**	**11P**	**8Y**
Laborers	Track Laborer	$63.87	**15J**	**11P**	**8Y**

Provided to Builders Exchange of WA, Inc. For usage Conditions Agreement see www.bxwa.com - Always Verify Scal

Laborers	Track Liner (Power)	$64.98	**15J**	**11P**	**8Y**
Laborers	Traffic Control Laborer	$58.20	**15J**	**11P**	**9C**
Laborers	Traffic Control Supervisor	$61.47	**15J**	**11P**	**9C**
Laborers	Truck Spotter	$63.87	**15J**	**11P**	**8Y**
Laborers	Tugger Operator	$64.98	**15J**	**11P**	**8Y**
Laborers	Tunnel Work-Compressed Air Worker 0-30 psi	$200.40	**15J**	**11P**	**9B**
Laborers	Tunnel Work-Compressed Air Worker 30.01-44.00 psi	$205.43	**15J**	**11P**	**9B**
Laborers	Tunnel Work-Compressed Air Worker 44.01-54.00 psi	$209.11	**15J**	**11P**	**9B**
Laborers	Tunnel Work-Compressed Air Worker 54.01-60.00 psi	$214.81	**15J**	**11P**	**9B**
Laborers	Tunnel Work-Compressed Air Worker 60.01-64.00 psi	$216.93	**15J**	**11P**	**9B**
Laborers	Tunnel Work-Compressed Air Worker 64.01-68.00 psi	$222.03	**15J**	**11P**	**9B**
Laborers	Tunnel Work-Compressed Air Worker 68.01-70.00	$223.93	**15J**	**11P**	**9B**

Provided to Builders Exchange of WA, Inc. For usage Conditions Agreement see www.bxwa.com - Always Verify Scal

	psi				
Laborers	Tunnel Work-Compressed Air Worker 70.01-72.00 psi	$225.93	**15J**	**11P**	**9B**
Laborers	Tunnel Work-Compressed Air Worker 72.01-74.00 psi	$227.93	**15J**	**11P**	**9B**
Laborers	Tunnel Work-Guage and Lock Tender	$67.48	**15J**	**11P**	**8Y**
Laborers	Tunnel Work-Miner	$67.48	**15J**	**11P**	**8Y**
Laborers	Vibrator	$64.98	**15J**	**11P**	**8Y**
Laborers	Vinyl Seamer	$63.87	**15J**	**11P**	**8Y**
Laborers	Watchman	$49.97	**15J**	**11P**	**8Y**
Laborers	Welder	$64.98	**15J**	**11P**	**8Y**
Laborers	Well Point Laborer	$64.98	**15J**	**11P**	**8Y**
Laborers	Window Washer/Cleaner	$49.97	**15J**	**11P**	**8Y**
Laborers - Underground Sewer & Water	General Laborer & Topman	$63.87	**15J**	**11P**	**8Y**
Laborers - Underground Sewer & Water	Pipe Layer	$64.98	**15J**	**11P**	**8Y**
Landscape Construction	Landscape Construction/Landscaping Or Planting Laborers	$49.97	**15J**	**11P**	**8Y**

Provided to Builders Exchange of WA, Inc. For usage Conditions Agreement see www.bxwa.com - Always Verify Scal

Landscape Construction	Landscape Operator	$87.54	**15J**	**11G**	**8X**
Landscape Maintenance	Groundskeeper	$16.66		**1**	
Lathers	Journey Level	$78.76	**15O**	**11S**	
Marble Setters	Journey Level	$71.82	**7E**	**1N**	
Metal Fabrication (In Shop)	Journey Level	$37.56	**0**	**11D**	
Millwright	Journey Level	$80.28	**15J**	**4C**	
Modular Buildings	Journey Level	$16.66		**1**	
Painters	Journey Level	$54.71	**6Z**	**11J**	
Pile Driver	Crew Tender	$86.81	**15J**	**11U**	**9L**
Pile Driver	Journey Level	$80.50	**15J**	**11U**	**9L**
Plasterers	Journey Level	$73.54	**7Q**	**1R**	
Plasterers	Nozzleman	$77.54	**7Q**	**1R**	
Playground & Park Equipment Installers	Journey Level	$16.66		**1**	
Plumbers & Pipefitters	Journey Level	$90.87	**5A**	**1G**	
Power Equipment Operators	Asphalt Plant Operators	$89.02	**15J**	**11G**	**8X**
Power Equipment Operators	Assistant Engineer	$83.69	**15J**	**11G**	**8X**

Provided to Builders Exchange of WA, Inc. For usage Conditions Agreement see www.bxwa.com - Always Verify Scal

Power Equipment Operators	Barrier Machine (zipper)	$88.22	**15J**	**11G**	**8X**
Power Equipment Operators	Batch Plant Operator: concrete	$88.22	**15J**	**11G**	**8X**
Power Equipment Operators	Boat Operator	$87.82	**7A**	**11H**	**8X**
Power Equipment Operators	Bobcat	$83.69	**15J**	**11G**	**8X**
Power Equipment Operators	Brokk - Remote Demolition Equipment	$83.69	**15J**	**11G**	**8X**
Power Equipment Operators	Brooms	$83.69	**15J**	**11G**	**8X**
Power Equipment Operators	Bump Cutter	$88.22	**15J**	**11G**	**8X**
Power Equipment Operators	Cableways	$89.02	**15J**	**11G**	**8X**
Power Equipment Operators	Chipper	$88.22	**15J**	**11G**	**8X**
Power Equipment Operators	Compressor	$83.69	**15J**	**11G**	**8X**
Power Equipment Operators	Concrete Finish Machine - Laser Screed	$83.69	**15J**	**11G**	**8X**
Power Equipment Operators	Concrete Pump - Mounted Or Trailer High Pressure Line Pump, Pump High Pressure	$87.54	**15J**	**11G**	**8X**

Provided to Builders Exchange of WA, Inc. For usage Conditions Agreement see www.bxwa.com - Always Verify Scal

Power Equipment Operators	Concrete Pump: Truck Mount With Boom Attachment Over 42 M	$89.02	**15J**	**11G**	**8X**
Power Equipment Operators	Concrete Pump: Truck Mount With Boom Attachment Up To 42m	$88.22	**15J**	**11G**	**8X**
Power Equipment Operators	Conveyors	$87.54	**15J**	**11G**	**8X**
Power Equipment Operators	Cranes Friction: 200 tons and over	$90.46	**7A**	**11H**	**8X**
Power Equipment Operators	Cranes, A-frame: 10 tons and under	$82.59	**7A**	**11H**	**8X**
Power Equipment Operators	Cranes: 100 tons through 199 tons, or 150' of boom (including jib with attachments)	$88.67	**7A**	**11H**	**8X**
Power Equipment Operators	Cranes: 20 tons through 44 tons with attachments	$87.03	**7A**	**11H**	**8X**
Power Equipment Operators	Cranes: 200 tons- 299 tons, or 250' of boom including jib with attachments	$89.60	**7A**	**11H**	**8X**
Power Equipment Operators	Cranes: 300 tons and over or 300' of boom including jib with attachments	$90.46	**7A**	**11H**	**8X**
Power Equipment Operators	Cranes: 45 tons through 99 tons, under 150' of	$87.82	**7A**	**11H**	**8X**

Provided to Builders Exchange of WA, Inc. For usage Conditions Agreement see www.bxwa.com - Always Verify Scal

	boom(including jib with attachments)				
Power Equipment Operators	Cranes: Friction cranes through 199 tons	$89.60	**7A**	**11H**	**8X**
Power Equipment Operators	Cranes: through 19 tons with attachments, a-frame over 10 tons	$86.36	**7A**	**11H**	**8X**
Power Equipment Operators	Crusher	$88.22	**15J**	**11G**	**8X**
Power Equipment Operators	Deck Engineer/Deck Winches (power)	$88.22	**15J**	**11G**	**8X**
Power Equipment Operators	Derricks, On Building Work	$87.82	**7A**	**11H**	**8X**
Power Equipment Operators	Dozers D-9 & Under	$87.54	**15J**	**11G**	**8X**
Power Equipment Operators	Drill Oilers: Auger Type, Truck Or Crane Mount	$87.54	**15J**	**11G**	**8X**
Power Equipment Operators	Drilling Machine	$89.91	**15J**	**11G**	**8X**
Power Equipment Operators	Elevator and man-lift: permanent and shaft type	$83.69	**15J**	**11G**	**8X**
Power Equipment Operators	Finishing Machine, Bidwell And Gamaco & Similar Equipment	$88.22	**15J**	**11G**	**8X**
Power Equipment Operators	Forklift: 3000 lbs and over with attachments	$87.54	**15J**	**11G**	**8X**

Provided to Builders Exchange of WA, Inc. For usage Conditions Agreement see www.bxwa.com - Always Verify Scal

Power Equipment Operators	Forklifts: under 3000 lbs. with attachments	$83.69	**15J**	**11G**	**8X**
Power Equipment Operators	Grade Engineer: Using Blue Prints, Cut Sheets, Etc	$88.22	**15J**	**11G**	**8X**
Power Equipment Operators	Gradechecker/Stakeman	$83.69	**15J**	**11G**	**8X**
Power Equipment Operators	Guardrail Punch	$88.22	**15J**	**11G**	**8X**
Power Equipment Operators	Hard Tail End Dump Articulating Off- Road Equipment 45 Yards. & Over	$89.02	**15J**	**11G**	**8X**
Power Equipment Operators	Hard Tail End Dump Articulating Off-road Equipment Under 45 Yards	$88.22	**15J**	**11G**	**8X**
Power Equipment Operators	Horizontal/Directional Drill Locator	$87.54	**15J**	**11G**	**8X**
Power Equipment Operators	Horizontal/Directional Drill Operator	$88.22	**15J**	**11G**	**8X**
Power Equipment Operators	Hydralifts/Boom Trucks Over 10 Tons	$86.36	**7A**	**11H**	**8X**
Power Equipment Operators	Hydralifts/boom trucks: 10 tons and under	$82.59	**7A**	**11H**	**8X**

Provided to Builders Exchange of WA, Inc. For usage Conditions Agreement see www.bxwa.com - Always Verify Scal

Power Equipment Operators	Leverman	$90.84	**15J**	**11G**	**8X**
Power Equipment Operators	Loader, Overhead, 6 Yards. But Not Including 8 Yards	$89.02	**15J**	**11G**	**8X**
Power Equipment Operators	Loaders, Overhead Under 6 Yards	$88.22	**15J**	**11G**	**8X**
Power Equipment Operators	Loaders, Plant Feed	$88.22	**15J**	**11G**	**8X**
Power Equipment Operators	Loaders: Elevating Type Belt	$87.54	**15J**	**11G**	**8X**
Power Equipment Operators	Locomotives, All	$88.22	**15J**	**11G**	**8X**
Power Equipment Operators	Material Transfer Device	$88.22	**15J**	**11G**	**8X**
Power Equipment Operators	Mechanics: All (Leadmen - $0.50 per hour over mechanic)	$89.91	**15J**	**11G**	**8X**
Power Equipment Operators	Motor Patrol Graders	$89.02	**15J**	**11G**	**8X**
Power Equipment Operators	Mucking Machine, Mole, Tunnel Drill, Boring, Road Header And/or Shield	$89.02	**15J**	**11G**	**8X**
Power Equipment Operators	Oil Distributors, Blower Distribution & Mulch Seeding Operator	$83.69	**15J**	**11G**	**8X**

Provided to Builders Exchange of WA, Inc. For usage Conditions Agreement see www.bxwa.com - Always Verify Scal

Power Equipment Operators	Outside Hoists (Elevators and Manlifts), Air Tuggers, Strato	$87.54	**15J**	**11G**	**8X**
Power Equipment Operators	Overhead, bridge type Crane: 20 tons through 44 tons	$87.03	**7A**	**11H**	**8X**
Power Equipment Operators	Overhead, bridge type: 100 tons and over	$88.67	**7A**	**11H**	**8X**
Power Equipment Operators	Overhead, bridge type: 45 tons through 99 tons	$87.82	**7A**	**11H**	**8X**
Power Equipment Operators	Pavement Breaker	$83.69	**15J**	**11G**	**8X**
Power Equipment Operators	Pile Driver (other Than Crane Mount)	$88.22	**15J**	**11G**	**8X**
Power Equipment Operators	Plant Oiler - Asphalt, Crusher	$87.54	**15J**	**11G**	**8X**
Power Equipment Operators	Posthole Digger, Mechanical	$83.69	**15J**	**11G**	**8X**
Power Equipment Operators	Power Plant	$83.69	**15J**	**11G**	**8X**
Power Equipment Operators	Pumps - Water	$83.69	**15J**	**11G**	**8X**
Power Equipment Operators	Quad 9, Hd 41, D10 And Over	$89.02	**15J**	**11G**	**8X**
Power Equipment Operators	Quick Tower: no cab, under 100 feet in height	$88.22	**15J**	**11G**	**8X**

Provided to Builders Exchange of WA, Inc. For usage Conditions Agreement see www.bxwa.com - Always Verify Scal

	base to boom				
Power Equipment Operators	Remote Control Operator On Rubber Tired Earth Moving Equipment	$89.02	**15J**	**11G**	**8X**
Power Equipment Operators	Rigger and Bellman	$82.59	**7A**	**11H**	**8X**
Power Equipment Operators	Rigger/Signal Person, Bellman(Certified)	$86.36	**7A**	**11H**	**8X**
Power Equipment Operators	Rollagon	$89.02	**15J**	**11G**	**8X**
Power Equipment Operators	Roller, Other Than Plant Mix	$83.69	**15J**	**11G**	**8X**
Power Equipment Operators	Roller, Plant Mix Or Multi-lift Materials	$87.54	**15J**	**11G**	**8X**
Power Equipment Operators	Roto-mill, Roto-grinder	$88.22	**15J**	**11G**	**8X**
Power Equipment Operators	Saws - Concrete	$87.54	**15J**	**11G**	**8X**
Power Equipment Operators	Scraper, Self Propelled Under 45 Yards	$88.22	**15J**	**11G**	**8X**
Power Equipment Operators	Scrapers - Concrete & Carry All	$87.54	**15J**	**11G**	**8X**
Power Equipment Operators	Scrapers, Self-propelled: 45 Yards And Over	$89.02	**15J**	**11G**	**8X**
Power Equipment Operators	Service Engineers: Equipment	$87.54	**15J**	**11G**	**8X**

Provided to Builders Exchange of WA, Inc. For usage Conditions Agreement see www.bxwa.com - Always Verify Scal

Power Equipment Operators	Shotcrete/Gunite Equipment	$83.69	**15J**	**11G**	**8X**
Power Equipment Operators	Shovel, Excavator, Backhoe, Tractors Under 15 Metric Tons	$87.54	**15J**	**11G**	**8X**
Power Equipment Operators	Shovel, Excavator, Backhoe: Over 30 Metric Tons To 50 Metric Tons	$89.02	**15J**	**11G**	**8X**
Power Equipment Operators	Shovel, Excavator, Backhoes, Tractors: 15 To 30 Metric Tons	$88.22	**15J**	**11G**	**8X**
Power Equipment Operators	Shovel, Excavator, Backhoes: Over 50 Metric Tons To 90 Metric Tons	$89.91	**15J**	**11G**	**8X**
Power Equipment Operators	Shovel, Excavator, Backhoes: Over 90 Metric Tons	$90.84	**15J**	**11G**	**8X**
Power Equipment Operators	Slipform Pavers	$89.02	**15J**	**11G**	**8X**
Power Equipment Operators	Spreader, Topsider & Screedman	$89.02	**15J**	**11G**	**8X**
Power Equipment Operators	Subgrader Trimmer	$88.22	**15J**	**11G**	**8X**
Power Equipment Operators	Tower Bucket Elevators	$87.54	**15J**	**11G**	**8X**

Provided to Builders Exchange of WA, Inc. For usage Conditions Agreement see www.bxwa.com - Always Verify Scal

Power Equipment Operators	Tower Crane: over 175' through 250' in height, base to boom	$89.60	**7A**	**11H**	**8X**
Power Equipment Operators	Tower crane: up to 175' in height base to boom	$88.67	**7A**	**11H**	**8X**
Power Equipment Operators	Tower Cranes: over 250' in height from base to boom	$90.46	**7A**	**11H**	**8X**
Power Equipment Operators	Transporters, All Track Or Truck Type	$89.02	**15J**	**11G**	**8X**
Power Equipment Operators	Trenching Machines	$87.54	**15J**	**11G**	**8X**
Power Equipment Operators	Truck Crane Oiler/Driver: 100 tons and over	$87.03	**7A**	**11H**	**8X**
Power Equipment Operators	Truck crane oiler/driver: under 100 tons	$86.36	**7A**	**11H**	**8X**
Power Equipment Operators	Truck Mount Portable Conveyor	$88.22	**15J**	**11G**	**8X**
Power Equipment Operators	Vac Truck (Vactor Guzzler, Hydro Excavator)	$88.22	**15J**	**11G**	**8X**
Power Equipment Operators	Welder	$89.02	**15J**	**11G**	**8X**
Power Equipment Operators	Wheel Tractors, Farmall Type	$83.69	**15J**	**11G**	**8X**
Power Equipment Operators	Yo Yo Pay Dozer	$88.22	**15J**	**11G**	**8X**

Provided to Builders Exchange of WA, Inc. For usage Conditions Agreement see www.bxwa.com - Always Verify Scal

Power Equipment Operators- Underground Sewer & Water	Asphalt Plant Operators	$89.02	**15J**	**11G**	**8X**
Power Equipment Operators- Underground Sewer & Water	Assistant Engineer	$83.69	**15J**	**11G**	**8X**
Power Equipment Operators- Underground Sewer & Water	Barrier Machine (zipper)	$88.22	**15J**	**11G**	**8X**
Power Equipment Operators- Underground Sewer & Water	Batch Plant Operator, Concrete	$88.22	**15J**	**11G**	**8X**
Power Equipment Operators- Underground Sewer & Water	Boat Operator	$87.82	**7A**	**11H**	**8X**
Power Equipment Operators- Underground Sewer & Water	Bobcat	$83.69	**15J**	**11G**	**8X**
Power Equipment Operators- Underground Sewer & Water	Brokk - Remote Demolition Equipment	$83.69	**15J**	**11G**	**8X**
Power Equipment Operators- Underground Sewer & Water	Brooms	$83.69	**15J**	**11G**	**8X**
Power Equipment Operators- Underground Sewer & Water	Bump Cutter	$88.22	**15J**	**11G**	**8X**

Provided to Builders Exchange of WA, Inc. For usage Conditions Agreement see www.bxwa.com - Always Verify Scal

Power Equipment Operators- Underground Sewer & Water	Cableways	$89.02	**15J**	**11G**	**8X**
Power Equipment Operators- Underground Sewer & Water	Chipper	$88.22	**15J**	**11G**	**8X**
Power Equipment Operators- Underground Sewer & Water	Compressor	$83.69	**15J**	**11G**	**8X**
Power Equipment Operators- Underground Sewer & Water	Concrete Finish Machine - Laser Screed	$83.69	**15J**	**11G**	**8X**
Power Equipment Operators- Underground Sewer & Water	Concrete Pump - Mounted Or Trailer High Pressure Line Pump, Pump High Pressure	$87.54	**15J**	**11G**	**8X**
Power Equipment Operators- Underground Sewer & Water	Concrete Pump: Truck Mount With Boom Attachment Over 42 M	$89.02	**15J**	**11G**	**8X**
Power Equipment Operators- Underground Sewer & Water	Concrete Pump: Truck Mount With Boom Attachment Up To 42m	$88.22	**15J**	**11G**	**8X**
Power Equipment Operators- Underground Sewer & Water	Conveyors	$87.54	**15J**	**11G**	**8X**

Provided to Builders Exchange of WA, Inc. For usage Conditions Agreement see www.bxwa.com - Always Verify Scal

Power Equipment Operators- Underground Sewer & Water	Cranes Friction: 200 tons and over	$90.46	**7A**	**11H**	**8X**
Power Equipment Operators- Underground Sewer & Water	Cranes, A-frame: 10 tons and under	$82.59	**7A**	**11H**	**8X**
Power Equipment Operators- Underground Sewer & Water	Cranes: 100 tons through 199 tons, or 150' of boom (including jib with attachments)	$88.67	**7A**	**11H**	**8X**
Power Equipment Operators- Underground Sewer & Water	Cranes: 20 tons through 44 tons with attachments	$87.03	**7A**	**11H**	**8X**
Power Equipment Operators- Underground Sewer & Water	Cranes: 200 tons- 299 tons, or 250' of boom including jib with attachments	$89.60	**7A**	**11H**	**8X**
Power Equipment Operators- Underground Sewer & Water	Cranes: 300 tons and over or 300' of boom including jib with attachments	$90.46	**7A**	**11H**	**8X**
Power Equipment Operators- Underground Sewer & Water	Cranes: 45 tons through 99 tons, under 150' of boom(including jib with attachments)	$87.82	**7A**	**11H**	**8X**
Power Equipment Operators- Underground Sewer & Water	Cranes: Friction cranes through 199 tons	$89.60	**7A**	**11H**	**8X**

Provided to Builders Exchange of WA, Inc. For usage Conditions Agreement see www.bxwa.com - Always Verify Scal

Power Equipment Operators- Underground Sewer & Water	Cranes: through 19 tons with attachments, a-frame over 10 tons	$86.36	**7A**	**11H**	**8X**
Power Equipment Operators- Underground Sewer & Water	Crusher	$88.22	**15J**	**11G**	**8X**
Power Equipment Operators- Underground Sewer & Water	Deck Engineer/Deck Winches (power)	$88.22	**15J**	**11G**	**8X**
Power Equipment Operators- Underground Sewer & Water	Derricks, On Building Work	$87.82	**7A**	**11H**	**8X**
Power Equipment Operators- Underground Sewer & Water	Dozers D-9 & Under	$87.54	**15J**	**11G**	**8X**
Power Equipment Operators- Underground Sewer & Water	Drill Oilers: Auger Type, Truck Or Crane Mount	$87.54	**15J**	**11G**	**8X**
Power Equipment Operators- Underground Sewer & Water	Drilling Machine	$89.91	**15J**	**11G**	**8X**
Power Equipment Operators- Underground Sewer & Water	Elevator and man-lift: permanent and shaft type	$83.69	**15J**	**11G**	**8X**
Power Equipment Operators- Underground Sewer & Water	Finishing Machine, Bidwell And Gamaco & Similar Equipment	$88.22	**15J**	**11G**	**8X**

Provided to Builders Exchange of WA, Inc. For usage Conditions Agreement see www.bxwa.com - Always Verify Scal

Power Equipment Operators- Underground Sewer & Water	Forklift: 3000 lbs and over with attachments	$87.54	**15J**	**11G**	**8X**
Power Equipment Operators- Underground Sewer & Water	Forklifts: under 3000 lbs. with attachments	$83.69	**15J**	**11G**	**8X**
Power Equipment Operators- Underground Sewer & Water	Grade Engineer: Using Blue Prints, Cut Sheets, Etc	$88.22	**15J**	**11G**	**8X**
Power Equipment Operators- Underground Sewer & Water	Gradechecker/Stakeman	$83.69	**15J**	**11G**	**8X**
Power Equipment Operators- Underground Sewer & Water	Guardrail Punch	$88.22	**15J**	**11G**	**8X**
Power Equipment Operators- Underground Sewer & Water	Hard Tail End Dump Articulating Off- Road Equipment 45 Yards. & Over	$89.02	**15J**	**11G**	**8X**
Power Equipment Operators- Underground Sewer & Water	Hard Tail End Dump Articulating Off-road Equipment Under 45 Yards	$88.22	**15J**	**11G**	**8X**
Power Equipment Operators- Underground Sewer & Water	Horizontal/Directional Drill Locator	$87.54	**15J**	**11G**	**8X**

Provided to Builders Exchange of WA, Inc. For usage Conditions Agreement see www.bxwa.com - Always Verify Scal

Power Equipment Operators- Underground Sewer & Water	Horizontal/Directional Drill Operator	$88.22	**15J**	**11G**	**8X**
Power Equipment Operators- Underground Sewer & Water	Hydralifts/boom trucks: 10 tons and under	$82.59	**7A**	**11H**	**8X**
Power Equipment Operators- Underground Sewer & Water	Hydralifts/boom trucks: over 10 tons	$86.36	**7A**	**11H**	**8X**
Power Equipment Operators- Underground Sewer & Water	Leverman	$90.84	**15J**	**11G**	**8X**
Power Equipment Operators- Underground Sewer & Water	Loader, Overhead, 6 Yards. But Not Including 8 Yards	$89.02	**15J**	**11G**	**8X**
Power Equipment Operators- Underground Sewer & Water	Loaders, Overhead Under 6 Yards	$88.22	**15J**	**11G**	**8X**
Power Equipment Operators- Underground Sewer & Water	Loaders, Plant Feed	$88.22	**15J**	**11G**	**8X**
Power Equipment Operators- Underground Sewer & Water	Loaders: Elevating Type Belt	$87.54	**15J**	**11G**	**8X**
Power Equipment Operators- Underground Sewer & Water	Locomotives, All	$88.22	**15J**	**11G**	**8X**

Provided to Builders Exchange of WA, Inc. For usage Conditions Agreement see www.bxwa.com - Always Verify Scal

Power Equipment Operators- Underground Sewer & Water	Material Transfer Device	$88.22	**15J**	**11G**	**8X**
Power Equipment Operators- Underground Sewer & Water	Mechanics: All (Leadmen - $0.50 per hour over mechanic)	$89.91	**15J**	**11G**	**8X**
Power Equipment Operators- Underground Sewer & Water	Motor Patrol Graders	$89.02	**15J**	**11G**	**8X**
Power Equipment Operators- Underground Sewer & Water	Mucking Machine, Mole, Tunnel Drill, Boring, Road Header And/or Shield	$89.02	**15J**	**11G**	**8X**
Power Equipment Operators- Underground Sewer & Water	Oil Distributors, Blower Distribution & Mulch Seeding Operator	$83.69	**15J**	**11G**	**8X**
Power Equipment Operators- Underground Sewer & Water	Outside Hoists (Elevators and Manlifts), Air Tuggers, Strato	$87.54	**15J**	**11G**	**8X**
Power Equipment Operators- Underground Sewer & Water	Overhead, bridge type Crane: 20 tons through 44 tons	$87.03	**7A**	**11H**	**8X**
Power Equipment Operators- Underground Sewer & Water	Overhead, bridge type: 100 tons and over	$88.67	**7A**	**11H**	**8X**
Power Equipment Operators- Underground Sewer & Water	Overhead, bridge type: 45 tons through 99 tons	$87.82	**7A**	**11H**	**8X**

Provided to Builders Exchange of WA, Inc. For usage Conditions Agreement see www.bxwa.com - Always Verify Scal

Power Equipment Operators- Underground Sewer & Water	Pavement Breaker	$83.69	**15J**	**11G**	**8X**
Power Equipment Operators- Underground Sewer & Water	Pile Driver (other Than Crane Mount)	$88.22	**15J**	**11G**	**8X**
Power Equipment Operators- Underground Sewer & Water	Plant Oiler - Asphalt, Crusher	$87.54	**15J**	**11G**	**8X**
Power Equipment Operators- Underground Sewer & Water	Posthole Digger, Mechanical	$83.69	**15J**	**11G**	**8X**
Power Equipment Operators- Underground Sewer & Water	Power Plant	$83.69	**15J**	**11G**	**8X**
Power Equipment Operators- Underground Sewer & Water	Pumps - Water	$83.69	**15J**	**11G**	**8X**
Power Equipment Operators- Underground Sewer & Water	Quad 9, Hd 41, D10 And Over	$89.02	**15J**	**11G**	**8X**
Power Equipment Operators- Underground Sewer & Water	Quick Tower: no cab, under 100 feet in height base to boom	$88.22	**15J**	**11G**	**8X**
Power Equipment Operators- Underground Sewer & Water	Remote Control Operator On Rubber Tired Earth Moving Equipment	$89.02	**15J**	**11G**	**8X**

Provided to Builders Exchange of WA, Inc. For usage Conditions Agreement see www.bxwa.com - Always Verify Scal

Power Equipment Operators- Underground Sewer & Water	Rigger and Bellman	$82.59	**7A**	**11H**	**8X**
Power Equipment Operators- Underground Sewer & Water	Rigger/Signal Person, Bellman(Certified)	$86.36	**7A**	**11H**	**8X**
Power Equipment Operators- Underground Sewer & Water	Rollagon	$89.02	**15J**	**11G**	**8X**
Power Equipment Operators- Underground Sewer & Water	Roller, Other Than Plant Mix	$83.69	**15J**	**11G**	**8X**
Power Equipment Operators- Underground Sewer & Water	Roller, Plant Mix Or Multi-lift Materials	$87.54	**15J**	**11G**	**8X**
Power Equipment Operators- Underground Sewer & Water	Roto-mill, Roto-grinder	$88.22	**15J**	**11G**	**8X**
Power Equipment Operators- Underground Sewer & Water	Saws - Concrete	$87.54	**15J**	**11G**	**8X**
Power Equipment Operators- Underground Sewer & Water	Scraper, Self Propelled Under 45 Yards	$88.22	**15J**	**11G**	**8X**
Power Equipment Operators- Underground Sewer & Water	Scrapers - Concrete & Carry All	$87.54	**15J**	**11G**	**8X**

Provided to Builders Exchange of WA, Inc. For usage Conditions Agreement see www.bxwa.com - Always Verify Scal

Power Equipment Operators- Underground Sewer & Water	Scrapers, Self-propelled: 45 Yards And Over	$89.02	**15J**	**11G**	**8X**
Power Equipment Operators- Underground Sewer & Water	Shotcrete/Gunite Equipment	$83.69	**15J**	**11G**	**8X**
Power Equipment Operators- Underground Sewer & Water	Shovel, Excavator, Backhoe, Tractors Under 15 Metric Tons	$87.54	**15J**	**11G**	**8X**
Power Equipment Operators- Underground Sewer & Water	Shovel, Excavator, Backhoe: Over 30 Metric Tons To 50 Metric Tons	$89.02	**15J**	**11G**	**8X**
Power Equipment Operators- Underground Sewer & Water	Shovel, Excavator, Backhoes, Tractors: 15 To 30 Metric Tons	$88.22	**15J**	**11G**	**8X**
Power Equipment Operators- Underground Sewer & Water	Shovel, Excavator, Backhoes: Over 50 Metric Tons To 90 Metric Tons	$89.91	**15J**	**11G**	**8X**
Power Equipment Operators- Underground Sewer & Water	Shovel, Excavator, Backhoes: Over 90 Metric Tons	$90.84	**15J**	**11G**	**8X**
Power Equipment Operators- Underground Sewer & Water	Slipform Pavers	$89.02	**15J**	**11G**	**8X**
Power Equipment Operators- Underground Sewer & Water	Spreader, Topsider & Screedman	$89.02	**15J**	**11G**	**8X**

Provided to Builders Exchange of WA, Inc. For usage Conditions Agreement see www.bxwa.com - Always Verify Scal

Power Equipment Operators- Underground Sewer & Water	Subgrader Trimmer	$88.22	**15J**	**11G**	**8X**
Power Equipment Operators- Underground Sewer & Water	Tower Bucket Elevators	$87.54	**15J**	**11G**	**8X**
Power Equipment Operators- Underground Sewer & Water	Tower Crane: over 175' through 250' in height, base to boom	$89.60	**7A**	**11H**	**8X**
Power Equipment Operators- Underground Sewer & Water	Tower crane: up to 175' in height base to boom	$88.67	**7A**	**11H**	**8X**
Power Equipment Operators- Underground Sewer & Water	Tower Cranes: over 250' in height from base to boom	$90.46	**7A**	**11H**	**8X**
Power Equipment Operators- Underground Sewer & Water	Transporters, All Track Or Truck Type	$89.02	**15J**	**11G**	**8X**
Power Equipment Operators- Underground Sewer & Water	Trenching Machines	$87.54	**15J**	**11G**	**8X**
Power Equipment Operators- Underground Sewer & Water	Truck Crane Oiler/Driver: 100 tons and over	$87.03	**7A**	**11H**	**8X**
Power Equipment Operators- Underground Sewer & Water	Truck crane oiler/driver: under 100 tons	$86.36	**7A**	**11H**	**8X**

Provided to Builders Exchange of WA, Inc. For usage Conditions Agreement see www.bxwa.com - Always Verify Scal

Power Equipment Operators- Underground Sewer & Water	Truck Mount Portable Conveyor	$88.22	**15J**	**11G**	**8X**
Power Equipment Operators- Underground Sewer & Water	Vac Truck (Vactor Guzzler, Hydro Excavator)	$88.22	**15J**	**11G**	**8X**
Power Equipment Operators- Underground Sewer & Water	Welder	$89.02	**15J**	**11G**	**8X**
Power Equipment Operators- Underground Sewer & Water	Wheel Tractors, Farmall Type	$83.69	**15J**	**11G**	**8X**
Power Equipment Operators- Underground Sewer & Water	Yo Yo Pay Dozer	$88.22	**15J**	**11G**	**8X**
Power Line Clearance Tree Trimmers	Journey Level In Charge	$64.20	**5A**	**4A**	
Power Line Clearance Tree Trimmers	Spray Person	$60.74	**5A**	**4A**	
Power Line Clearance Tree Trimmers	Tree Equipment Operator	$64.20	**5A**	**4A**	
Power Line Clearance Tree Trimmers	Tree Trimmer	$57.29	**5A**	**4A**	
Power Line Clearance Tree Trimmers	Tree Trimmer Groundperson	$43.05	**5A**	**4A**	

Provided to Builders Exchange of WA, Inc. For usage Conditions Agreement see www.bxwa.com - Always Verify Scal

Refrigeration & Air Conditioning Mechanics	Journey Level	$95.46	**5A**	**1G**
Residential Brick Mason	Journey Level	$22.73		**1**
Residential Carpenters	Journey Level	$78.96	**15J**	**4C**
Residential Cement Masons	Journey Level	$76.78	**15J**	**4U**
Residential Drywall Applicators	Journey Level	$51.52	**15J**	**4C**
Residential Drywall Tapers	Journey Level	$77.66	**5P**	**1E**
Residential Electricians	Journey Level	$48.80		**1**
Residential Glaziers	Journey Level	$27.66		**1**
Residential Insulation Applicators	Journey Level	$27.61		**1**
Residential Laborers	Journey Level	$28.78		**1**
Residential Marble Setters	Journey Level	$39.71		**1**
Residential Painters	Journey Level	$30.44		**1**
Residential Plumbers & Pipefitters	Journey Level	$51.38		**1**
Residential Refrigeration & Air Conditioning Mechanics	Journey Level	$102.92	**7F**	**1E**
Residential Sheet Metal Workers	Journey Level	$102.92	**7F**	**1E**

Provided to Builders Exchange of WA, Inc. For usage Conditions Agreement see www.bxwa.com - Always Verify Scal

Residential Soft Floor Layers	Journey Level	$59.52	**7C**	**3J**
Residential Sprinkler Fitters (Fire Protection)	Journey Level	$61.85		**1**
Residential Stone Masons	Journey Level	$39.71		**1**
Residential Terrazzo Workers	Journey Level	$16.66		**1**
Residential Terrazzo/Tile Finishers	Journey Level	$27.90		**1**
Residential Tile Setters	Journey Level	$21.38		**1**
Roofers	Journey Level	$67.45	**5A**	**3H**
Roofers	Using Irritable Bituminous Materials	$70.45	**5A**	**3H**
Sheet Metal Workers	Journey Level (Field or Shop)	$102.92	**7F**	**1E**
Shipbuilding & Ship Repair	New Construction Boilermaker	$58.93	**7X**	**4J**
Shipbuilding & Ship Repair	New Construction Carpenter	$51.85	**7X**	**4J**
Shipbuilding & Ship Repair	New Construction Crane Operator	$43.00	**7V**	**1**
Shipbuilding & Ship Repair	New Construction Electrician	$58.98	**7X**	**4J**

Provided to Builders Exchange of WA, Inc. For usage Conditions Agreement see www.bxwa.com - Always Verify Scal

Shipbuilding & Ship Repair	New Construction Heat & Frost Insulator	$91.81	**15H**	**11C**
Shipbuilding & Ship Repair	New Construction Laborer	$58.60	**7X**	**4J**
Shipbuilding & Ship Repair	New Construction Machinist	$58.79	**7X**	**4J**
Shipbuilding & Ship Repair	New Construction Operating Engineer	$43.00	**7V**	**1**
Shipbuilding & Ship Repair	New Construction Painter	$58.72	**7X**	**4J**
Shipbuilding & Ship Repair	New Construction Pipefitter	$59.07	**7X**	**4J**
Shipbuilding & Ship Repair	New Construction Rigger	$58.93	**7X**	**4J**
Shipbuilding & Ship Repair	New Construction Sheet Metal	$58.68	**7X**	**4J**
Shipbuilding & Ship Repair	New Construction Shipwright	$51.85	**7X**	**4J**
Shipbuilding & Ship Repair	New Construction Warehouse/Teamster	$43.00	**7V**	**1**
Shipbuilding & Ship Repair	New Construction Welder / Burner	$58.93	**7X**	**4J**
Shipbuilding & Ship Repair	Ship Repair Boilermaker	$58.93	**7X**	**4J**
Shipbuilding & Ship Repair	Ship Repair Carpenter	$51.85	**7X**	**4J**
Shipbuilding & Ship Repair	Ship Repair Crane Operator	$45.06	**7Y**	**4K**

Provided to Builders Exchange of WA, Inc. For usage Conditions Agreement see www.bxwa.com - Always Verify Scal

Shipbuilding & Ship Repair	Ship Repair Electrician	$58.98	**7X**	**4J**
Shipbuilding & Ship Repair	Ship Repair Heat & Frost Insulator	$91.81	**15H**	**11C**
Shipbuilding & Ship Repair	Ship Repair Laborer	$58.60	**7X**	**4J**
Shipbuilding & Ship Repair	Ship Repair Machinist	$58.79	**7X**	**4J**
Shipbuilding & Ship Repair	Ship Repair Operating Engineer	$45.06	**7Y**	**4K**
Shipbuilding & Ship Repair	Ship Repair Painter	$58.72	**7X**	**4J**
Shipbuilding & Ship Repair	Ship Repair Pipefitter	$59.07	**7X**	**4J**
Shipbuilding & Ship Repair	Ship Repair Rigger	$58.93	**7X**	**4J**
Shipbuilding & Ship Repair	Ship Repair Sheet Metal	$58.68	**7X**	**4J**
Shipbuilding & Ship Repair	Ship Repair Shipwright	$51.85	**7X**	**4J**
Shipbuilding & Ship Repair	Ship Repair Warehouse / Teamster	$45.06	**7Y**	**4K**
Sign Makers & Installers (Electrical)	Sign Installer	$26.56		**1**
Sign Makers & Installers (Electrical)	Sign Maker	$20.50		**1**
Sign Makers & Installers (Non-Electrical)	Sign Installer	$22.56		**1**
Sign Makers & Installers (Non-Electrical)	Sign Maker	$20.50		**1**

Provided to Builders Exchange of WA, Inc. For usage Conditions Agreement see www.bxwa.com - Always Verify Scal

Soft Floor Layers	Journey Level	$63.29	**15J**	**4C**	
Solar Controls For Windows	Journey Level	$16.66		**1**	
Sprinkler Fitters (Fire Protection)	Journey Level	$98.99	**5C**	**1X**	
Stage Rigging Mechanics (Non Structural)	Journey Level	$16.66		**1**	
Stone Masons	Journey Level	$71.82	**7E**	**1N**	
Street And Parking Lot Sweeper Workers	Journey Level	$16.66		**1**	
Surveyors	Assistant Construction Site Surveyor	$86.36	**7A**	**11H**	**8X**
Surveyors	Chainman	$82.59	**7A**	**11H**	**8X**
Surveyors	Construction Site Surveyor	$87.82	**7A**	**11H**	**8X**
Surveyors	Drone Operator (when used in conjunction with survey work only)	$82.59	**7A**	**11H**	**8X**
Surveyors	Ground Penetrating Radar Operator	$82.59	**7A**	**11H**	**8X**
Telecommunication Technicians	Telecom Technician Journey Level	$58.51	**5B**	**1B**	
Telephone Line Construction - Outside	Cable Splicer	$41.35	**5A**	**2B**	

Provided to Builders Exchange of WA, Inc. For usage Conditions Agreement see www.bxwa.com - Always Verify Scal

Telephone Line Construction - Outside	Hole Digger/Ground Person	$27.31	**5A**	**2B**
Telephone Line Construction - Outside	Telephone Equipment Operator (Light)	$34.53	**5A**	**2B**
Telephone Line Construction - Outside	Telephone Lineperson	$39.07	**5A**	**2B**
Terrazzo Workers	Journey Level	$67.51	**7E**	**1N**
Tile Setters	Journey Level	$65.51	**7E**	**1N**
Tile, Marble & Terrazzo Finishers	Finisher	$56.34	**7E**	**1N**
Traffic Control Stripers	All cleanup required in connection with traffic control stripers work (Group 1)	$92.44	**15L**	**1K**
Traffic Control Stripers	Handling, painting and installing of all car stops, stop signs and any other type sign (Group 2)	$62.69	**15L**	**1K**
Traffic Control Stripers	Installation of guard rail and posts and similar protective devices (Group 2)	$62.69	**15L**	**1K**
Traffic Control Stripers	Installation of parking gates, ticket spitters and other mechanical and	$62.69	**15L**	**1K**

Provided to Builders Exchange of WA, Inc. For usage Conditions Agreement see www.bxwa.com - Always Verify Scal

	automatic control devices (Group 2)			
Traffic Control Stripers	Installation of plastic metal or composition button, or lines used instead of paint (Group 1)	$92.44	**15L**	**1K**
Traffic Control Stripers	Line removal; chemical sand and hydro-blast, paint and button (Group 1)	$92.44	**15L**	**1K**
Traffic Control Stripers	Manufacturing and installation of all car stops and control devices and similar traffic regulators (Group 2)	$62.69	**15L**	**1K**
Traffic Control Stripers	Manufacturing, painting, stenciling, servicing, repairing, placing and removal of traffic safety and control devices/barricades (Group 2)	$62.69	**15L**	**1K**
Traffic Control Stripers	Painting and installing lines, arrows, bumpers, curbs, etc., on parking lots, air fields, highways, game courts (Group 1)	$92.44	**15L**	**1K**
Traffic Control Stripers	Preparation and maintenance of all surfaces (Group 1)	$92.44	**15L**	**1K**

Provided to Builders Exchange of WA, Inc. For usage Conditions Agreement see www.bxwa.com - Always Verify Scal

Traffic Control Stripers	Seal coating, slurry coating and other surface protection (Group 2)	$62.69	**15L**	**1K**	
Truck Drivers	Asphalt Mix Over 16 Yards	$79.40	**15J**	**11M**	**8L**
Truck Drivers	Asphalt Mix To 16 Yards	$78.56	**15J**	**11M**	**8L**
Truck Drivers	Dump Truck	$78.56	**15J**	**11M**	**8L**
Truck Drivers	Dump Truck & Trailer	$79.40	**15J**	**11M**	**8L**
Truck Drivers	Other Trucks	$79.40	**15J**	**11M**	**8L**
Truck Drivers - Ready Mix	Transit Mix	$79.40	**15J**	**11M**	**8L**
Well Drillers & Irrigation Pump Installers	Irrigation Pump Installer	$17.05		**1**	
Well Drillers & Irrigation Pump Installers	Oiler	$16.66		**1**	
Well Drillers & Irrigation Pump Installers	Well Driller	$19.01		**1**	

Provided to Builders Exchange of WA, Inc. For usage Conditions Agreement see www.bxwa.com - Always Verify Scal

Washington State Department of Labor and Industries
Policy Statement
(Regarding the Production of "Standard" or "Non-standard" Items)

Below is the department's (State L&I's) list of criteria to be used in determining whether a prefabricated item is "standard" or "non-standard". For items not appearing on WSDOT's predetermined list, these criteria shall be used by the Contractor (and the Contractor's subcontractors, agents to subcontractors, suppliers, manufacturers, and fabricators) to determine coverage under RCW 39.12. The production, in the State of Washington, of non-standard items is covered by RCW 39.12, and the production of standard items is not. The production of any item outside the State of Washington is not covered by RCW 39.12.

1. Is the item fabricated for a public works project? If not, it is not subject to RCW 39.12. If it is, go to question 2.

2. Is the item fabricated on the public works jobsite? If it is, the work is covered under RCW 39.12. If not, go to question 3.

3. Is the item fabricated in an assembly/fabrication plant set up for, and dedicated primarily to, the public works project? If it is, the work is covered by RCW 39.12. If not, go to question 4.

4. Does the item require any assembly, cutting, modification or other fabrication by the supplier? If not, the work is not covered by RCW 39.12. If yes, go to question 5.

5. Is the prefabricated item intended for the public works project typically an inventory item which could reasonably be sold on the general market? If not, the work is covered by RCW 39.12. If yes, go to question 6.

6. Does the specific prefabricated item, generally defined as standard, have any unusual characteristics such as shape, type of material, strength requirements, finish, etc? If yes, the work is covered under RCW 39.12.

Any firm with questions regarding the policy, WSDOT's Predetermined List, or for determinations of covered and non-covered workers shall be directed to State L&I at (360) 902-5330.

Provided to Builders Exchange of WA, Inc. For usage Conditions Agreement see www.bxwa.com - Always Verify Scal

WSDOT's
Predetermined List for
Suppliers - Manufactures - Fabricator

Below is a list of potentially prefabricated items, originally furnished by WSDOT to Washington State Department of Labor and Industries, that may be considered non-standard and therefore covered by the prevailing wage law, RCW 39.12. Items marked with an X in the "YES" column should be considered to be non-standard and therefore covered by RCW 39.12. Items marked with an X in the "NO" column should be considered to be standard and therefore not covered. Of course, exceptions to this general list may occur, and in that case shall be evaluated according to the criteria described in State and L&I's policy statement.

	ITEM DESCRIPTION	YES	NO
1.	Metal rectangular frames, solid metal covers, herringbone grates, and bi-directional vaned grates for Catch Basin Types 1, 1L, 1P, and 2 and Concrete Inlets. See Std. Plans		X
2.	Metal circular frames (rings) and covers, circular grates, and prefabricated ladders for Manhole Types 1, 2, and 3, Drywell Types 1, 2, and 3 and Catch Basin Type 2. See Std. Plans		X
3.	Prefabricated steel grate supports and welded grates, metal frames and dual vaned grates, and Type 1, 2, and 3 structural tubing grates for Drop Inlets. See Std. Plans.		X
4.	Concrete Pipe - Plain Concrete pipe and reinforced concrete pipe Class 2 to 5 sizes smaller than 60 inch diameter.		X
5.	Concrete Pipe - Plain Concrete pipe and reinforced concrete pipe Class 2 to 5 sizes larger than 60 inch diameter.		X
6.	Corrugated Steel Pipe - Steel lock seam corrugated pipe for culverts and storm sewers, sizes 30 inch to 120 inches in diameter. May also be treated, 1 thru 5.		X
7.	Corrugated Aluminum Pipe - Aluminum lock seam corrugated pipe for culverts and storm sewers, sizes 30 inch to 120 inches in diameter. May also be treated, #5.		X

Provided to Builders Exchange of WA, Inc. For usage Conditions Agreement see www.bxwa.com - Always Verify Scal

	ITEM DESCRIPTION	YES	NO
8.	Anchor Bolts & Nuts - Anchor Bolts and Nuts, for mounting sign structures, luminaries and other items, shall be made from commercial bolt stock. See Contract Plans and Std. Plans for size and material type.		X
9.	Aluminum Pedestrian Handrail - Pedestrian handrail conforming to the type and material specifications set forth in the contract plans. Welding of aluminum shall be in accordance with Section 9-28.14(3).	X	
10.	Major Structural Steel Fabrication - Fabrication of major steel items such as trusses, beams, girders, etc., for bridges.	X	
11.	Minor Structural Steel Fabrication - Fabrication of minor steel Items such as special hangers, brackets, access doors for structures, access ladders for irrigation boxes, bridge expansion joint systems, etc., involving welding, cutting, punching and/or boring of holes. See Contact Plans for item description and shop drawings.	X	
12.	Aluminum Bridge Railing Type BP - Metal bridge railing conforming to the type and material specifications set forth in the Contract Plans. Welding of aluminum shall be in accordance with Section 9-28.14(3).		X
13.	Concrete Piling--Precast-Prestressed concrete piling for use as 55 and 70 ton concrete piling. Concrete to conform to Section 9-19.1 of Std. Spec..	X	
14.	Precast Manhole Types 1, 2, and 3 with cones, adjustment sections and flat top slabs. See Std. Plans.		X
15.	Precast Drywell Types 1, 2, and with cones and adjustment Sections. See Std. Plans.		X
16.	Precast Catch Basin - Catch Basin type 1, 1L, 1P, and 2 With adjustment sections. See Std. Plans.		X

Provided to Builders Exchange of WA, Inc. For usage Conditions Agreement see www.bxwa.com - Always Verify Scal

	ITEM DESCRIPTION	YES	NO
17.	Precast Concrete Inlet - with adjustment sections, See Std. Plans		X
18.	Precast Drop Inlet Type 1 and 2 with metal grate supports. See Std. Plans.		X
19.	Precast Grate Inlet Type 2 with extension and top units. See Std. Plans		X
20.	Metal frames, vaned grates, and hoods for Combination Inlets. See Std. Plans		X
21.	Precast Concrete Utility Vaults - Precast Concrete utility vaults of various sizes. Used for in ground storage of utility facilities and controls. See Contract Plans for size and construction requirements. Shop drawings are to be provided for approval prior to casting		X
22.	Vault Risers - For use with Valve Vaults and Utilities X Vaults.		X
23.	Valve Vault - For use with underground utilities. See Contract Plans for details.		X
24.	Precast Concrete Barrier - Precast Concrete Barrier for use as new barrier or may also be used as Temporary Concrete Barrier. Only new state approved barrier may be used as permanent barrier.		X
25.	Reinforced Earth Wall Panels – Reinforced Earth Wall Panels in size and shape as shown in the Plans. Fabrication plant has annual approval for methods and materials to be used. See Shop Drawing. Fabrication at other locations may be approved, after facilities inspection, contact HQ. Lab.	X	
26.	Precast Concrete Walls - Precast Concrete Walls - tilt-up wall panel in size and shape as shown in Plans. Fabrication plant has annual approval for methods and materials to be used	X	

Provided to Builders Exchange of WA, Inc. For usage Conditions Agreement see www.bxwa.com - Always Verify Scal

	ITEM DESCRIPTION	YES	NO
27.	Precast Railroad Crossings - Concrete Crossing Structure Slabs.	X	
28.	12, 18 and 26 inch Standard Precast Prestressed Girder – Standard Precast Prestressed Girder for use in structures. Fabricator plant has annual approval of methods and materials to be used. Shop Drawing to be provided for approval prior to casting girders. See Std. Spec. Section 6-02.3(25)A	X	
29.	Prestressed Concrete Girder Series 4-14 - Prestressed Concrete Girders for use in structures. Fabricator plant has annual approval of methods and materials to be used. Shop Drawing to be provided for approval prior to casting girders. See Std. Spec. Section 6-02.3(25)A .	X	
30.	Prestressed Tri-Beam Girder - Prestressed Tri-Beam Girders for use in structures. Fabricator plant has annual approval of methods and materials to be used. Shop Drawing to be provided for approval prior to casting girders. See Std. Spec. Section 6-02.3(25)A	X	
31.	Prestressed Precast Hollow-Core Slab – Precast Prestressed Hollow-core slab for use in structures. Fabricator plant has annual approval of methods and materials to be used. Shop Drawing to be provided for approval prior to casting girders. See Std. Spec. Section 6-02.3(25)A.	X	
32.	Prestressed-Bulb Tee Girder - Bulb Tee Prestressed Girder for use in structures. Fabricator plant has annual approval of methods and materials to be used. Shop Drawing to be provided for approval prior to casting girders. See Std. Spec. Section 6-02.3(25)A	X	
33.	Monument Case and Cover See Std. Plan.		X

Provided to Builders Exchange of WA, Inc. For usage Conditions Agreement see www.bxwa.com - Always Verify Scal

	ITEM DESCRIPTION	YES	NO
34.	Cantilever Sign Structure - Cantilever Sign Structure fabricated from steel tubing meeting AASHTO-M-183. See Std. Plans, and Contract Plans for details. The steel structure shall be galvanized after fabrication in accordance with AASHTO-M-111.	X	
35.	Mono-tube Sign Structures - Mono-tube Sign Bridge fabricated to details shown in the Plans. Shop drawings for approval are required prior to fabrication.	X	
36.	Steel Sign Bridges - Steel Sign Bridges fabricated from steel tubing meeting AASHTO-M-138 for Aluminum Alloys. See Std. Plans, and Contract Plans for details. The steel structure shall be galvanized after fabrication in accordance with AASHTO-M-111.	X	
37.	Steel Sign Post - Fabricated Steel Sign Posts as detailed in Std Plans. Shop drawings for approval are to be provided prior to fabrication		X
38.	Light Standard-Prestressed - Spun, prestressed, hollow concrete poles.	X	
39.	Light Standards - Lighting Standards for use on highway illumination systems, poles to be fabricated to conform with methods and materials as specified on Std. Plans. See Specia Provisions for pre-approved drawings.	X	
40.	Traffic Signal Standards - Traffic Signal Standards for use on highway and/or street signal systems. Standards to be fabricated to conform with methods and material as specified on Std. Plans. See Special Provisions for pre-approved drawings	X	
41.	Precast Concrete Sloped Mountable Curb (Single and DualFaced) See Std. Plans.		X

Provided to Builders Exchange of WA, Inc. For usage Conditions Agreement see www.bxwa.com - Always Verify Scal

	ITEM DESCRIPTION	YES	NO
42.	Traffic Signs - Prior to approval of a Fabricator of Traffic Signs, the sources of the following materials must be submitted and approved for reflective sheeting, legend material, and aluminum sheeting. **NOTE:** *** Fabrication inspection required. Only signs tagged "Fabrication Approved" by WSDOT Sign Fabrication Inspector to be installed	X	X
		Custom Message	Std Signing Message
43.	Cutting & bending reinforcing steel		X
44.	Guardrail components	X	X
		Custom End Sec	Standard Sec
45.	Aggregates/Concrete mixes	Covered by WAC 296-127-018	
46.	Asphalt	Covered by WAC 296-127-018	
47.	Fiber fabrics		X
48.	Electrical wiring/components		X
49.	treated or untreated timber pile		X
50.	Girder pads (elastomeric bearing)	X	
51.	Standard Dimension lumber		X
52.	Irrigation components		X

Provided to Builders Exchange of WA, Inc. For usage Conditions Agreement see www.bxwa.com - Always Verify Scal

ITEM DESCRIPTION	YES	NO
53. Fencing materials		X
54. Guide Posts		X
55. Traffic Buttons		X
56. Epoxy		X
57. Cribbing		X
58. Water distribution materials		X
59. Steel "H" piles		X
60. Steel pipe for concrete pile casings		X
61. Steel pile tips, standard		X
62. Steel pile tips, custom	X	

Prefabricated items specifically produced for public works projects that are prefabricated in a county other than the county wherein the public works project is to be completed, the wage for the offsite prefabrication shall be the applicable prevailing wage for the county in which the actual prefabrication takes place.

It is the manufacturer of the prefabricated product to verify that the correct county wage rates are applied to work they perform.

See RCW 39.12.010
(The definition of "locality" in RCW 39.12.010(2) contains the phrase "wherein the physical work is being performed." The department interprets this phrase to mean the actual work site.

Provided to Builders Exchange of WA, Inc. For usage Conditions Agreement see www.bxwa.com - Always Verify Scal

WSDOT's List of State Occupations not applicable to Heavy and Highway Construction Projects

This project is subject to the state hourly minimum rates for wages and fringe benefits in the contract provisions, as provided by the state Department of Labor and Industries.
The following list of occupations, is comprised of those occupations that are not normally used in the construction of heavy and highway projects.
When considering job classifications for use and / or payment when bidding on, or building heavy and highway construction projects for, or administered by WSDOT, these Occupations will be excepted from the included "Washington State Prevailing Wage Rates For Public Work Contracts" documents.

- Building Service Employees
- Electrical Fixture Maintenance Workers
- Electricians - Motor Shop
- Heating Equipment Mechanics
- Industrial Engine and Machine Mechanics
- Industrial Power Vacuum Cleaners
- Inspection, Cleaning, Sealing of Water Systems by Remote Control
- Laborers - Underground Sewer & Water
- Machinists (Hydroelectric Site Work)
- Modular Buildings
- Playground & Park Equipment Installers
- Power Equipment Operators - Underground Sewer & Water
- Residential *** ALL ASSOCIATED RATES ***
- Sign Makers and Installers (Non-Electrical)
- Sign Makers and Installers (Electrical)
- Stage Rigging Mechanics (Non Structural)

The following occupations may be used only as outlined in the preceding text concerning "WSDOT's list for Suppliers - Manufacturers - Fabricators"

- Fabricated Precast Concrete Products
- Metal Fabrication (In Shop)

Definitions for the Scope of Work for prevailing wages may be found at the Washington State Department of Labor and Industries web site and in WAC Chapter 296-127.

Provided to Builders Exchange of WA, Inc. For usage Conditions Agreement see www.bxwa.com - Always Verify Scal

WAC 296-127-018 Agency filings affecting this section

Coverage and exemptions of workers involved in the production and delivery of gravel, concrete, asphalt, or similar materials.

(1) The materials covered under this section include but are not limited to: Sand, gravel, crushed rock, concrete, asphalt, or other similar materials.

(2) All workers, regardless of by whom employed, are subject to the provisions of chapter 39.12 RCW when they perform any or all of the following functions:

(a) They deliver or discharge any of the above-listed materials to a public works project site:

(i) At one or more point(s) directly upon the location where the material will be incorporated into the project; or

(ii) At multiple points at the project; or

(iii) Adjacent to the location and coordinated with the incorporation of those materials.

(b) They wait at or near a public works project site to perform any tasks subject to this section of the rule.

(c) They remove any materials from a public works construction site pursuant to contract requirements or specifications (e.g., excavated materials, materials from demolished structures, clean-up materials, etc.).

(d) They work in a materials production facility (e.g., batch plant, borrow pit, rock quarry, etc.,) which is established for a public works project for the specific, but not necessarily exclusive, purpose of supplying materials for the project.

(e) They deliver concrete to a public works site regardless of the method of incorporation.

(f) They assist or participate in the incorporation of any materials into the public works project.

Provided to Builders Exchange of WA, Inc. For usage Conditions Agreement see www.bxwa.com - Always Verify Scal

(3) All travel time that relates to the work covered under subsection (2) of this section requires the payment of prevailing wages. Travel time includes time spent waiting to load, loading, transporting, waiting to unload, and delivering materials. Travel time would include all time spent in travel in support of a public works project whether the vehicle is empty or full. For example, travel time spent returning to a supply source to obtain another load of material for use on a public works site or returning to the public works site to obtain another load of excavated material is time spent in travel that is subject to prevailing wage. Travel to a supply source, including travel from a public works site, to obtain materials for use on a private project would not be travel subject to the prevailing wage.

(4) Workers are not subject to the provisions of chapter 39.12 RCW when they deliver materials to a stockpile.

(a) A "stockpile" is defined as materials delivered to a pile located away from the site of incorporation such that the stockpiled materials must be physically moved from the stockpile and transported to another location on the project site in order to be incorporated into the project.

(b) A stockpile does not include any of the functions described in subsection (2)(a) through (f) of this section; nor does a stockpile include materials delivered or distributed to multiple locations upon the project site; nor does a stockpile include materials dumped at the place of incorporation, or adjacent to the location and coordinated with the incorporation.

(5) The applicable prevailing wage rate shall be determined by the locality in which the work is performed. Workers subject to subsection (2)(d) of this section, who produce such materials at an off-site facility shall be paid the applicable prevailing wage rates for the county in which the off-site facility is located. Workers subject to subsection (2) of this section, who deliver such materials to a public works project site shall be paid the applicable prevailing wage rates for the county in which the public works project is located.

[Statutory Authority: Chapter 39.12 RCW, RCW 43.22.051 and 43.22.270. 08-24-101, § 296-127-018, filed 12/2/08, effective 1/2/09. Statutory Authority: Chapters 39.04 and 39.12 RCW and RCW 43.22.270. 92-01-104 and 92-08-101, § 296-127-018, filed 12/18/91 and 4/1/92, effective 8/31/92.]

Provided to Builders Exchange of WA, Inc. For usage Conditions Agreement see www.bxwa.com - Always Verify Scal

****

Overtime Codes

Overtime calculations are based on the hourly rate actually paid to the worker. On public works projects, the hourly rate must be not less than the prevailing rate of wage minus the hourly rate of the cost of fringe benefits actually provided for the worker.

1. ALL HOURS WORKED IN EXCESS OF EIGHT (8) HOURS PER DAY OR FORTY (40) HOURS PER WEEK SHALL BE PAID AT ONE AND ONE-HALF TIMES THE HOURLY RATE OF WAGE.

B. All hours worked on Saturdays shall be paid at one and one-half times the hourly rate of wage. All hours worked on Sundays and holidays shall be paid at double the hourly rate of wage.

C. The first two (2) hours after eight (8) regular hours Monday through Friday and the first ten (10) hours on Saturday shall be paid at one and one-half times the hourly rate of wage. All other overtime hours and all hours worked on Sundays and holidays shall be paid at double the hourly rate of wage.

D. The first two (2) hours before or after a five-eight (8) hour workweek day or a four-ten (10) hour workweek day and the first eight (8) hours worked the next day after either workweek shall be paid at one and one-half times the hourly rate of wage. All additional hours worked and all worked on Sundays and holidays shall be paid at double the hourly rate of wage.

E. The first two (2) hours after eight (8) regular hours Monday through Friday and the first eight (8) hours on Saturday shall be paid at one and one-half times the hourly rate of wage. All other hours worked Monday through Saturday, and all hours worked on Sundays and holidays shall be paid at double the hourly rate of wage.

F. The first two (2) hours after eight (8) regular hours Monday through Friday and the first ten (10) hours on Saturday shall be paid at one and one-half times the hourly rate of wage. All other overtime hours worked, except Labor Day, shall be paid at double the hourly rate of wage. All hours worked on Labor Day shall be paid at three times the hourly rate of wage.

G. The first ten (10) hours worked on Saturdays and the first ten (10) hours worked on a fifth calendar weekday in a four-ten hour schedule, shall be paid at one and one-half times the hourly rate of wage. All hours worked in excess of ten (10) hours per day Monday through Saturday and all hours worked on Sundays and holidays shall be paid at double the hourly rate of wage.

H. All hours worked on Saturdays (except makeup days if work is lost due to inclement weather conditions or equipment breakdown) shall be paid at one and one-half times the hourly rate of wage. All hours worked Monday through Saturday over twelve (12) hours and all hours worked on Sundays and holidays shall be paid at double the hourly rate of wage.

I. All hours worked on Sundays and holidays shall also be paid at double the hourly rate of wage.

J. The first two (2) hours after eight (8) regular hours Monday through Friday and the first ten (10) hours on Saturday shall be paid at one and one-half times the hourly rate of wage. All hours worked over ten (10) hours Monday through Saturday, Sundays and holidays shall be paid at double the hourly rate of wage.

K. All hours worked on Saturdays and Sundays shall be paid at one and one-half times the hourly rate of wage. All hours worked on holidays shall be paid at double the hourly rate of wage.

M. All hours worked on Saturdays (except makeup days if work is lost due to inclement weather conditions) shall be paid at one and one-half times the hourly rate of wage. All hours worked on Sundays and holidays shall be paid at double the hourly rate of wage.

Provided to Builders Exchange of WA, Inc. For usage Conditions Agreement see www.bxwa.com - Always Verify Scal

Overtime Codes Continued

1. N. All hours worked on Saturdays (except makeup days) shall be paid at one and one-half times the hourly rate of wage. All hours worked on Sundays and holidays shall be paid at double the hourly rate of wage.

O. The first ten (10) hours worked on Saturday shall be paid at one and one-half times the hourly rate of wage. All hours worked on Sundays, holidays and after twelve (12) hours, Monday through Friday and after ten (10) hours on Saturday shall be paid at double the hourly rate of wage.

P. All hours worked on Saturdays (except makeup days if circumstances warrant) and Sundays shall be paid at one and one-half times the hourly rate of wage. All hours worked on holidays shall be paid at double the hourly rate of wage.

Q. The first two (2) hours after eight (8) regular hours Monday through Friday and up to ten (10) hours worked on Saturdays shall be paid at one and one-half times the hourly rate of wage. All hours worked in excess of ten (10) hours per day Monday through Saturday and all hours worked on Sundays and holidays (except Christmas day) shall be paid at double the hourly rate of wage. All hours worked on Christmas day shall be paid at two and one-half times the hourly rate of wage.

R. All hours worked on Sundays and holidays shall be paid at two times the hourly rate of wage.

U. All hours worked on Saturdays shall be paid at one and one-half times the hourly rate of wage. All hours worked on Sundays and holidays (except Labor Day) shall be paid at two times the hourly rate of wage. All hours worked on Labor Day shall be paid at three times the hourly rate of wage.

V. All hours worked on Sundays and holidays (except Thanksgiving Day and Christmas day) shall be paid at one and one-half times the hourly rate of wage. All hours worked on Thanksgiving Day and Christmas day shall be paid at double the hourly rate of wage.

W. All hours worked on Saturdays and Sundays (except make-up days due to conditions beyond the control of the employer)) shall be paid at one and one-half times the hourly rate of wage. All hours worked on holidays shall be paid at double the hourly rate of wage.

X. The first four (4) hours after eight (8) regular hours Monday through Friday and the first twelve (12) hours on Saturday shall be paid at one and one-half times the hourly rate of wage. All hours worked over twelve (12) hours Monday through Saturday, Sundays and holidays shall be paid at double the hourly rate of wage. When holiday falls on Saturday or Sunday, the day before Saturday, Friday, and the day after Sunday, Monday, shall be considered the holiday and all work performed shall be paid at double the hourly rate of wage.

Y. All hours worked outside the hours of 5:00 am and 5:00 pm (or such other hours as may be agreed upon by any employer and the employee) and all hours worked in excess of eight (8) hours per day (10 hours per day for a 4 x 10 workweek) and on Saturdays and holidays (except labor day) shall be paid at one and one-half times the hourly rate of wage. (except for employees who are absent from work without prior approval on a scheduled workday during the workweek shall be paid at the straight-time rate until they have worked 8 hours in a day (10 in a 4 x 10 workweek) or 40 hours during that workweek.) All hours worked Monday through Saturday over twelve (12) hours and all hours worked on Sundays and Labor Day shall be paid at double the hourly rate of wage.

Z. All hours worked on Saturdays and Sundays shall be paid at one and one-half times the hourly rate of wage. All hours worked on holidays shall be paid the straight time rate of pay in addition to holiday pay.

Provided to Builders Exchange of WA, Inc. For usage Conditions Agreement see www.bxwa.com - Always Verify Scal

Overtime Codes Continued

2. ALL HOURS WORKED IN EXCESS OF EIGHT (8) HOURS PER DAY OR FORTY (40) HOURS PER WEEK SHALL BE PAID AT ONE AND ONE-HALF TIMES THE HOURLY RATE OF WAGE.

   B. All hours worked on holidays shall be paid at one and one-half times the hourly rate of wage.

   F. The first eight (8) hours worked on holidays shall be paid at the straight hourly rate of wage in addition to the holiday pay. All hours worked in excess of eight (8) hours on holidays shall be paid at double the hourly rate of wage.

   M. This code appears to be missing. All hours worked on Saturdays, Sundays and holidays shall be paid at double the hourly rate of wage.

   R. All hours worked on Sundays and holidays and all hours worked over sixty (60) in one week shall be paid at double the hourly rate of wage.

   U. All hours worked on Saturdays shall be paid at one and one-half times the hourly rate of wage. All hours worked over 12 hours in a day or on Sundays and holidays shall be paid at double the hourly rate of wage.

3. ALL HOURS WORKED IN EXCESS OF EIGHT (8) HOURS PER DAY OR FORTY (40) HOURS PER WEEK SHALL BE PAID AT ONE AND ONE-HALF TIMES THE HOURLY RATE OF WAGE.

   F. All hours worked on Saturday shall be paid at one and one-half times the hourly rate of wage. All hours worked on Sunday shall be paid at two times the hourly rate of wage. All hours worked on paid holidays shall be paid at two and one-half times the hourly rate of wage including holiday pay.

   H. All work performed on Sundays between March 16th and October 14th and all Holidays shall be compensated for at two (2) times the regular rate of pay. Work performed on Sundays between October 15th and March 15th shall be compensated at one and one half (1-1/2) times the regular rate of pay.

   J. All hours worked between the hours of 10:00 pm and 5:00 am, Monday through Friday, and all hours worked on Saturdays shall be paid at a one and one-half times the hourly rate of wage. All hours worked on Sundays and holidays shall be paid at double the hourly rate of wage.

   K. Work performed in excess of eight (8) hours of straight time per day, or ten (10) hours of straight time per day when four ten (10) hour shifts are established, or forty (40) hours of straight time per week, Monday through Friday, or outside the normal 5 am to 6pm shift, and all work on Saturdays shall be paid at one and one-half times the hourly rate of wage. All work performed after 6:00 pm Saturday to 5:00 am Monday and Holidays, and all hours worked in excess of twelve (12) hours in a single shift shall be paid at double the hourly rate of wage.

   After an employee has worked eight (8) hours at an applicable overtime rate, all additional hours shall be at the applicable overtime rate until such time as the employee has had a break of eight (8) hours or more. When an employee returns to work without at least eight (8) hours time off since their previous shift, all such time shall be a continuation of shift and paid at the applicable overtime rate until he/she shall have the eight (8) hours rest period.

Provided to Builders Exchange of WA, Inc. For usage Conditions Agreement see www.bxwa.com - Always Verify Scal

Overtime Codes Continued

4. ALL HOURS WORKED IN EXCESS OF EIGHT (8) HOURS PER DAY OR FORTY (40) HOURS PER WEEK SHALL BE PAID AT ONE AND ONE-HALF TIMES THE HOURLY RATE OF WAGE.

A. All hours worked in excess of eight (8) hours per day or forty (40) hours per week shall be paid at double the hourly rate of wage. All hours worked on Saturdays, Sundays and holidays shall be paid at double the hourly rate of wage

C. On Monday through Friday, the first four (4) hours of overtime after eight (8) hours of straight time work shall be paid at one and one half (1-1/2) times the straight time rate of pay, unless a four (4) day ten (10) hour workweek has been established. On a four (4) day ten (10) hour workweek scheduled Monday through Thursday, or Tuesday through Friday, the first two (2) hours of overtime after ten (10) hours of straight time work shall be paid at one and one half (1-1/2) times the straight time rate of pay. On Saturday, the first twelve (12) hours of work shall be paid at one and one half (1-1/2) times the straight time rate of pay, except that if the job is down on Monday through Friday due to weather conditions or other conditions outside the control of the employer, the first ten (10) hours on Saturday may be worked at the straight time rate of pay. All hours worked over twelve (12) hours in a day and all hours worked on Sunday and Holidays shall be paid at two (2) times the straight time rate of pay.

D. All hours worked in excess of eight (8) hours per day or forty (40) hours per week shall be paid at double the hourly rate of wage. All hours worked on Saturday, Sundays and holidays shall be paid at double the hourly rate of pay. Rates include all members of the assigned crew.

EXCEPTION:
On all multipole structures and steel transmission lines, switching stations, regulating, capacitor stations, generating plants, industrial plants, associated installations and substations, except those substations whose primary function is to feed a distribution system, will be paid overtime under the following rates:

The first two (2) hours after eight (8) regular hours Monday through Friday of overtime on a regular workday, shall be paid at one and one-half times the hourly rate of wage. All hours in excess of ten (10) hours will be at two (2) times the hourly rate of wage. The first eight (8) hours worked on Saturday will be paid at one and one-half (1-1/2) times the hourly rate of wage. All hours worked in excess of eight (8) hours on Saturday, and all hours worked on Sundays and holidays will be at the double the hourly rate of wage.

All overtime eligible hours performed on the above described work that is energized, shall be paid at the double the hourly rate of wage.

E. The first two (2) hours after eight (8) regular hours Monday through Friday and the first eight (8) hours on Saturday shall be paid at one and one-half times the hourly rate of wage. All other hours worked Monday through Saturday, and all hours worked on Sundays and holidays shall be paid at double the hourly rate of wage.

On a four-day, ten-hour weekly schedule, either Monday thru Thursday or Tuesday thru Friday schedule, all hours worked after ten shall be paid at double the hourly rate of wage. The Monday or Friday not utilized in the normal four-day, ten hour work week, and Saturday shall be paid at one and one half (1½) times the regular shift rate for the first eight (8) hours. All other hours worked Monday through Saturday, and all hours worked on Sundays and holidays shall be paid at double the hourly rate of wage.

G. All hours worked on Saturdays shall be paid at one and one-half times the hourly rate of wage. All hours worked Monday through Saturday over twelve (12) hours and all hours worked on Sundays and holidays shall be paid at double the hourly rate of wage.

I. The First eight (8) hours worked on Saturdays shall be paid at one and one-half times the hourly rate of wage. All hours worked in excess of eight (8) per day on Saturdays shall be paid at double the hourly rate of wage. All hours worked on Sundays and holidays shall be paid at double the hourly rate of wage.

Provided to Builders Exchange of WA, Inc. For usage Conditions Agreement see www.bxwa.com - Always Verify Scal

Overtime Codes Continued

4. J. The first eight (8) hours worked on a Saturday shall be paid at one and one-half times the hourly rate of wage. All hours worked in excess of eight (8) hours on a Saturday shall be paid at double the hourly rate of wage. All hours worked over twelve (12) in a day, and all hours worked on Sundays and Holidays shall be paid at double the hourly rate of wage.

K. All hours worked on a Saturday shall be paid at one and one-half times the hourly rate of wage, so long as Saturday is the sixth consecutive day worked. All hours worked over twelve (12) in a day Monday through Saturday, and all hours worked on Sundays and Holidays shall be paid at double the hourly rate of wage.

L. The first twelve (12) hours worked on a Saturday shall be paid at one and one-half times the hourly rate of wage. All hours worked on a Saturday in excess of twelve (12) hours shall be paid at double the hourly rate of pay. All hours worked over twelve (12) in a day Monday through Friday, and all hours worked on Sundays shall be paid at double the hourly rate of wage. All hours worked on a holiday shall be paid at one and one-half times the hourly rate of wage, except that all hours worked on Labor Day shall be paid at double the hourly rate of pay.

S. On a four (4) day ten (10) hour workweek scheduled Monday through Thursday, or Tuesday through Friday, work performed in excess of (10) hours shall be paid at one and one half (1-1/2) times the hourly rate of pay. On Monday through Friday, work performed outside the normal work hours of 6:00 a.m. and 6:00 p.m. shall be paid at one and one-half (1-1/2) times the straight time rate, (except for special shifts or multiple shift operations).

All hours worked on Saturdays shall be paid at one and one-half times the hourly rate of wage. All work performed on Sundays and holidays shall be paid at double the hourly rate of wage. When an employee returns to work without at least eight (8) hours time off since their previous shift, all such time shall be a continuation of shift and paid at the applicable overtime rate until such time as the employee has had a break of eight (8) hours.

Multiple Shift Operations: When the first shift of a multiple shift (a two or three shift) operation is started at the basic straight time rate or at a specific overtime rate, all shifts of that day's operation shall be completed at that rate. Special Shifts: The Special Shift Premium is the basic hourly rate of pay plus $2.00 an hour. When due to conditions beyond the control of the employer or when an owner (not acting as the contractor), a government agency or the contract specifications require more than four (4) hours of a special shift can only be performed outside the normal 6am to 6pm shift then the special shift premium will be applied to the basic straight time for the entire shift. When an employee works on a special shift, they shall be paid the special shift premium for each hour worked unless they are in overtime or double-time status. (For example, the special shift premium does not waive the overtime requirements for work performed on Saturday or Sunday).

U. The first four (4) hours after eight (8) regular hours Monday through Friday and the first twelve (12) hours on Saturday shall be paid at one and one-half times the hourly rate of wage. (Except on makeup days if work is lost due to inclement weather, then the first eight (8) hours on Saturday may be paid the regular rate.) All hours worked over twelve (12) hours Monday through Saturday, and all hours worked on Sundays and holidays shall be paid at double the hourly rate of wage.

Provided to Builders Exchange of WA, Inc. For usage Conditions Agreement see www.bxwa.com - Always Verify Scal

Overtime Codes Continued

4. X. All hours worked on Saturdays shall be paid at one and one-half times the hourly rate of wage. All hours worked on Sundays and holidays shall be paid at double the hourly rate of wage. Work performed outside the normal shift of 6 am to 6pm shall be paid at one and one-half the straight time rate, (except for special shifts or three shift operations). All work performed on Sundays and holidays shall be paid at double the hourly rate of wage. Shifts may be established when considered necessary by the Employer.

The Employer may establish shifts consisting of eight (8) or ten (10) hours of work (subject to WAC 296-127-022), that shall constitute a normal forty (40) hour work week. The Employer can change from a 5-eight to a 4-ten hour schedule or back to the other. All hours of work on these shifts shall be paid for at the straight time hourly rate. Work performed in excess of eight hours (or ten hours per day (subject to WAC 296-127-022) shall be paid at one and one-half the straight time rate.

When due to conditions beyond the control of the Employer, or when contract specifications require that work can only be performed outside the regular day shift, then by mutual agreement a special shift may be worked at the straight time rate, eight (8) hours work for eight (8) hours pay. The starting time shall be arranged to fit such conditions of work.

When an employee returns to work without at a break of eight (8) hours since their previous shift, all such time shall be a continuation of shift and paid at the applicable overtime rate until such time as the employee has had a break of eight (8) hours.

Overtime Codes Continued

11. ALL HOURS WORKED IN EXCESS OF EIGHT (8) HOURS PER DAY OR FORTY (40) HOURS PER WEEK SHALL BE PAID AT ONE AND ONE-HALF TIMES THE HOURLY RATE OF WAGE.

B After an employee has worked eight (8) hours, all additional hours worked shall be paid at the applicable overtime rate until such time as the employee has had a break of eight (8) hours or more.

C The first two (2) hours after eight (8) regular hours Monday through Friday and the first eight (8) hours on Saturday shall be paid at one and one-half times the hourly rate of wage. All other overtime hours worked, except Labor Day, and all hours on Sunday shall be paid at double the hourly rate of wage. All hours worked on Labor Day shall be paid at three times the hourly rate of wage. All non-overtime and non-holiday hours worked between 4:00 pm and 5:00 am, Monday through Friday, shall be paid at a premium rate of 15% over the hourly rate of wage.

D. All hours worked on Saturdays and holidays shall be paid at one and one-half times the hourly rate of wage. All hours worked on Sundays shall be paid at double the hourly rate of wage.

After an employee has worked eight (8) hours, all additional hours worked shall be paid at the applicable overtime rate until such time as the employee has had a break of eight (8) hours or more.

E. The first two (2) hours after eight (8) regular hours Monday through Friday, the first ten (10) hours on Saturday, and the first ten (10) hours worked on Holidays shall be paid at one and one-half times the hourly rate of wage. All hours worked over ten (10) hours Monday through Saturday, and Sundays shall be paid at double the hourly rate of wage.

After an employee has worked eight (8) hours, all additional hours worked shall be paid at the applicable overtime rate until such time as the employee has had a break of eight (8) hours or more.

Provided to Builders Exchange of WA, Inc. For usage Conditions Agreement see www.bxwa.com - Always Verify Scal

Overtime Codes Continued

11. F. The first two (2) hours after eight (8) regular hours Monday through Friday and the first eight (8) hours on Saturday shall be paid at one and one-half times the hourly rate of wage. All other hours worked Monday through Saturday, and all hours worked on Sundays and holidays shall be paid at double the hourly rate of wage.

On a four-day, ten-hour weekly schedule, either Monday thru Thursday or Tuesday thru Friday schedule, all hours worked after ten shall be paid at double the hourly rate of wage. The Monday or Friday not utilized in the normal four-day, ten hour work week, and Saturday shall be paid at one-half times the hourly rate of wage for the first eight (8) hours. All other hours worked Monday through Saturday, and all hours worked on Sundays and holidays shall be paid at double the hourly rate of wage.

G. Work performed in excess of eight (8) hours of straight time per day, or ten (10) hours of straight time per day when four ten (10) hour shifts are established, or forty (40) hours of straight time per week, Monday through Friday, or outside the normal 5 am to 6pm shift, and all work on Saturdays shall be paid at one and one-half times the hourly rate of wage.

All work performed after 6:00 pm Saturday to 5:00 am Monday and Holidays, and all hours worked in excess of twelve (12) hours in a single shift shall be paid at double the hourly rate of wage.

After an employee has worked eight (8) hours at an applicable overtime rate, all additional hours shall be at the applicable overtime rate until such time as the employee has had a break of nine (9) hours or more. When an employee returns to work without at least nine (9) hours time off since their previous shift, all such time shall be a continuation of shift and paid at the applicable overtime rate until he/she shall have the nine (9) hours rest period.

H. Work performed in excess of eight (8) hours of straight time per day, or ten (10) hours of straight time per day when four ten (10) hour shifts are established, or forty (40) hours of straight time per week, Monday through Friday, or outside the normal 5 am to 6pm shift, and all work on Saturdays shall be paid at one and one-half times the hourly rate of wage.

All work performed after 6:00 pm Saturday to 5:00 am Monday and Holidays, and all hours worked in excess of twelve (12) hours in a single shift shall be paid at double the hourly rate of wage.

After an employee has worked eight (8) hours at an applicable overtime rate, all additional hours shall be at the applicable overtime rate until such time as the employee has had a break of ten (10) hours or more. When an employee returns to work without at least ten (10) hours time off since their previous shift, all such time shall be a continuation of shift and paid at the applicable overtime rate until he/she shall have the ten (10) hours rest period.

J. All hours worked on holidays shall be paid at double the hourly rate of wage.

K. On Monday through Friday hours worked outside 4:00 am and 5:00 pm, and the first two (2) hours after eight (8) hours worked shall be paid at one and one-half times the hourly rate. All hours worked over 10 hours per day Monday through Friday, and all hours worked on Saturdays, Sundays, and Holidays worked shall be paid at double the hourly rate of wage.

L. An employee working outside 5:00 am and 5:00 pm shall receive an additional two dollar ($2.00) per hour for all hours worked that shift. All hours worked on holidays shall be paid at one and one-half times the hourly rate of wage. All hours worked on holidays shall be paid at one and one-half times the hourly rate of wage.

Provided to Builders Exchange of WA, Inc. For usage Conditions Agreement see www.bxwa.com - Always Verify Scal

Overtime Codes Continued

11. M. On Monday through Friday, the first four (4) hours of overtime after eight (8) hours of straight time work shall be paid at one and one half (1-1/2) times the straight time rate of pay, unless a four (4) day ten (10) hour workweek has been established. On a four (4) day ten (10) hour workweek scheduled Monday through Thursday, or Tuesday through Friday, the first two (2) hours of overtime after ten (10) hours of straight time work shall be paid at one and one half (1-1/2) times the straight time rate of pay.

Work performed outside the normal work hours of 5:00 a.m. and 6:00 p.m. shall be paid at one and one-half (1-1/2) times the straight time rate, (except for special shifts or multiple shift operations). When the first shift of a multiple shift (a two or three shift) operation is started at the basic straight time rate or at a specific overtime rate, all shifts of that day's operation shall be completed at that rate. When due to conditions beyond the control of the Employer or when contract specifications require that work can only be performed outside the regular day shift of 5:00 am to 6:00 pm, then a special shift may be worked at the straight time rate, plus the shift pay premium when applicable. The starting time of work will be arranged to fit such conditions of work. Such shift shall consist of eight (8) hours work for eight (8) hours pay or ten (10) hours work for ten (10) hours pay for four ten shifts.

On Saturday, the first twelve (12) hours of work shall be paid at one and one half (1-1/2) times the straight time rate of pay. All work performed after 6:00 pm Saturday to 5:00 am Monday, all work performed over twelve (12) hours, and all work performed on holidays shall be paid at double the straight time rate of pay.

Shift Pay Premium: In an addition to any overtime already required, all hours worked between the hours of 6:00 pm and 5:00 am shall receive an additional two dollars ($2.00) per hour.

N. All work performed over twelve hours in a shift and all work performed on Sundays and Holidays shall be paid at double the straight time rate.

Any time worked over eight (8) hours on Saturday shall be paid double the straight time rate, except employees assigned to work six 10-hour shifts per week shall be paid double the straight time rate for any time worked on Saturday over 10 hours.

O. All work performed on Saturdays, Sundays, and Holidays shall be paid at one and one half (1-1/2) times the straight time rate of pay.

Provided to Builders Exchange of WA, Inc. For usage Conditions Agreement see www.bxwa.com - Always Verify Scal

Overtime Codes Continued

11. P. Work performed in excess of ten (10) hours of straight time per day when four ten (10) hour shifts are established and all work on Saturdays, except for make-up days shall be paid at time and one-half (1 ½) the straight time rate.

Work performed outside the normal work hours of 5:00 a.m. and 6:00 p.m. shall be paid at one and one-half (1-1/2) times the straight time rate, (except for special shifts or multiple shift operations). When the first shift of multiple shift (a two or three shift) operation is started at the basic straight time rate or at a specific overtime rate, all shifts of that day's operation shall be completed at that rate. When due to conditions beyond the control of the Employer or when contract specifications require that work can only be performed outside the regular day shift of 5:00 a.m. to 6:00 p.m., then a special shift may be worked at the straight time rate, plus the shift pay premium when applicable. The starting time of work will be arranged to fit such conditions of work. Such shifts shall consist of eight (8) hours work for eight (8) hours pay or ten (10) hours work for ten (10) hours pay for four ten-hour shifts.

In the event the job is down due to weather conditions, then Saturday may, be worked as a voluntary make-up day at the straight time rate. However, Saturday shall not be utilized as a make-up day when a holiday falls on Friday. All work performed on Sundays and holidays and work in excess of twelve (12) hours per day shall be paid at double (2x) the straight time rate of pay.

After an employee has worked eight (8) hours at an applicable overtime rate, all additional hours shall be at the applicable overtime rate until such time as the employee has had a break of eight (8) hours.

When an employee returns to work without a break of eight (8) hours since their previous shift, all such time shall be a continuation of shift and paid at the applicable overtime rate until such time as the employee has had a break of eight (8) hours.

Q. All hours worked between the hours of 6:00 pm and 6:00 am, Monday through Saturday, shall be paid at a premium rate of 35% over the hourly rate of wage. Work performed on Sundays shall be paid at double time. All hours worked on holidays shall be paid at double the hourly rate of wage.

R On Monday through Saturday hours worked outside 6:00 am and 7:00 pm, and all hours after eight (8) hours worked shall be paid at one and one-half times the hourly rate. All hours worked on Sundays and Holidays shall be paid at double the hourly rate of wage.

When a holiday falls on a Saturday, the Friday before shall be the observed holiday. When a holiday falls on a Sunday, the following Monday shall be the observed holiday.

S. The first ten (10) hours worked on Saturdays shall be paid at one and one-half times the hourly rate of wage. In the event the job is down due to weather conditions, or other conditions beyond the control of the Employer, then Saturday may be worked at the straight time rate, for the first eight (8) hours, or the first ten (10) hours when a four day ten hour workweek has been established.

All hours worked Monday through Saturday over twelve (12) hours and all hours worked on Sundays and holidays shall be paid at double the hourly rate of wage.

When an employee returns to work without a break of eight (8) hours since their previous shift, all such time shall be a continuation of shift and paid at the applicable overtime rate until such time as the employee has had a break of eight (8) hours.

Provided to Builders Exchange of WA, Inc. For usage Conditions Agreement see www.bxwa.com - Always Verify Scal

11. T. On Monday through Friday, the first four (4) hours of overtime after eight (8) hours of straight time work shall be paid at one and one half (1-1/2) times the straight time rate of pay, unless a four (4) day ten (10) hour workweek has been established. On a four (4) day ten (10) hour workweek scheduled Monday through Thursday, or Tuesday through Friday, the first two (2) hours of overtime after ten (10) hours of straight time work shall be paid at one and one half (1-1/2) times the straight time rate of pay.

On Saturday, the first twelve (12) hours of work shall be paid at one and one half (1-1/2) times the straight time rate of pay, except that if the job is down on Monday through Friday due to weather conditions or other conditions outside the control of the employer, the first ten (10) hours on Saturday may be worked at the straight time rate of pay.

All hours worked over twelve (12) hours in a day and all hours worked on Sunday and Holidays shall be paid at two (2) times the straight time rate of pay.

U. On Monday through Friday, the first four (4) hours of overtime after eight (8) hours of straight time work shall be paid at one and one half (1-1/2) times the straight time rate of pay, unless a four (4) day ten (10) hour workweek has been established. On a four (4) day ten (10) hour workweek scheduled Monday through Thursday, or Tuesday through Friday, the first two (2) hours of overtime after ten (10) hours of straight time work shall be paid at one and one half (1-1/2) times the straight time rate of pay.

On Saturday, the first twelve (12) hours of work shall be paid at one and one half (1-1/2) times the straight time rate of pay, except that if the job is down on Monday through Friday due to weather conditions or other conditions outside the control of the employer, the first ten (10) hours on Saturday may be worked at the straight time rate of pay.

All hours worked over twelve (12) hours in a day and all hours worked on Sunday and Holidays shall be paid at two (2) times the straight time rate of pay.

If, due to conditions beyond the control of the Employer or when contract specifications require that work can only be performed outside the regular day shift, then a Special Shift may be worked, Monday through Friday, at the straight-time rate. The starting time of work for the Special Shift will be arranged to fit such conditions of work. Such Special Shift shall consist of eight (8) hours of work for eight (8) hours of pay or ten (10) hours of work for ten(10) hours of pay on a four-ten workday schedule.

Holiday Codes

5. A. Holidays: New Year's Day, Memorial Day, Independence Day, Labor Day, Thanksgiving Day, Friday after Thanksgiving Day, and Christmas Day (7).

B. Holidays: New Year's Day, Memorial Day, Independence Day, Labor Day, Thanksgiving Day, Friday after Thanksgiving Day, the day before Christmas, and Christmas Day (8).

C. Holidays: New Year's Day, Presidents' Day, Memorial Day, Independence Day, Labor Day, Thanksgiving Day, the Friday after Thanksgiving Day, And Christmas Day (8).

D. Holidays: New Year's Day, Memorial Day, Independence Day, Labor Day, Thanksgiving Day, the Friday and Saturday after Thanksgiving Day, And Christmas Day (8).

H. Holidays: New Year's Day, Memorial Day, Independence Day, Thanksgiving Day, the Day after Thanksgiving Day, And Christmas (6).

Provided to Builders Exchange of WA, Inc. For usage Conditions Agreement see www.bxwa.com - Always Verify Scal

Holiday Codes Continued

5. I. Holidays: New Year's Day, Memorial Day, Independence Day, Labor Day, Thanksgiving Day, and Christmas Day (6).

K. Holidays: New Year's Day, Presidents' Day, Memorial Day, Independence Day, Labor Day, Thanksgiving Day, Friday After Thanksgiving Day, The Day Before Christmas, And Christmas Day (9).

L. Holidays: New Year's Day, Martin Luther King Jr. Day, Memorial Day, Independence Day, Labor Day, Thanksgiving Day, Friday after Thanksgiving Day, And Christmas Day (8).

N. Holidays: New Year's Day, Presidents' Day, Memorial Day, Independence Day, Labor Day, Veterans' Day, Thanksgiving Day, The Friday After Thanksgiving Day, And Christmas Day (9).

P. Holidays: New Year's Day, Memorial Day, Independence Day, Labor Day, Thanksgiving Day, Friday And Saturday After Thanksgiving Day, The Day Before Christmas, And Christmas Day (9). If A Holiday Falls On Sunday, The Following Monday Shall Be Considered As A Holiday.

Q. Paid Holidays: New Year's Day, Memorial Day, Independence Day, Labor Day, Thanksgiving Day, and Christmas Day (6).

R. Paid Holidays: New Year's Day, Memorial Day, Independence Day, Labor Day, Thanksgiving Day, Day After Thanksgiving Day, One-Half Day Before Christmas Day, And Christmas Day. (7 1/2).

S. Paid Holidays: New Year's Day, Presidents' Day, Memorial Day, Independence Day, Labor Day, Thanksgiving Day, And Christmas Day (7).

Z. Holidays: New Year's Day, Memorial Day, Independence Day, Labor Day, Veterans Day, Thanksgiving Day, the Friday after Thanksgiving Day, And Christmas Day (8).

Holiday Codes Continued

6. G. Paid Holidays: New Year's Day, Martin Luther King Jr. Day, Presidents' Day, Memorial Day, Independence Day, Labor Day, Veterans' Day, Thanksgiving Day, the Friday after Thanksgiving Day, Christmas Day, and Christmas Eve Day (11).

H. Paid Holidays: New Year's Day, New Year's Eve Day, Memorial Day, Independence Day, Labor Day, Thanksgiving Day, Friday After Thanksgiving Day, Christmas Day, The Day After Christmas, And A Floating Holiday (10).

T. Paid Holidays: New Year's Day, Presidents' Day, Memorial Day, Independence Day, Labor Day, Thanksgiving Day, The Friday After Thanksgiving Day, The Last Working Day Before Christmas Day, And Christmas Day (9).

Z. Holidays: New Year's Day, Memorial Day, Independence Day, Labor Day, Thanksgiving Day, Friday after Thanksgiving Day, And Christmas Day (7). If a holiday falls on Saturday, the preceding Friday shall be considered as the holiday. If a holiday falls on Sunday, the following Monday shall be considered as the holiday.

Provided to Builders Exchange of WA, Inc. For usage Conditions Agreement see www.bxwa.com - Always Verify Scal

Holiday Codes Continued

7. A. Holidays: New Year's Day, Memorial Day, Independence Day, Labor Day, Thanksgiving Day, the Friday and Saturday after Thanksgiving Day, And Christmas Day (8). Any Holiday Which Falls On A Sunday Shall Be Observed As A Holiday On The Following Monday. If any of the listed holidays falls on a Saturday, the preceding Friday shall be a regular work day.

B. Holidays: New Year's Day, Memorial Day, Independence Day, Labor Day, Thanksgiving Day, the Friday and Saturday after Thanksgiving Day, And Christmas Day (8). Any holiday which falls on a Sunday shall be observed as a holiday on the following Monday. Any holiday which falls on a Saturday shall be observed as a holiday on the preceding Friday.

C. Holidays: New Year's Day, Martin Luther King Jr. Day, Memorial Day, Independence Day, Labor Day, Thanksgiving Day, the Friday after Thanksgiving Day, And Christmas Day (8). Any holiday which falls on a Sunday shall be observed as a holiday on the following Monday. Any holiday which falls on a Saturday shall be observed as a holiday on the preceding Friday.

D. Paid Holidays: New Year's Day, Memorial Day, Independence Day, Labor Day, Veteran's Day, Thanksgiving Day, the Friday after Thanksgiving Day, And Christmas Day (8). Unpaid Holidays: President's Day. Any paid holiday which falls on a Sunday shall be observed as a holiday on the following Monday. Any paid holiday which falls on a Saturday shall be observed as a holiday on the preceding Friday.

E. Holidays: New Year's Day, Memorial Day, Independence Day, Labor Day, Thanksgiving Day, the Friday after Thanksgiving Day, And Christmas Day (7). Any holiday which falls on a Sunday shall be observed as a holiday on the following Monday. Any holiday which falls on a Saturday shall be observed as a holiday on the preceding Friday.

F. Holidays: New Year's Day, Memorial Day, Independence Day, Labor Day, Thanksgiving Day, the Friday after Thanksgiving Day, the last working day before Christmas day and Christmas day (8). Any holiday which falls on a Sunday shall be observed as a holiday on the following Monday. Any holiday which falls on a Saturday shall be observed as a holiday on the preceding Friday.

Holiday Codes Continued

7. G. Holidays: New Year's Day, Memorial Day, Independence Day, Labor Day, Thanksgiving Day, and Christmas Day (6). Any holiday which falls on a Sunday shall be observed as a holiday on the following Monday.

H. Holidays: New Year's Day, Martin Luther King Jr. Day, Independence Day, Memorial Day, Labor Day, Thanksgiving Day, the Friday after Thanksgiving Day, the Last Working Day before Christmas Day and Christmas Day (9). Any holiday which falls on a Sunday shall be observed as a holiday on the following Monday. Any holiday which falls on a Saturday shall be observed as a holiday on the preceding Friday.

I. Holidays: New Year's Day, President's Day, Independence Day, Memorial Day, Labor Day, Thanksgiving Day, The Friday After Thanksgiving Day, The Day Before Christmas Day And Christmas Day (9). Any holiday which falls on a Sunday shall be observed as a holiday on the following Monday. Any holiday which falls on a Saturday shall be observed as a holiday on the preceding Friday.

J. Holidays: New Year's Day, Independence Day, Memorial Day, Labor Day, Thanksgiving Day and Christmas Day (6). Any holiday which falls on a Sunday shall be observed as a holiday on the following Monday. Any holiday which falls on a Saturday shall be observed as a holiday on the preceding Friday.

Provided to Builders Exchange of WA, Inc. For usage Conditions Agreement see www.bxwa.com - Always Verify Scal

Holiday Codes Continued

7. K. Holidays: New Year's Day, Memorial Day, Independence Day, Thanksgiving Day, the Friday and Saturday after Thanksgiving Day, And Christmas Day (8). Any holiday which falls on a Sunday shall be observed as a holiday on the following Monday. Any holiday which falls on a Saturday shall be observed as a holiday on the preceding Friday.

L. Holidays: New Year's Day, Memorial Day, Labor Day, Independence Day, Thanksgiving Day, the Last Work Day before Christmas Day, And Christmas Day (7). Any holiday which falls on a Sunday shall be observed as a holiday on the following Monday. Any holiday which falls on a Saturday shall be observed as a holiday on the preceding Friday.

N. Holidays: New Year's Day, Memorial Day, Independence Day, Labor Day, Thanksgiving Day, the Friday after Thanksgiving Day, And Christmas Day (7). Any holiday which falls on a Sunday shall be observed as a holiday on the following Monday. When Christmas falls on a Saturday, the preceding Friday shall be observed as a holiday.

P. Holidays: New Year's Day, Memorial Day, Independence Day, Labor Day, Thanksgiving Day, Friday after Thanksgiving Day, And Christmas Day (7). Any holiday which falls on a Sunday shall be observed as a holiday on the following Monday.

Q. Holidays: New Year's Day, Memorial Day, Independence Day, Labor Day, Thanksgiving Day, the Friday after Thanksgiving Day, the Last Working Day before Christmas Day and Christmas Day (8). Any holiday which falls on a Sunday shall be observed as a holiday on the following Monday. If any of the listed holidays falls on a Saturday, the preceding Friday shall be a regular work day.

S. Paid Holidays: New Year's Day, Memorial Day, Independence Day, Labor Day, Thanksgiving Day, Friday after Thanksgiving Day, Christmas Day, the Day after Christmas, and A Floating Holiday (9). If any of the listed holidays falls on a Sunday, the day observed by the Nation shall be considered a holiday and compensated accordingly.

V. Holidays: New Year's Day, President's Birthday, Memorial Day, Independence Day, Labor Day, Thanksgiving Day, the Friday after Thanksgiving Day, Christmas Day, the day before or after Christmas, and the day before or after New Year's Day. If any of the above listed holidays falls on a Sunday, the day observed by the Nation shall be considered a holiday and compensated accordingly.

W. Holidays: New Year's Day, Day After New Year's, Memorial Day, Independence Day, Labor Day, Thanksgiving Day, the Friday after Thanksgiving Day, Christmas Eve Day, Christmas Day, the day after Christmas, the day before New Year's Day, and a Floating Holiday.

X. Holidays: New Year's Day, Day before or after New Year's Day, Presidents' Day, Memorial Day, Independence Day, Labor Day, Thanksgiving Day, the Friday after Thanksgiving Day, Christmas Day, and the day before or after Christmas day. If a holiday falls on a Saturday or on a Friday that is the normal day off, then the holiday will be taken on the last normal workday. If the holiday falls on a Monday that is the normal day off or on a Sunday, then the holiday will be taken on the next normal workday.

Y. Holidays: New Year's Day, Presidents' Day, Memorial Day, Independence Day, Labor Day, Thanksgiving Day, the Friday after Thanksgiving Day, and Christmas Day. (8) If the holiday falls on a Sunday, then the day observed by the federal government shall be considered a holiday and compensated accordingly.

Z. Holidays: New Year's Day, Memorial Day, Independence Day, Labor Day, Thanksgiving Day, the Friday and Saturday after Thanksgiving Day, Christmas Eve, and Christmas Day (9). Any holiday which falls on a Saturday shall be observed as a holiday on the preceding Friday. Any holiday which falls on a Sunday shall be observed as a holiday on the following Monday.

Provided to Builders Exchange of WA, Inc. For usage Conditions Agreement see www.bxwa.com - Always Verify Scal

Holiday Codes Continued

15. G. New Year's Day, Washington's Birthday, Memorial Day, Independence Day, Labor Day, Thanksgiving Day, The Friday After Thanksgiving Day, the last scheduled workday before Christmas, and Christmas Day (9). If any of the listed holidays falls on a Sunday, the day observed by the Nation shall be considered a holiday and compensated accordingly.

H. Holidays: New Year's Day, Martin Luther King Jr. Day, Independence Day, Memorial Day, Labor Day, Thanksgiving Day, the Friday after Thanksgiving Day, the Last Working Day before Christmas Day and Christmas Day (9). Any holiday which falls on a Sunday shall be observed as a holiday on the following Monday. Any holiday which falls on a Saturday shall be observed as a holiday on the preceding Friday.

I. Holidays: New Year's Day, President's Day, Independence Day, Memorial Day, Labor Day, Thanksgiving Day, The Friday After Thanksgiving Day, The Day Before Christmas Day And Christmas Day (9). Any holiday which falls on a Sunday shall be observed as a holiday on the following Monday. Any holiday which falls on a Saturday shall be observed as a holiday on the preceding Friday.

J. Holidays: New Year's Day, Martin Luther King Jr. Day, Memorial Day, Independence Day, Labor Day, Thanksgiving Day, the Friday and Saturday after Thanksgiving Day, and Christmas Day (9). Any holiday which falls on a Sunday shall be observed as a holiday on the following Monday. If any of the listed holidays falls on a Saturday, the preceding Friday shall be a regular work day.

K. Holidays: New Year's Day, Memorial Day, Independence Day, Thanksgiving Day, the Friday and Saturday after Thanksgiving Day, And Christmas Day (8). Any holiday which falls on a Sunday shall be observed as a holiday on the following Monday. Any holiday which falls on a Saturday shall be observed as a holiday on the preceding Friday.

L. Holidays: New Year's Day, Memorial Day, Independence Day, Labor Day, Veteran's Day, Thanksgiving Day, the Friday after Thanksgiving Day, and Christmas Day (8). Any holiday which falls on a Sunday shall be observed as a holiday on the following Monday. If any of the listed holidays falls on a Saturday, the preceding Friday shall be a regular work day.

M. Holidays: New Year's Day, Martin Luther King Jr. Day, Independence Day, Memorial Day, Labor Day, Thanksgiving Day, the Friday after Thanksgiving Day, Christmas Eve Day and Christmas Day (9). Any holiday which falls on a Sunday shall be observed as a holiday on the following Monday. If any of the listed holidays falls on a Saturday, the preceding Friday shall be a regular work day.

N. Holidays: New Year's Day, Memorial Day, Independence Day, Labor Day, Veteran's Day, Thanksgiving Day, the Friday after Thanksgiving Day, and Christmas Day (8). Any holiday which falls on a Sunday shall be observed as a holiday on the following Monday.

O. Holidays: New Year's Day, Martin Luther King Jr. Day, Memorial Day, Independence Day, Labor Day, Thanksgiving Day, the Friday and Saturday after Thanksgiving Day, the day before Christmas day, and Christmas Day (10). Any holiday which falls on a Sunday shall be observed as a holiday on the following Monday.

Provided to Builders Exchange of WA, Inc. For usage Conditions Agreement see www.bxwa.com - Always Verify Scal

Note Codes

8. D. Workers working with supplied air on hazmat projects receive an additional $1.00 per hour.

L. Workers on hazmat projects receive additional hourly premiums as follows -Level A: $0.75, Level B: $0.50, And Level C: $0.25.

M. Workers on hazmat projects receive additional hourly premiums as follows: Levels A & B: $1.00, Levels C & D: $0.50.

N. Workers on hazmat projects receive additional hourly premiums as follows -Level A: $1.00, Level B: $0.75, Level C: $0.50, And Level D: $0.25.

S. Effective August 31, 2012 – A Traffic Control Supervisor shall be present on the project whenever flagging or spotting or other traffic control labor is being utilized. Flaggers and Spotters shall be posted where shown on approved Traffic Control Plans or where directed by the Engineer. All flaggers and spotters shall possess a current flagging card issued by the State of Washington, Oregon, Montana, or Idaho. This classification is only effective on or after August 31, 2012.

T. Effective August 31, 2012 – A Traffic Control Laborer performs the setup, maintenance and removal of all temporary traffic control devices and construction signs necessary to control vehicular, bicycle, and pedestrian traffic during construction operations. Flaggers and Spotters shall be posted where shown on approved Traffic Control Plans or where directed by the Engineer. All flaggers and spotters shall possess a current flagging card issued by the State of Washington, Oregon, Montana, or Idaho. This classification is only effective on or after August 31, 2012.

U. Workers on hazmat projects receive additional hourly premiums as follows – Class A Suit: $2.00, Class B Suit: $1.50, And Class C Suit: $1.00. Workers performing underground work receive an additional $0.40 per hour for any and all work performed underground, including operating, servicing and repairing of equipment. The premium for underground work shall be paid for the entire shift worked. Workers who work suspended by a rope or cable receive an additional $0.50 per hour. The premium for work suspended shall be paid for the entire shift worked. Workers who do “pioneer” work (break open a cut, build road, etc.) more than one hundred fifty (150) feet above grade elevation receive an additional $0.50 per hour.

8. V. In addition to the hourly wage and fringe benefits, the following depth and enclosure premiums shall be paid. The premiums are to be calculated for the maximum depth and distance into an enclosure that a diver reaches in a day. The premiums are to be paid one time for the day and are not used in calculating overtime pay.

Depth premiums apply to depths of fifty feet or more. Over 50' to 100' - $2.00 per foot for each foot over 50 feet. Over 101' to 150' - $3.00 per foot for each foot over 101 feet. Over 151' to 220' - $4.00 per foot for each foot over 220 feet. Over 221' - $5.00 per foot for each foot over 221 feet.

Enclosure premiums apply when divers enter enclosures (such as pipes or tunnels) where there is no vertical ascent and is measured by the distance travelled from the entrance. 25’ to 300’ - $1.00 per foot from entrance. 300’ to 600’ - $1.50 per foot beginning at 300’. Over 600’ - $2.00 per foot beginning at 600’.

W. Meter Installers work on single phase 120/240V self-contained residential meters. The Lineman/Groundmen rates would apply to meters not fitting this description.

Provided to Builders Exchange of WA, Inc. For usage Conditions Agreement see www.bxwa.com - Always Verify Scal

Note Codes Continued

X. Workers on hazmat projects receive additional hourly premiums as follows - Class A Suit: $2.00, Class B Suit: $1.50, Class C Suit: $1.00, and Class D Suit: $0.50. Special Shift Premium: Basic hourly rate plus $2.00 per hour.

When due to conditions beyond the control of the Employer or when an owner (not acting as the contractor), a government agency or the contract specifications requires that work can only be performed outside the normal 5 am to 6pm shift, then the special shift premium will be applied to the basic hourly rate. When an employee works on a special shift, they shall be paid a special shift premium for each hour worked unless they are in OT or Double-time status. (For example, the special shift premium does not waive the overtime requirements for work performed on Saturday or Sunday.)

Y. Tide Work: When employees are called out between the hours of 6:00 p.m. and 6:00 a.m. to work on tide work (work located in the tide plane) all time worked shall be at one and one-half times the hourly rate of pay.

Swinging Stage/Boatswains Chair: Employees working on a swinging state or boatswains chair or under conditions that require them to be tied off to allow their hands to be free shall receive seventy-five cents ($0.75) per hour above the classification rate.

Z. Workers working with supplied air on hazmat projects receive an additional $1.00 per hour.

Special Shift Premium: Basic hourly rate plus $2.00 per hour. When due to conditions beyond the control of the Employer or when an owner (not acting as a contractor), a government agency or the contract specifications require that more than (4) hours of a special shift can only be performed outside the normal 6 am to 6pm shift, then the special shift premium will be applied to the basic straight time for the entire shift. When an employee works on a special shift, they will be paid a special shift premium for each hour worked unless they are in overtime or double-time status. (For example, the special shift premium does not waive the overtime requirements for work performed on Saturday or Sunday.)

Note Codes Continued

9. A. Workers working with supplied air on hazmat projects receive an additional $1.00 per hour.

Special Shift Premium: Basic hourly rate plus $2.00 per hour. When due to conditions beyond the control of the Employer or when an owner (not acting as the contractor), a government agency or the contract specifications require that more than four (4) hours of a special shift can only be performed outside the normal 6 am to 6pm shift, then the special shift premium will be applied to the basic straight time for the entire shift. When an employee works on a special shift, they shall be paid a special shift premium for each hour worked unless they are in overtime or double-time status. (For example, the special shift premium does not waive the overtime requirements for work performed on Saturday or Sunday.)

Certified Crane Operator Premium: Crane operators requiring certifications shall be paid $0.50 per hour above their classification rate.

Boom Pay Premium: All cranes including tower shall be paid as follows based on boom length:

(A) – 130’ to 199’ – $0.50 per hour over their classification rate.
(B) – 200’ to 299’ – $0.80 per hour over their classification rate.
(C) – 300’ and over – $1.00 per hour over their classification rate.

Provided to Builders Exchange of WA, Inc. For usage Conditions Agreement see www.bxwa.com - Always Verify Scal

Note Codes Continued

9. B. The highest pressure registered on the gauge for an accumulated time of more than fifteen (15) minutes during the shift shall be used in determining the scale paid.

Tide Work: When employees are called out between the hours of 6:00 p.m. and 6:00 a.m. to work on tide work (work located in the tide plane) all time worked shall be at one and one-half times the hourly rate of pay. Swinging Stage/Boatswains Chair: Employees working on a swinging stage or boatswains chair or under conditions that require them to be tied off to allow their hands to be free shall receive seventy-five cents ($0.75) per hour above the classification rate.

C. Tide Work: When employees are called out between the hours of 6:00 p.m. and 6:00 a.m. to work on tide work (work located in the tide plane) all time worked shall be at one and one-half times the hourly rate of pay. Swinging Stage/Boatswains Chair: Employees working on a swinging stage or boatswains chair or under conditions that require them to be tied off to allow their hands to be free shall receive seventy-five cents ($0.75) per hour above the classification rate.

Effective August 31, 2012 – A Traffic Control Supervisor shall be present on the project whenever flagging or spotting or other traffic control labor is being utilized. A Traffic Control Laborer performs the setup, maintenance and removal of all temporary traffic control devices and construction signs necessary to control vehicular, bicycle, and pedestrian traffic during construction operations. Flaggers and Spotters shall be posted where shown on approved Traffic Control Plans or where directed by the Engineer. All flaggers and spotters shall possess a current flagging card issued by the State of Washington, Oregon, Montana, or Idaho. These classifications are only effective on or after August 31, 2012.

D. Industrial Painter wages are required for painting within industrial facilities such as treatment plants, pipelines, towers, dams, bridges, power generation facilities and manufacturing facilities such as chemical plants, etc., or anywhere abrasive blasting is necessary to prepare surfaces, or hazardous materials encapsulation is required.

E. Heavy Construction includes construction, repair, alteration or additions to the production, fabrication or manufacturing portions of industrial or manufacturing plants, hydroelectric or nuclear power plants and atomic reactor construction. Workers on hazmat projects receive additional hourly premiums as follows -Level A: $1.00, Level B: $0.75, Level C: $0.50, And Level D: $0.25.

F. Industrial Painter wages are required for painting within industrial facilities such as treatment plants, pipelines, towers, dams, power generation facilities and manufacturing facilities such as chemical plants, etc., or anywhere abrasive blasting is necessary to prepare surfaces, or hazardous materials encapsulation is required.

H. One (1) person crew shall consist of a Party Chief. (Total Station or similar one (1) person survey system). Two (2) person survey party shall consist of a least a Party Chief and a Chain Person. Three (3) person survey party shall consist of at least a Party Chief, an Instrument Person, and a Chain Person.

Provided to Builders Exchange of WA, Inc. For usage Conditions Agreement see www.bxwa.com - Always Verify Scal

9. I. In addition to the hourly wage and fringe benefits, the following depth and enclosure premiums shall be paid. The premiums are to be calculated for the maximum depth and distance into an enclosure that a diver reaches in a day. The premiums are to be paid one time for the day and are not used in calculating overtime pay.

Depth premiums apply to depths of fifty feet or more. Over 50' to 100' - $2.00 per foot for each foot over 50 feet. Over 101' to 150' - $3.00 per foot for each foot over 101 feet. Over 151' to 220' - $4.00 per foot for each foot over 220 feet. Over 221' - $5.00 per foot for each foot over 221 feet.

Enclosure premiums apply when divers enter enclosures (such as pipes or tunnels) where there is no vertical ascent and is measured by the distance travelled from the entrance. 25’ to 300’ - $1.00 per foot from entrance. 300’ to 600’ - $1.50 per foot beginning at 300’. Over 600’ - $2.00 per foot beginning at 600’.

Employees may be required to perform any combination of work within the Diving team/crew, (with the exception of dive Supervisor) provided they are paid at the highest rate at which he/she has worked for the shift.

L. Workers on hazmat projects receive additional hourly premiums as follows -Level A: $0.75, Level B: $0.50, And Level C: $0.25.

Tide Work: When employees are called out between the hours of 6:00 p.m. and 6:00 a.m. to work on tide work (work located in the tide plane) all time worked shall be at one and one-half times the hourly rate of pay.

Swinging Stage/Boatswains Chair: Employees working on a swinging stage or boatswains chair or under conditions that require them to be tied off to allow their hands to be free shall receive seventy-five cents ($0.75) per hour above the classification rate.

Provided to Builders Exchange of WA, Inc. For usage Conditions Agreement see www.bxwa.com - Always Verify Scal

APPENDIX B
IN-ROADWAY WARNING LIGHT DETAILS

Provided to Builders Exchange of WA, Inc. For usage Conditions Agreement see www.bxwa.com - Always Verify Scal

LIGHTGUARD SYSTEMS®

Part Number: LGS-M12

Description: In Roadway Warning Light (IRWL) fixture in a stainless steel housing with flashing amber LED and non-flashing white Surface Mount Pedestrian Luminaire (SMPL™) LED

Features/Benefits:

- Most effective traffic calming measure
- High-intensity flashing amber LEDs
- SMPL™ white pedestrian luminaire
- Ruggedized stainless steel exterior
- Moisture-resistant design
- Visible up to 1,000 feet
- Easily mounts to in-roadway baseplate
- 12 VDC operation
- MUTCD Ch. 4, Sec. N compliant

Application Notes:

The amber LEDs flash towards the motorist at the highly visible enhanced Enlighten1™ rate, which is photosensitive epilepsy safe. The white LEDs illuminate the pedestrian in the crosswalk and energize simultaneously with the amber LEDs in a continuous non-flashing solid white for the cross-time duration.

Once activated, the amber LED portion of the light fixture flashes, warning motorists up to 1,000 feet in advance. The white LED SMPL™ portion of the light fixture also simultaneously energizes time selectable activation at nighttime.

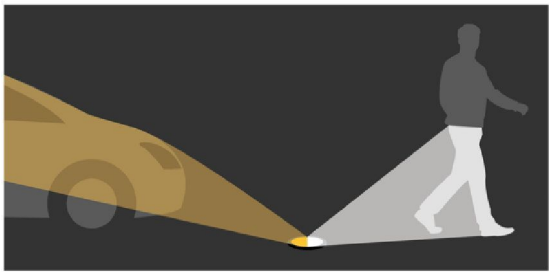

M12 IRWL simultaneously warns motorists and illuminates pedestrians at nighttime

The light fixture contains custom-engineered optics for precise focused light output using high-intensity LEDs. The fixture fits tightly into protective base plate models LGS-SD10-C and LGS-CHS-14 & fastens using stainless steel 1/4"-20 screws with thread locks and factory applied anti-seize compound.

IRWL alert motorists of pedestrians inside, or about to enter the crosswalks, and are used at mid-block and other uncontrolled public and private crossings. Activation methods are push button, passive detection bollard, or motion activated sensor.

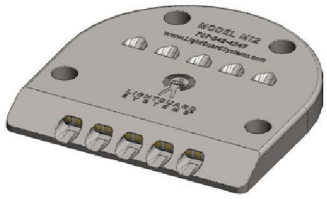

New Stainless Steel Exterior



Low Profile Design

Pursuant to MUTCD Sec. 4N.05 & .06, IRWL are installed in the center of each traffic lane, at the center line of the roadway, at each edge of the roadway or parking lane(s), or at other suitable locations away from observed tire track paths. Placement within lanes should be based on engineering best judgement. See our published installation layouts.

General Performance Specifications

Parameter	*Flashing Amber LEDs*	*No Flash White LEDs*	*Typical Mounting to Baseplate*
Visibility	30° viewing angle (± 15°)		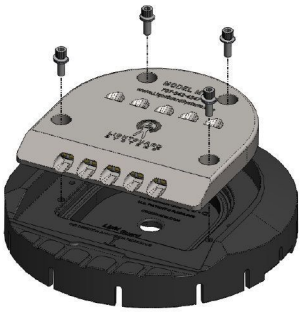
Light Intensity	118cd; visible up to 1 mile	2.3 ft. candle @ 5 ft.	
Operating Temp	-20° to 50°C		
Operating Voltage	12VDC to 14VDC		
DC Current @ 12 VDC	<0.2 A nominal	<0.2 A nominal	
Avg Power Dissipation	2.5 W max	2.5 W max	
Housing material	Stainless Steel		
Housing color	Clear		
LED color	Amber, 595 nm (Also available with red & white LEDs)	White 4000 k	

Usage Notes and Limitations: The LGS IRWL is designed to operate in a pulsed manner for compliance with MUTCD Chapter 4N. MUTCD states that steadily illuminated lights installed in the roadway surface are considered to be Internally Illuminated Raised Pavement Markers (IIRPM). When any LGS IRWL are used as IIRPM instead of IRWL, the manufacturer's warranty will not apply. Additionally, if customers operate any LGS IRWL as IIRPM, the drive voltage should be controlled/reduced so as to limit the current/power consumed (with commensurate reduced brightness) to mitigate the risk of higher thermally induced failure rates.

2292 Airport Blvd., Santa Rosa, CA 95403 | P: (707) 542-4547 | F: (707) 525-6333 | www.lightguardsystems.com
SMPL™ is U.S. patent pending. ©2025 LightGuard Systems, Inc. All Rights Reserved.

Provided to Builders Exchange of WA, Inc. For usage Conditions Agreement see www.bxwa.com - Always Verify Scal

Visual Supplement
In-Roadway Warning Light (IRWL)
ASPHALT Installation



2292 Airport Blvd., Santa Rosa, CA 95403 | P: (707) 542-4547 | F: (707) 525-6333 | www.lightguardsystems.com
©2020 LightGuard Systems, Inc. All Rights Reserved. 3/24/2020

Provided to Builders Exchange of WA, Inc. For usage Conditions Agreement see www.bxwa.com - Always Verify Scal

Step 1 Determine placement and site angles of in-roadway warning signals to intersect at optimum driver viewing zone as specified by Signal Alignment Diagram (See Section 3.7.1). Signal assemblies can be manually aimed, but laser site method is optimal.

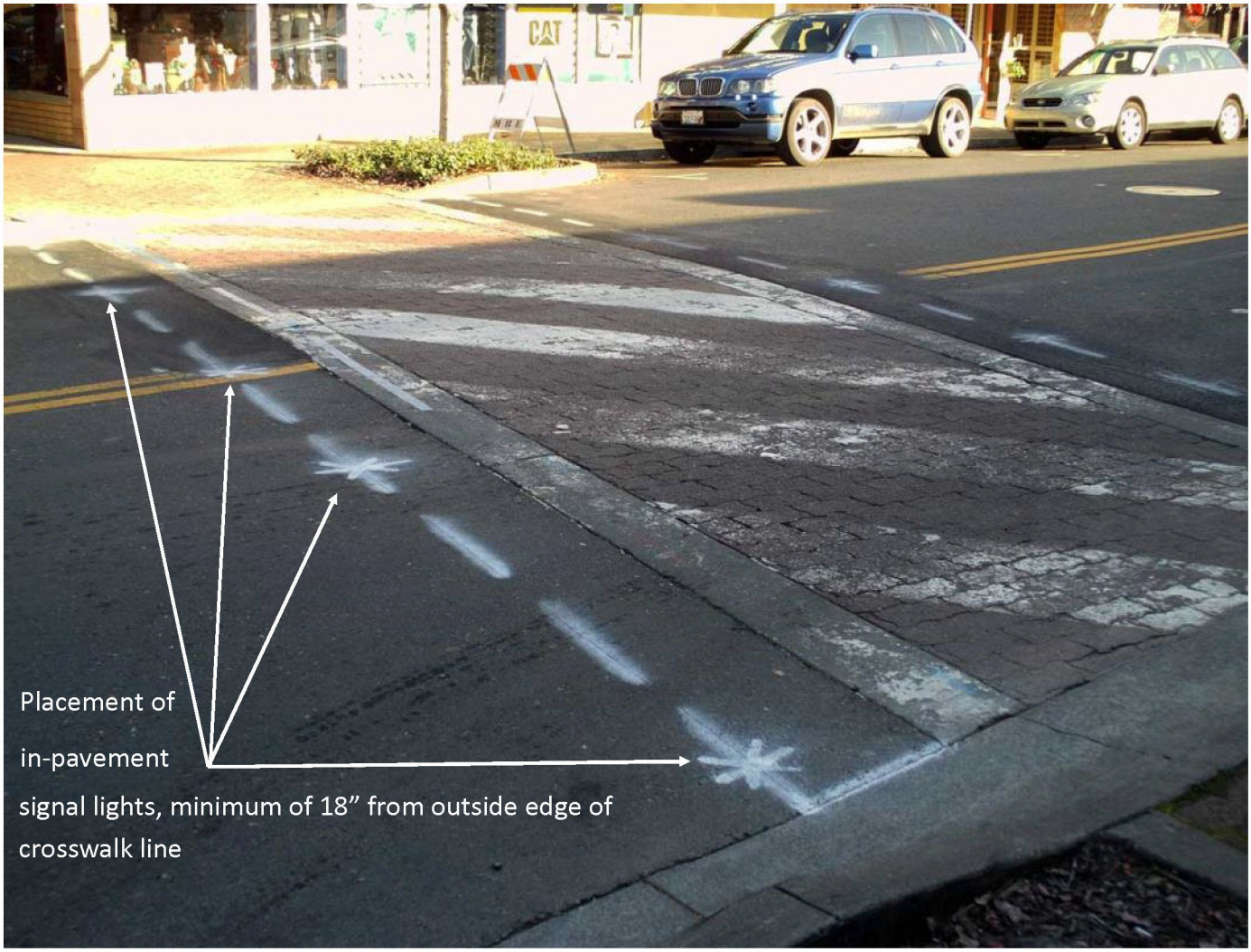

Below is a typical mid-block crosswalk with 7 in-pavement signal lights on each side. The "Zone of Convergence" is the area in the traffic lanes where the signal light lenses are aimed towards approaching motorist. The signal lights will merge at the eye level of the approaching driver. This "Zone" is typically located 200 - 400 feet from the crosswalk zone (See Installation Manual Section 3.7)

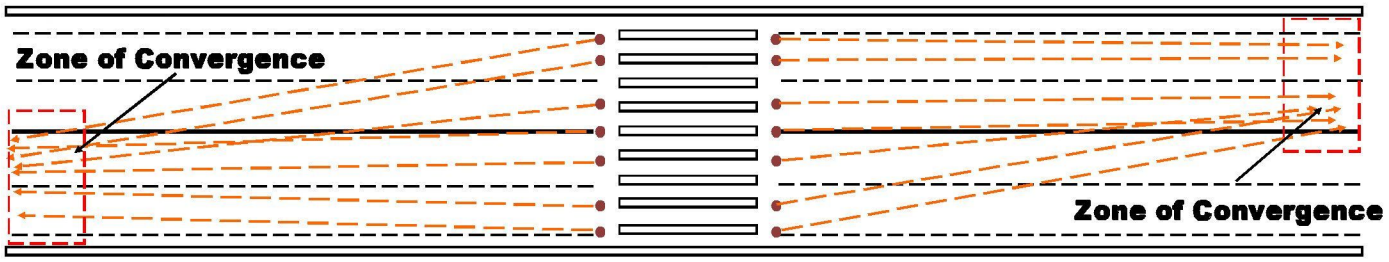

Provided to Builders Exchange of WA, Inc. For usage Conditions Agreement see www.bxwa.com - Always Verify Scal

Step 2

Perform saw cuts using pavement cutting device in accordance with predetermined layout to facilitate hook-ups through bottom of base plate to terminal connection points. Cuts to be ⅜ to ½ inch width in accordance with the CA Standard Plan ES-5A, or local standards, with a depth of 2 – 2½ inches for direct burial of wire. (See Installation Manual Sections 3.5.1 and 3.5.2





Step 3

Provide depression cut-out for base plates approximately 1⅜ inch (+/- 1/8 inch) inch deep on concrete or asphalt. Depression cut-out should only be slightly larger than base plate. Depression cut-outs should be level, or even, to conform to the existing approach grade of the road-way.



Step 4

If required, dig out for traffic electric hand hole boxes and install boxes for wiring access points at predeter-mined locations in accordance with the CA Standard Plan ES-5E, or local standards.





Provided to Builders Exchange of WA, Inc. For usage Conditions Agreement see www.bxwa.com - Always Verify Scal

Step 5

Install all necessary wire to predetermined connection points and lay in cleared roadway cuts. (See Installation Manual Section 3.6). Place material on top of the wires into the saw cut at the core drill entrance area to hold down the wires & simultaneously plug (see picture to right) the core drill area to prevent flow of epoxy back into the saw cut.

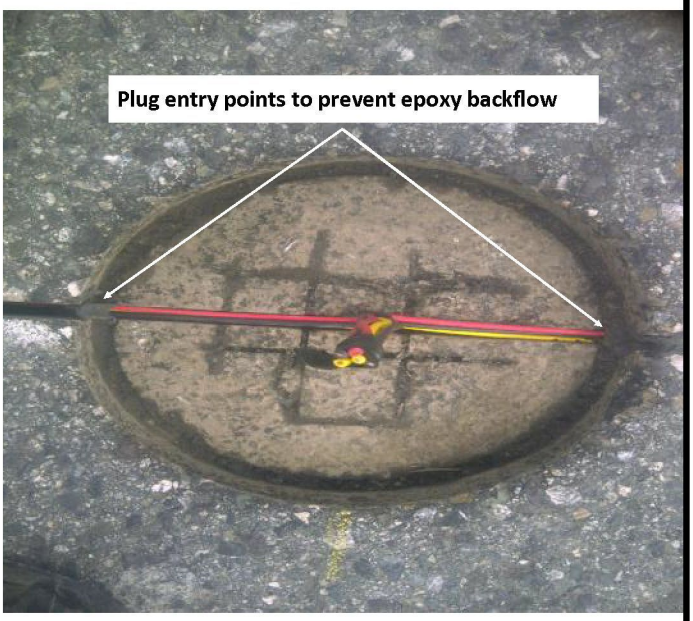

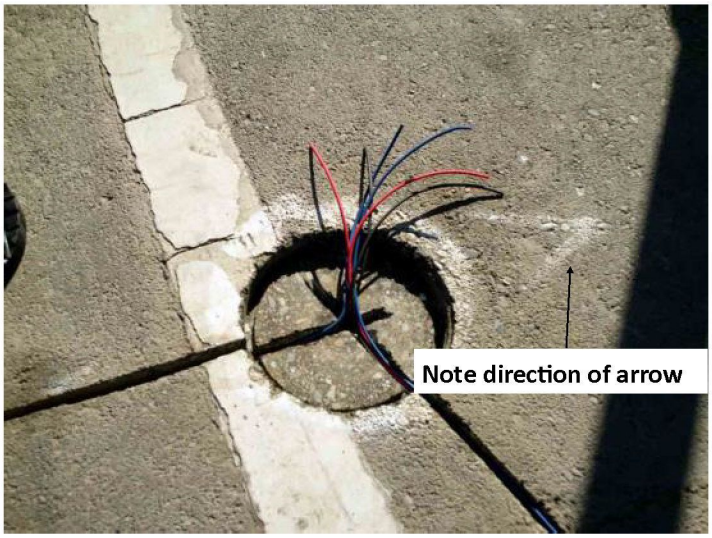

Step 6

Check for proper site distance angles and level depth of base plate (See Installation Manual Sections 3.7, 3.5 and 3.2.4). Mark alignment on roadway for base plate focus direction. Top of base plate (circumferential edge as is shown in the Installation Manual, section 3.5.1) should be flush or slightly below (less than .10 inch) roadway surface AND free from excess adhesive (See Installation Manual Section 3.5).

Bored hole depression has been completely cleared of debris and is ready for mixed epoxy pour.



Provided to Builders Exchange of WA, Inc. For usage Conditions Agreement see www.bxwa.com - Always Verify Scal

Step 7

Mix only enough 2-part epoxy (BONDO 7084) for 2 to 3 base plates, since Epoxy working life is approximately 10 minutes. Surfaces should be cleaned of dirt or debris, and dry before applying adhesive. Ensure that wires are vertical in the center of the depression cut. Pour epoxy into depression cut (approximately ¼" depth). Pull wire through center hole in base plate. Minimize the amount of epoxy that flows into the base plate. Secure base plates to roadway surface by pressing the base plate into the epoxy in the depression cut.

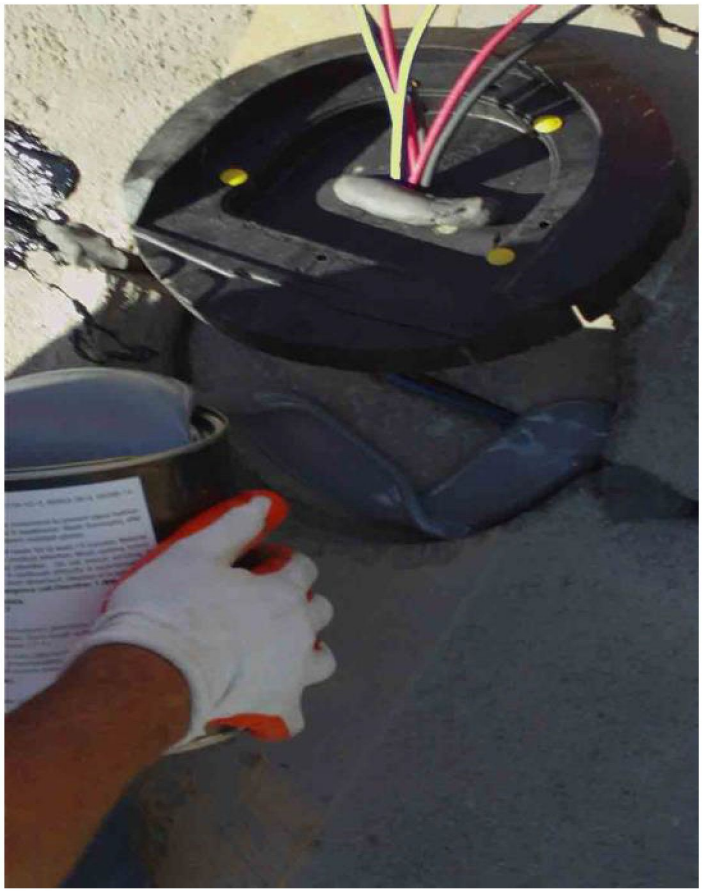

Ensure that epoxy flows around the outside diameter of the base plate and slightly around the wires emerging from the center hole of the base plate, but DOES NOT flow into the base plate. Ensure that epoxy fills outside diameter of base plate up to grade level. Ensure that the base plate is aligned with the mark made in step 6 (See Installation Manual Section 3.5) and is aimed correctly both horizontally and vertically toward the zone of convergence *prior to epoxy curing*. Allow minimum of 30 minutes of epoxy cure time prior to moving wires for connecting pigtail gel plugs (Sec. 3.6).



Step 8

Allow minimum of 1 hour cure time (above 70°F & 2 hours if colder temperatures), and be certain that the bondo is fully cured before opening traffic lanes to vehicles travelling over recently epoxied base plates. Signal heads can be secured to base plates as soon as epoxy has sufficiently hardened. *NOTE: Temperature is critical.*

Provided to Builders Exchange of WA, Inc. For usage Conditions Agreement see www.bxwa.com - Always Verify Scal

Step 9

Secure in-roadway warning signal to base plates using socket head cap screws using Allen Wrench or equivalent (See Installation Manual Section 3.4). Socket head cap screws are to be coated with anti-seize compound for maintenance purposes to ensure that screws can be removed after exposure to the environment & additionally contain an embedded nylon thread-lock bead to prevent the screws from backing out while exposed to the roadway environment.



Finished and Properly Installed In-Pavement Signal Light

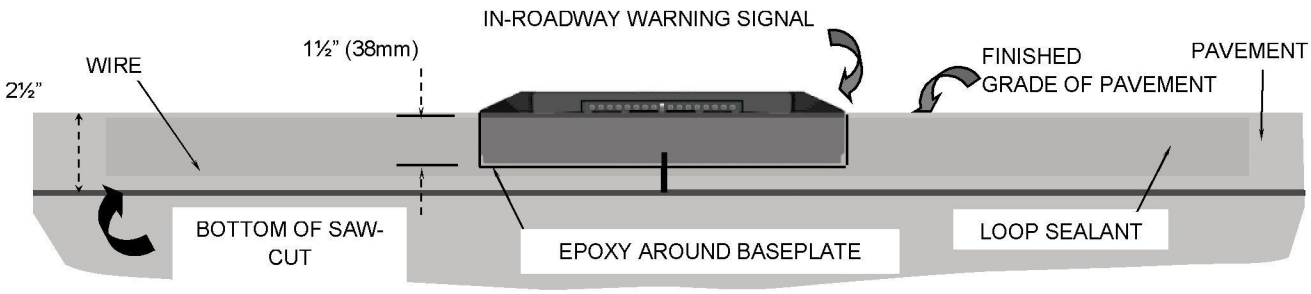

Provided to Builders Exchange of WA, Inc. For usage Conditions Agreement see www.bxwa.com - Always Verify Scal

IRWL SIGNAL AND BASE PLATE INSTALLATION GUIDELINES

NOTE: *Correct Placement of Bases is CRITICAL to System Performance*

Step 1 - Determine placement and site angles of in-roadway warning signals to intersect at optimum driver viewing zone as specified by Signal Alignment Diagram (See Section 3.7.1). Signal assemblies can be manually aimed, but laser site method is optimal.

Step 2 - Perform saw cuts using pavement cutting device in accordance with predetermined layout to facilitate hook-ups through bottom of base plate to terminal connection points. Cuts to be ⅜ to ½ inch width in accordance with the CA Standard Plan ES-5A, or local standards, with a depth of 2 – 2½ inches for direct burial of wire. (See Installation Manual Sections 3.5.1 and 3.5.2

Step 3 - Provide depression cut-out for base plates approximately 1⅜ inch (+/- 1/8 inch) inch deep on concrete or asphalt. Depression cut-out should only be slightly larger than base plate. Depression cut-outs should be level, or even, to conform to the existing approach grade of the roadway.

Step 4 - If required, dig out for traffic electric hand hole boxes and install boxes for wiring access points at predetermined locations in accordance with the CA Standard Plan ES-5E, or local standards.

Step 5 - Install all necessary wire to predetermined connection points and lay in cleared roadway cuts. (See Installation Manual Section 3.6). Place material on top of the wires into the saw cut at the core drill entrance area to hold down the wires & simultaneously plug the core drill area to prevent flow of epoxy back into the saw cut.

Step 6 - Check for proper site distance angles and level depth of base plate (See Installation Manual Sections 3.7, 3.5 and 3.2.4). Mark alignment on roadway for base plate focus direction. Top of base plate (circumferential edge shown in section 3.5.1) should be flush or slightly below (less than .10 inch) roadway surface AND free from excess adhesive (See Installation Manual Section 3.5).

Step 7 - Mix only enough 2-part epoxy (BONDO 7084) for 2 to 3 base plates, since Epoxy working life is approximately 10 minutes. Surfaces should be cleaned of dirt or debris, and dry before applying adhesive. Ensure that wires are vertical in the center of the depression cut. Pour epoxy into depression cut (approximately ¼" depth). Pull wire through center hole in base plate. Minimize the amount of epoxy that flows into the base plate. Secure base plates to roadway surface by pressing the base plate into the epoxy in the depression cut.

Ensure that epoxy flows around the outside diameter of the base plate and slightly around the wires emerging from the center hole of the base plate, but DOES NOT flow into the base plate. Ensure that epoxy fills outside diameter of base plate up to grade level. Ensure that the base plate is aligned with the mark made in step 6 above; (See Installation Manual Section 3.5) and is aimed correctly both horizontally and vertically toward the zone of convergence *prior to epoxy curing*. Allow minimum of 30 minutes of epoxy cure time prior to moving wires for connecting pigtail gel plugs (Sec. 3.6 of the Installation Manual).

Step 8 - Allow minimum of 1 hour cure time (above 70°F & 2 hours if colder temperatures), be certain that the bondo is fully cured before opening traffic lanes to vehicles travelling over recently epoxied base plates. Signal heads can be secured to base plates as soon as epoxy has sufficiently hardened. *NOTE: Temperature is critical.*

Step 9 - Secure in-roadway warning signal to base plates using socket head cap screws using Allen Wrench or equivalent (See Installation Manual Section 3.4). Socket head cap screws are to be coated with anti-seize compound for maintenance purposes to ensure that screws can be removed after exposure to the environment & additionally contain an embedded nylon thread-lock bead to prevent the screws from backing out while exposed to the roadway environment.

Provided to Builders Exchange of WA, Inc. For usage Conditions Agreement see www.bxwa.com - Always Verify Scal

APPENDIX C
STANDARD PLANS

Provided to Builders Exchange of WA, Inc. For usage Conditions Agreement see www.bxwa.com - Always Verify Scal

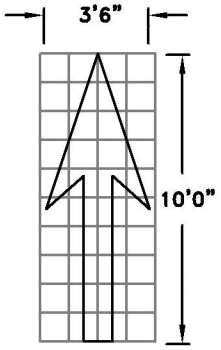

12 INCH GRID

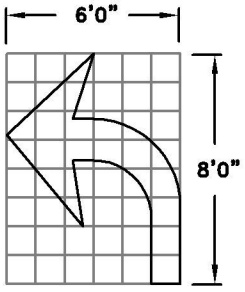

12 INCH GRID

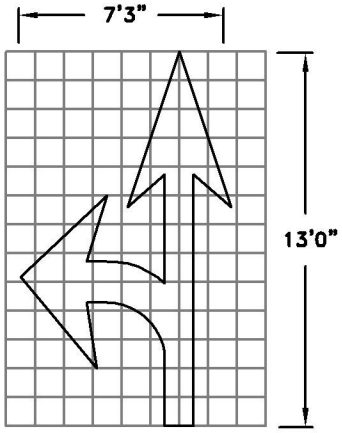

12 INCH GRID

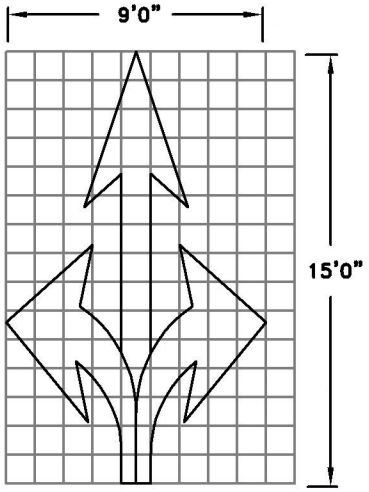

12 INCH GRID

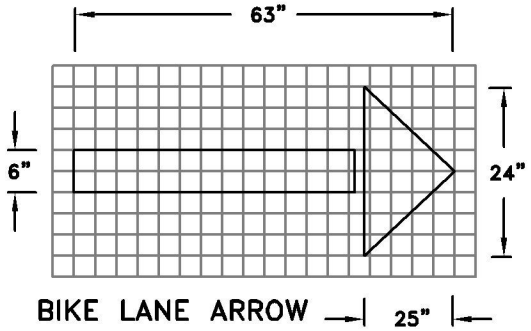

BIKE LANE ARROW 25"

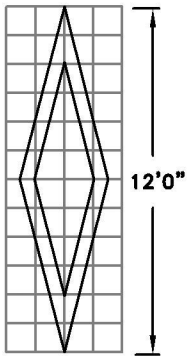

12 INCH GRID
DIAMOND SYMBOL

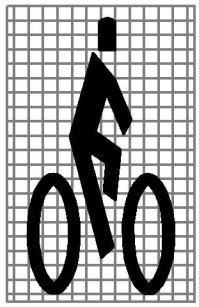

BSF SYMBOL



BSC SYMBOL

COMPLETE WORD STENCILS

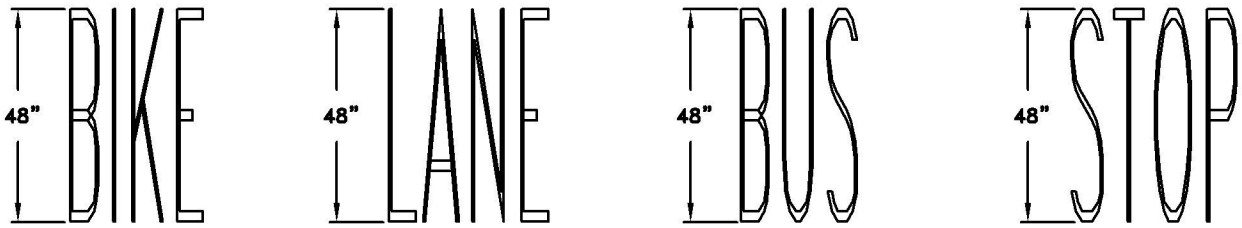

GENERAL NOTES:

1. ALL PAVEMENT MARKINGS SHALL BE THERMOPLASTIC OR METHACRYLIC RESIN.
2. ALL MARKINGS SHALL MEET FEDERAL METRIC STANDARDS.

City of Stanwood		TRANSPORTATION STANDARD DETAIL
		PAVEMENT MARKINGS
File: STADETT10 | Revised: OCT 14, 2003 | Printed: OCT 14, 2003		DRAWING NO. T-10

Provided to Builders Exchange of WA, Inc. For usage conditions Agreement see www.bxwa.com - Always Verify Scal

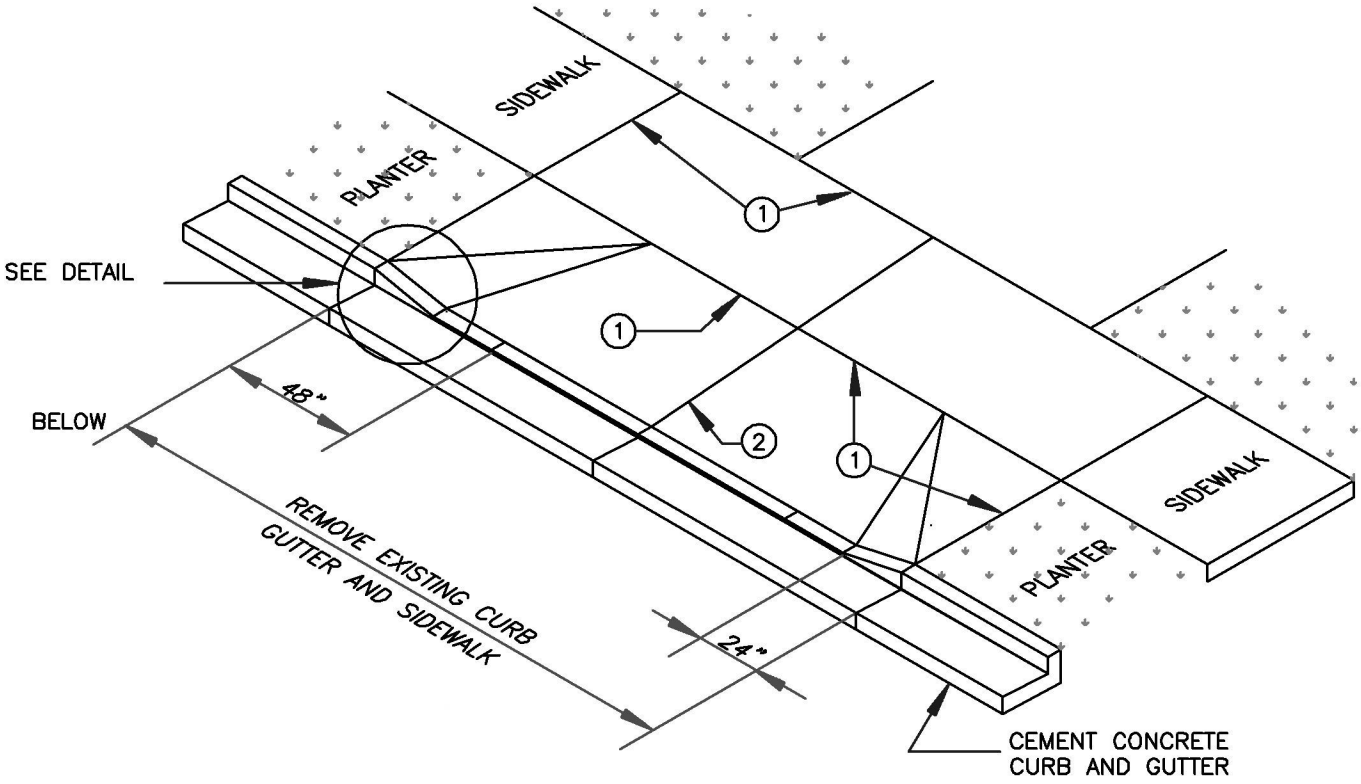

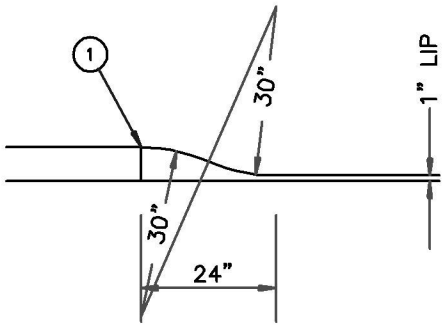

DROP CURB TRANSITION DETAIL

NOTES:

1. FULL DEPTH EXPANSION JOINT, 3/8" MINIMUM THICKNESS.
2. FULL DEPTH EXPANSION JOINT, 3/8" MINIMUM THICKNESS IF WIDTH OF DRIVEWAY IS 15 FEET OR GREATER.
3. DRIVEWAY SECTION WITHIN PUBLIC RIGHT-OF-WAY IS TO BE SURFACED WITH ASPHALT OR CONCRETE.
4. DRIVEWAY CEMENT CONCRETE DEPTH SHALL BE A MINIMUM OF 6" AND PLACED ON COMPACTED GRADE.
5. CONCRETE SHALL BE COMMERCIAL CLASS CONCRETE PER WSDOT/APWA SPECIFICATIONS.
6. CLEAN AND EDGE ALL JOINTS.

City of Stanwood			TRANSPORTATION STANDARD DETAIL	
			DROP CURB DRIVEWAY ENTRANCE	
File: STADETT18	Revised:MAY 1, 2006	Printed:MAY 1, 2006	DRAWING NO.	T-18

Provided to Builders Exchange of WA, Inc. For usage Conditions Agreement see www.bxwa.com - Always Verify Scal

DRAWN BY: FERN LIDDELL

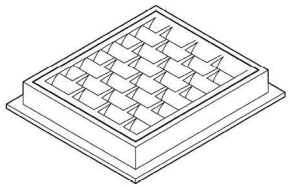

FRAME AND VANED GRATE

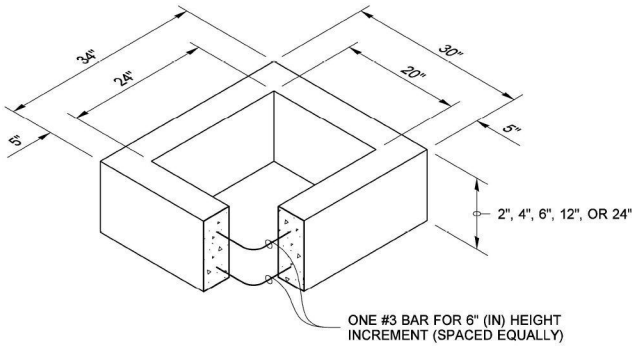

RECTANGULAR ADJUSTMENT SECTION

PIPE ALLOWANCES	
PIPE MATERIAL	**MAXIMUM INSIDE DIAMETER (INCHES)**
REINFORCED OR PLAIN CONCRETE	12"
ALL METAL PIPE	15"
CPSSP * **(STD. SPEC. SECT. 9-05.20)**	12"
SOLID WALL PVC **(STD. SPEC. SECT. 9-05.12(1))**	15"
PROFILE WALL PVC **(STD. SPEC. SECT. 9-05.12(2))**	15"

* CORRUGATED POLYETHYLENE STORM SEWER PIPE

NOTES

1. As acceptable alternatives to the rebar shown in the **PRECAST BASE SECTION**, fibers (placed according to the Standard Specifications), or wire mesh having a minimum area of 0.12 square inches per foot shall be used with the minimum required rebar shown in the **ALTERNATIVE PRECAST BASE SECTION**. Wire mesh shall not be placed in the knockouts.
2. The knockout diameter shall not be greater than 20" (in). Knockouts shall have a wall thickness of 2" (in) minimum to 2.5" (in) maximum. Provide a 1.5" (in) minimum gap between the knockout wall and the outside of the pipe. After the pipe is installed, fill the gap with joint mortar in accordance with **Standard Specification Section 9-04.3**.
3. The maximum depth from the finished grade to the lowest pipe invert shall be 5' (ft).
4. The frame and grate may be installed with the flange down, or integrally cast into the adjustment section with flange up.
5. The Precast Base Section may have a rounded floor, and the walls may be sloped at a rate of 1 : 24 or steeper.
6. The opening shall be measured at the top of the **Precast Base Section**.
7. All pickup holes shall be grouted full after the basin has been placed.

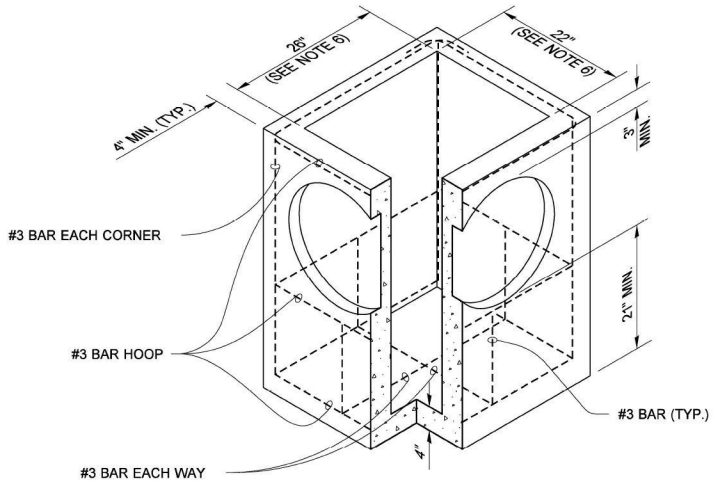

PRECAST BASE SECTION

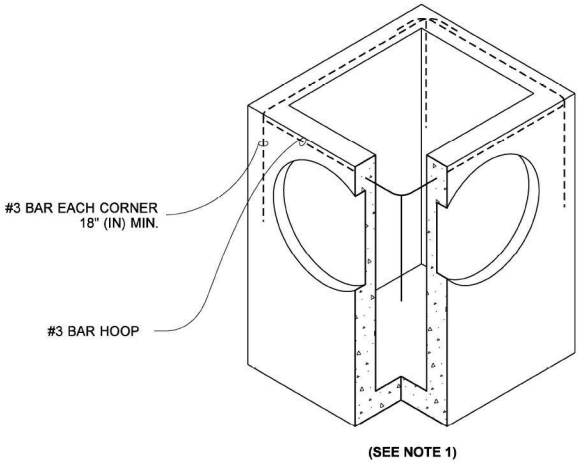

(SEE NOTE 1)

ALTERNATIVE PRECAST BASE SECTION

JULIE HEILMAN
STATE OF WASHINGTON
41819
REGISTERED
PROFESSIONAL ENGINEER

Julie Heilman
Julie Heilman
2020.09.01 07:52:50 -07'00'

CATCH BASIN TYPE 1

STANDARD PLAN B-5.20-03

SHEET 1 OF 1 SHEET

APPROVED FOR PUBLICATION
Roark, Steve
Digitally signed by Roark, Steve
Date: 2020.09.09 09:45:23 -07'00'
STATE DESIGN ENGINEER
Washington State Department of Transportation

Provided to Builders Exchange of WA, Inc. For usage Conditions Agreement see www.bxwa.com - Always Verify Scal

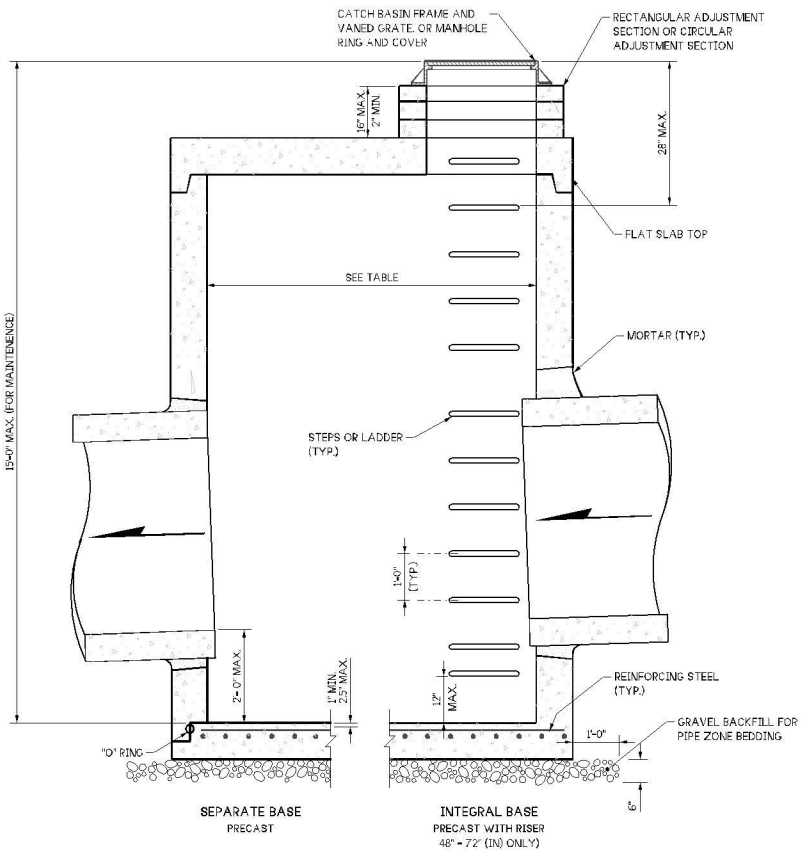

NOTES:

1. No steps are required when height is 4' or less.
2. The bottom of the precast catch basin may be sloped to facilitate cleaning.
3. The rectangular frame and grate may be installed with the flange up or down. The frame may be cast into the adjustment section.
4. Knockouts shall have a wall thickness of 2" (in) minimum to 2.5" (in) maximum. Provide a 1.5" (in) minimum gap between the knockout wall and the outside of the pipe. After the pipe is installed, fill the gap with joint mortar in accordance with **Standard Specification Section 9-04.3.**
5. Pipe allowances will vary depending on the pipe material used. Contact the Region Hydraulics Engineer for assistance.

CATCH BASIN DIMENSIONS				
CATCH BASIN DIAMETER	MIN. WALL THICKNESS	MIN. BASE THICKNESS	MAXIMUM KNOCKOUT SIZE	MINIMUM DISTANCE BETWEEN KNOCKOUTS
48"	4"	6"	36"	8"
54"	4.5"	8"	42"	8"
60"	5"	8"	48"	8"
72"	6"	8"	60"	12"
84"	8"	12"	72"	12"
96"	8"	12"	84"	12"
120"	10"	12"	96"	12"
144"	12"	12"	108"	12"

PIPE ALLOWANCES					
CATCH BASIN DIAMETER	PIPE MATERIAL WITH MAXIMUM INSIDE DIAMETER				
	CONCRETE	ALL METAL	CPSSP ① PP ④	SOLID WALL PVC ②	PROFILE WALL PVC ③
48"	24"	30"	24"	30"	30"
54"	30"	36"	30"	36"	36"
60"	36"	42"	36"	42"	42"
72"	42"	54"	42"	48"	48"
84"	54"	60"	54"	48"	48"
96"	60"	72"	60"	48"	48"
120"	66"	84"	60"	48"	48"
144"	78"	96"	60"	48"	48"

① Corrugated Polyethylene Storm Sewer Pipe (See Standard Specification Section 9-05.20)
② (See Standard Specification Section 9-05.12(1))
③ (See Standard Specification Section 9-05.12)2))
④ Polypropolyne Pipe (See Standard Specification Section 9-05.24)

JULIE HEILMAN
STATE OF WASHINGTON
41819
REGISTERED
PROFESSIONAL ENGINEER

Aug 23, 2023

CATCH BASIN TYPE 2

STANDARD PLAN B-10.20-03

SHEET 1 OF 1 SHEET

APPROVED FOR PUBLICATION

Mark A Hoines Aug 23, 2023

STATE DESIGN ENGINEER

Washington State Department of Transportation

Provided to Builders Exchange of WA, Inc. For usage Conditions Agreement see www.bxwa.com - Always Verify Scal

DRAWN BY: FERN LIDDELL

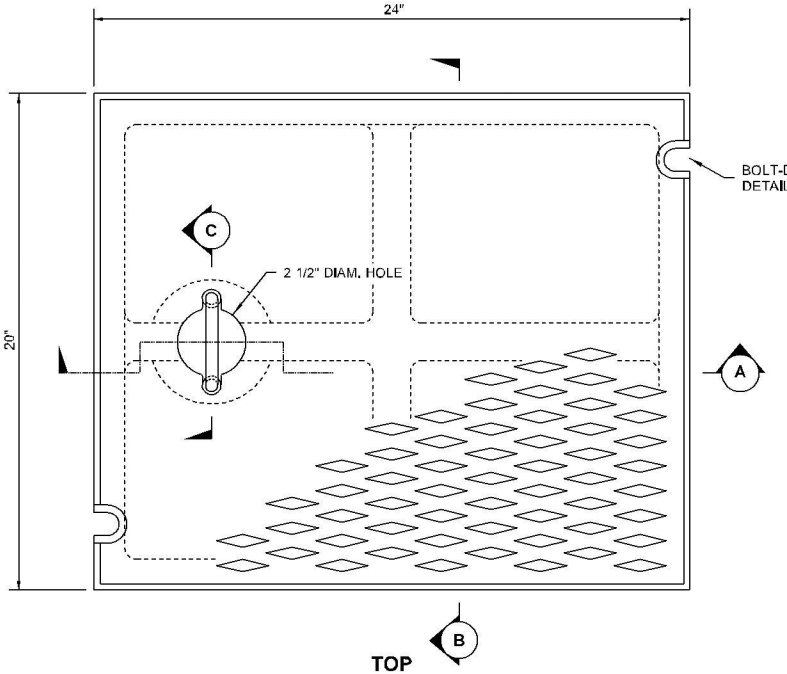

TOP

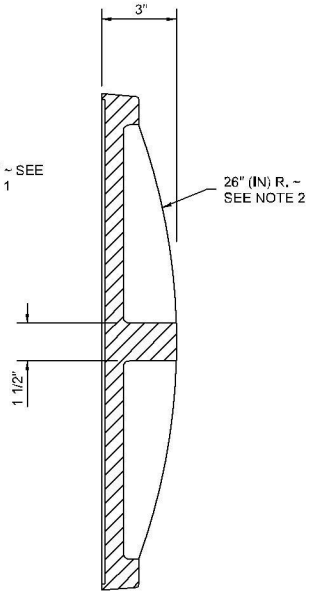

SECTION (B)

NOTES

1. Bolt-down capability is required on all frames, grates, and covers, unless specified otherwise in the Contract. Provide 2 holes in the frame that are vertically aligned with the grate or cover slots. The frame shall accept the 304 Stainless Steel (S.S.) 5/8" (in) - 11 NC × 2" (in) allen head cap screw by being tapped, or other approved mechanism. Location of bolt-down holes varies by manufacturer.
2. Alternative reinforcing designs are acceptable in lieu of the rib design.
3. Refer to **Standard Specification Section 9-05.15** and **9-05.15(2)** for additional requirements.
4. For frame details, see **Standard Plan B-30.10.**

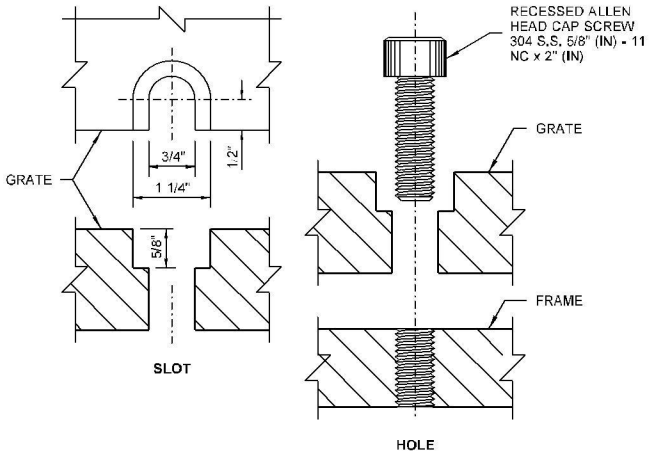

BOLT-DOWN DETAILS
SEE NOTE 1

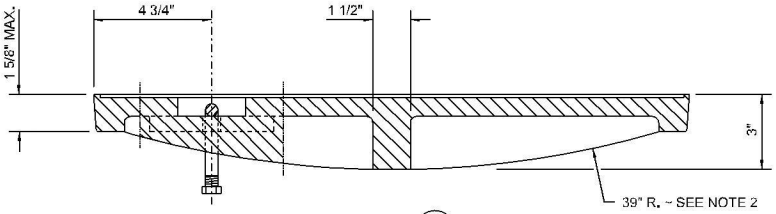

SECTION (A)

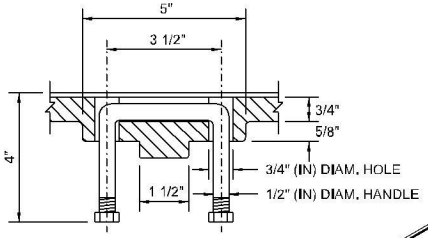

SECTION (C)

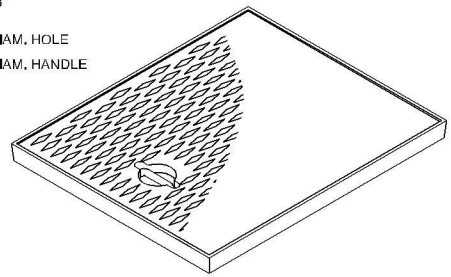

ISOMETRIC

JULIE HEILMAN
STATE OF WASHINGTON
41819
REGISTERED
PROFESSIONAL ENGINEER

Heilman, Julie
Feb 20 2018 12:53 PM

RECTANGULAR SOLID METAL COVER

STANDARD PLAN B-30.20-04

SHEET 1 OF 1 SHEET

APPROVED FOR PUBLICATION
Carpenter, Jeff
Feb 27 2018 7:57 AM
STATE DESIGN ENGINEER
Washington State Department of Transportation

Provided to Builders Exchange of WA, Inc. For usage Conditions Agreement see www.bxwa.com - Always Verify Scal

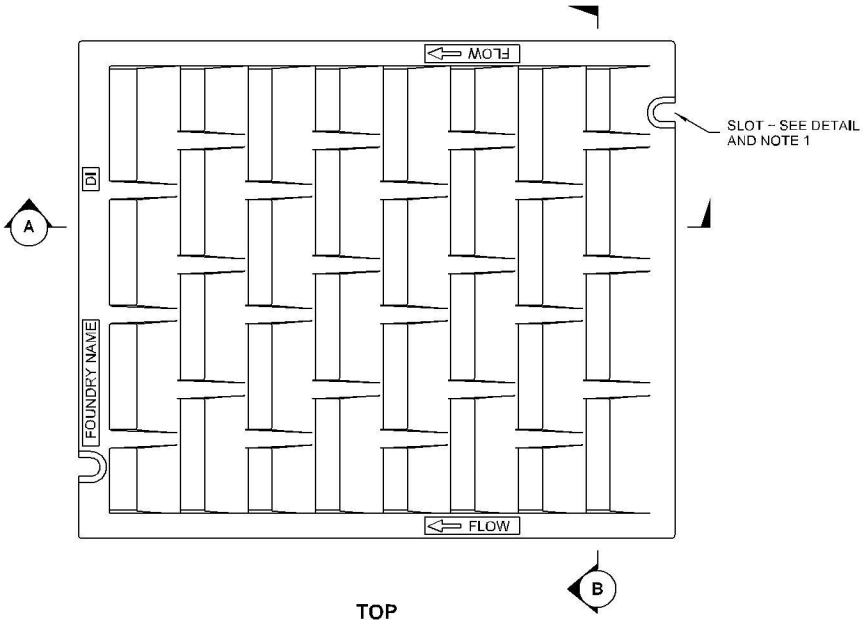

TOP

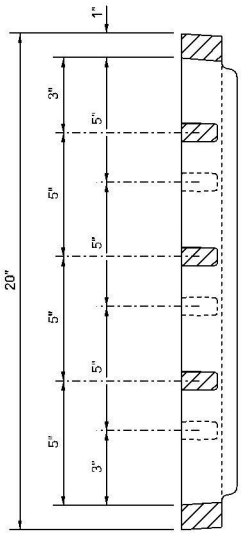

SECTION (B)

NOTES

1. Bolt-down capability is required on all frames, grates, and covers, unless specified otherwise in the Contract. Provide 2 holes in the frame that are vertically aligned with the grate or cover slots. The frame shall accept the 304 Stainless Steel (S.S.) 5/8" (in) - 11 NC × 2" (in) allen head cap screw by being tapped, or other approved mechanism. Location of bolt-down holes varies by manufacturer.
2. Refer to **Standard Specification Section 9-05.15** and **9-05.15(2)** for additional requirements.
3. For frame details, see **Standard Plan B-30.10.**

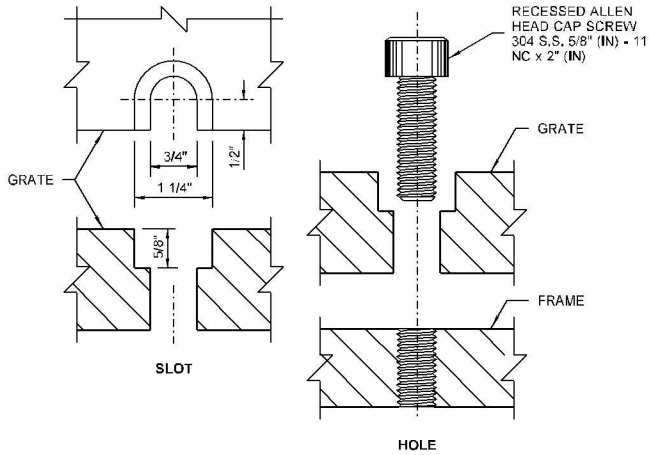

BOLT-DOWN DETAILS
SEE NOTE 1

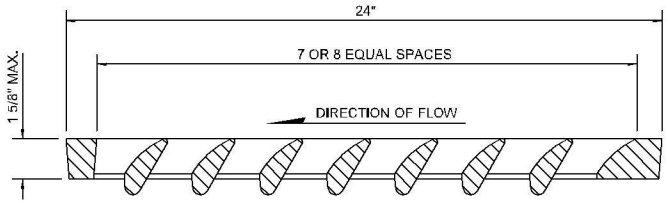

SECTION (A)

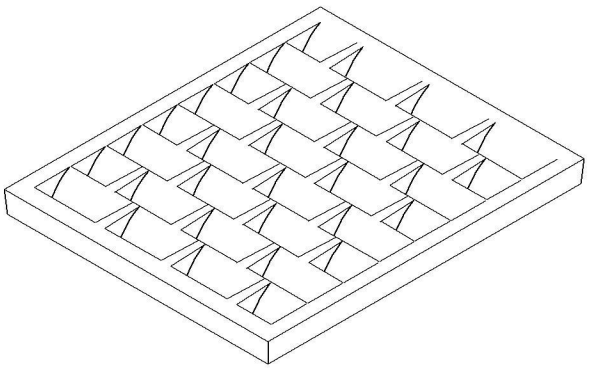

ISOMETRIC

JULIE HEILMAN
STATE OF WASHINGTON
41819
REGISTERED
PROFESSIONAL ENGINEER

Heilman, Julie
Feb 20 2018 12:54 PM

cosign

RECTANGULAR VANED GRATE

STANDARD PLAN B-30.30-03

SHEET 1 OF 1 SHEET

APPROVED FOR PUBLICATION
Carpenter, Jeff
Feb 27 2018 7:58 AM
cosign
STATE DESIGN ENGINEER
Washington State Department of Transportation

DRAWN BY: FERN LIDDELL

Provided to Builders Exchange of WA, Inc. For usage Conditions Agreement see www.bxwa.com - Always Verify Scal

DRAWN BY: FERN LIDDELL

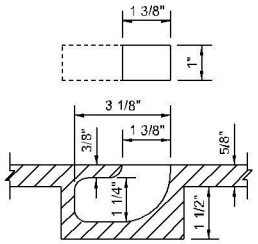

BLIND PICK NOTCH
DETAIL "A"

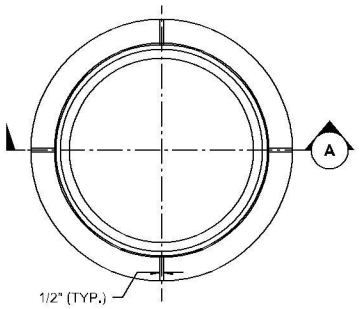

RING PLAN

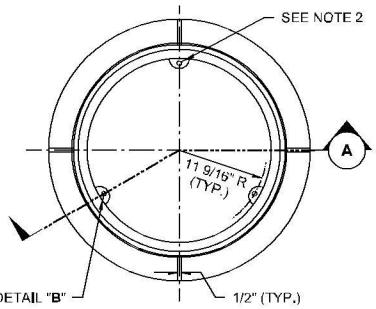

RING PLAN

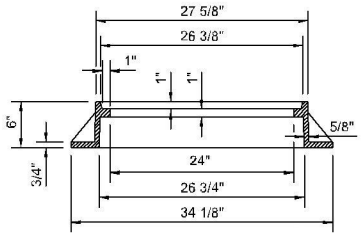

RING SECTION (A)

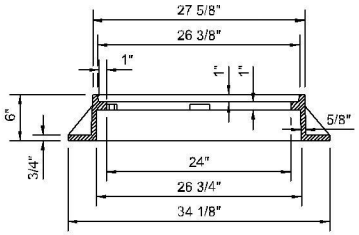

RING SECTION (A)

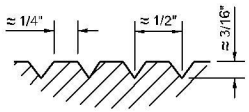

SKID GROOVE PATTERN
DETAIL

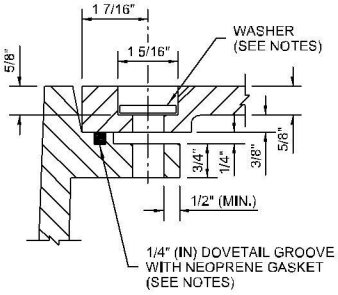

BOLT-DOWN / WATERTIGHT
DETAIL "B"

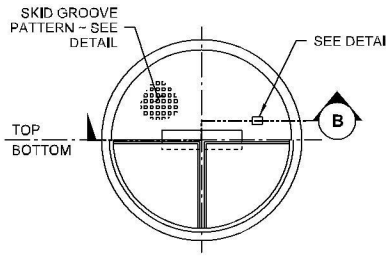

COVER PLAN

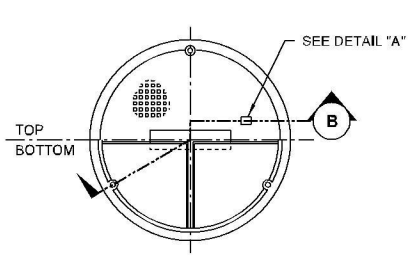

COVER PLAN

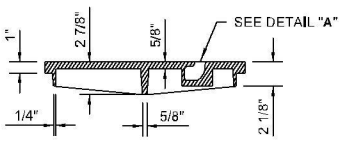

COVER SECTION (B)
(SEE NOTE 7)

STANDARD
TYPE 1

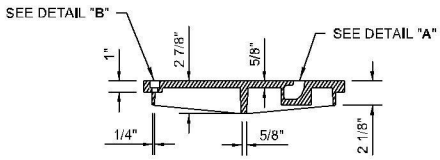

COVER SECTION (B)
(SEE NOTE 7)

BOLT-DOWN / WATERTIGHT
TYPE 2

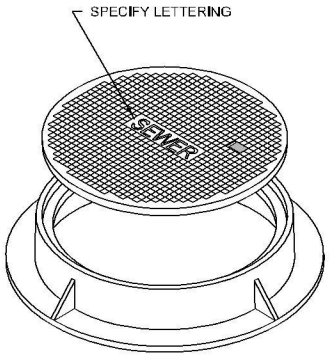

ISOMETRIC VIEW

NOTES

1. The gasket and groove may be in the seat (frame) or in the underside of the cover. The gasket may be "T" shaped in section. The groove may be cast or machined.
2. Bolt-down capability is required on all frames, grates, and covers, unless specified otherwise in the Contract. Provide 3 holes in the frame that are vertically aligned with the grate or cover slots. The frame shall accept the 304 Stainless Steel (S.S) 5/8" - 11 NC x 2" (in) allen head cap screw by being tapped, or other approved mechanism. Location of bolt down holes varies by manufacturer.
3. For bolt-down manhole ring and covers that are not designated "Watertight," the neoprene gasket, groove, and washer are not required.
4. Washer shall be neoprene (Detail "B").
5. In lieu of blind pick notch for manhole covers, a single 1" (in) pick hole is acceptable. Hole location and number of holes may vary by manufacturer.
6. Alternative reinforcing designs are acceptable in lieu of the rib design.
7. For clarity, the vertical scale of the Cover Section has been exaggerated, it is 1.5 times the horizontal scale (1H:1.5V).

JULIE HEILMAN
STATE OF WASHINGTON
41819
REGISTERED
PROFESSIONAL ENGINEER

Heilman, Julie
Feb 20 2018 12:55 PM

CIRCULAR FRAME (RING) AND COVER

STANDARD PLAN B-30.70-04

SHEET 1 OF 1 SHEET

APPROVED FOR PUBLICATION
Carpenter, Jeff
Feb 27 2018 7:59 AM

STATE DESIGN ENGINEER
Washington State Department of Transportation

Provided to Builders Exchange of WA, Inc. For usage Conditions Agreement see www.bxwa.com - Always Verify Scal

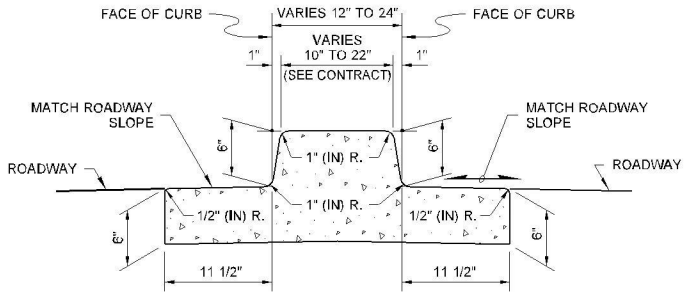

DUAL-FACED CEMENT CONCRETE TRAFFIC CURB AND GUTTER

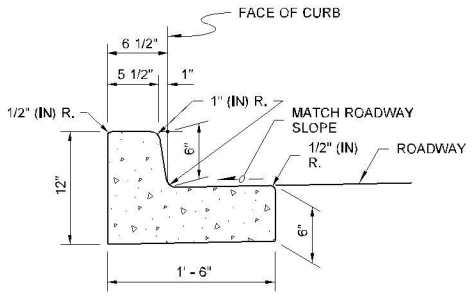

CEMENT CONCRETE TRAFFIC CURB AND GUTTER

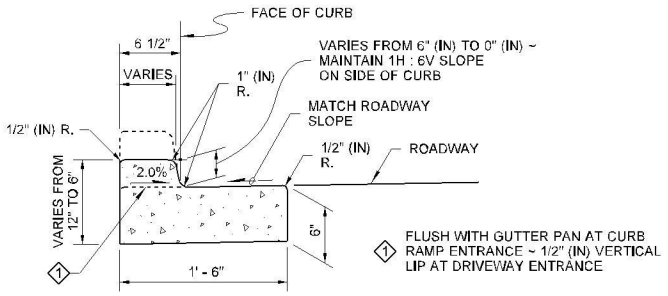

DEPRESSED CURB AND GUTTER SECTION

AT CURB RAMPS AND DRIVEWAY ENTRANCES

DRAWN BY: FERN LIDDELL

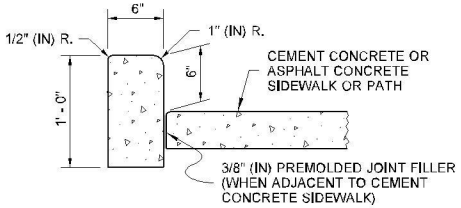

CEMENT CONCRETE PEDESTRIAN CURB

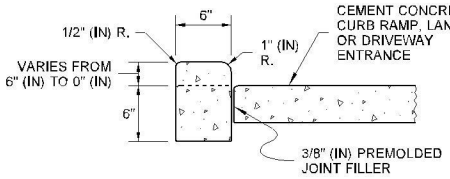

CEMENT CONCRETE PEDESTRIAN CURB

AT CURB RAMPS, LANDINGS, AND DRIVEWAY ENTRANCES

NOTE

1. See **Standard Plan F-30.10** for Curb Expansion and Contraction Joint spacing. See **Standard Specification, Sections 8-04 and 9-04** for additional requirements.

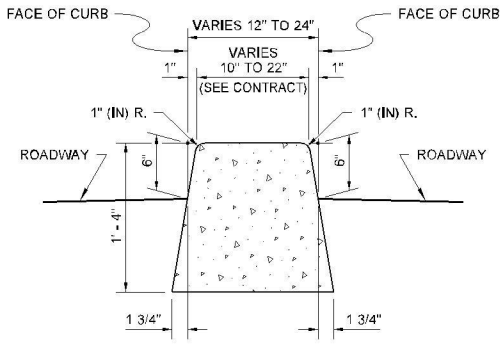

DUAL-FACED CEMENT CONCRETE TRAFFIC CURB

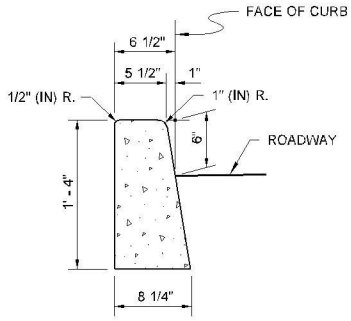

CEMENT CONCRETE TRAFFIC CURB

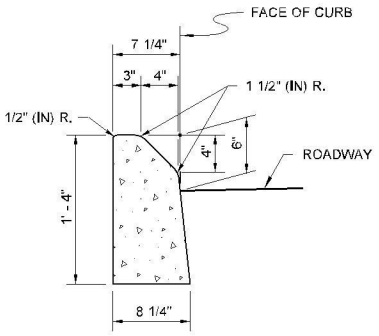

MOUNTABLE CEMENT CONCRETE TRAFFIC CURB



Michael S Fleming

Digitally signed by Michael S Fleming
Date: 2020.09.24 07:39:38 -07'00'

CEMENT CONCRETE CURBS

STANDARD PLAN F-10.12-04

SHEET 1 OF 1 SHEET

APPROVED FOR PUBLICATION
Date: 2020.09.24 07:57:43 -07'00'
STATE DESIGN ENGINEER
Washington State Department of Transportation

Provided to Builders Exchange of WA, Inc. For usage Conditions Agreement see www.bxwa.com - Always Verify Scal

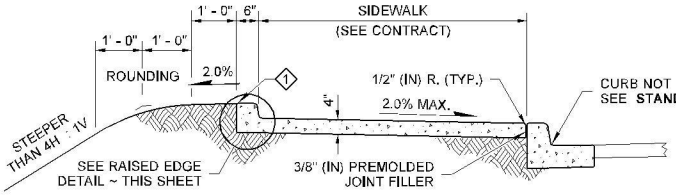

WITH RAISED EDGE

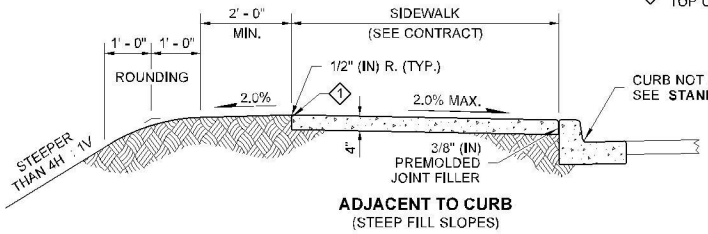

ADJACENT TO CURB
(STEEP FILL SLOPES)

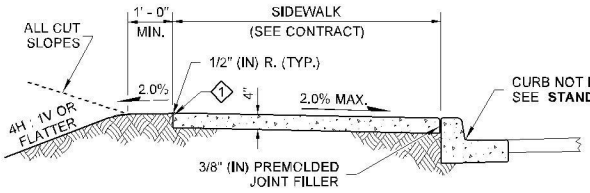

ADJACENT TO CURB

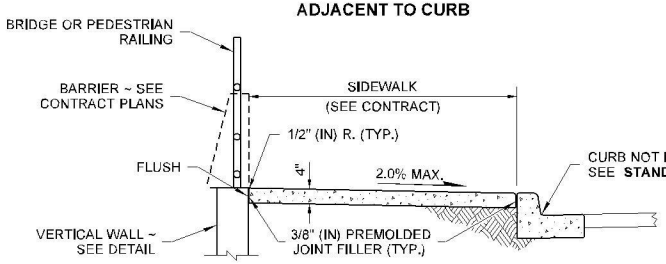

ADJACENT TO CURB AND RAILING OR WALL

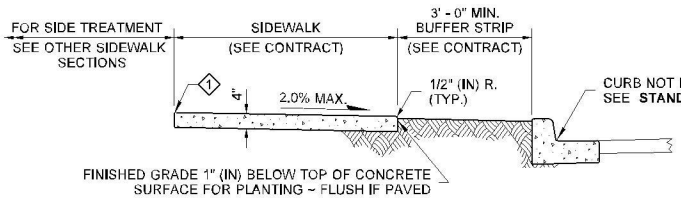

ADJACENT TO BUFFER STRIP

1 FINISHED GRADE 1" (IN) BELOW TOP OF CONCRETE SURFACE

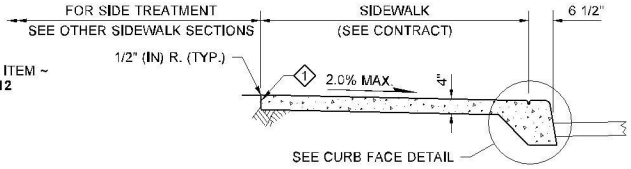

MONOLITHIC CEMENT CONCRETE CURB AND SIDEWALK

NOTE

1. Gratings, Access Covers, Junction Boxes, Cable Vaults, Pull Boxes and other appurtenances within the sidewalk must have slip resistant surfaces, be flush with surface, and match grade of the sidewalk.

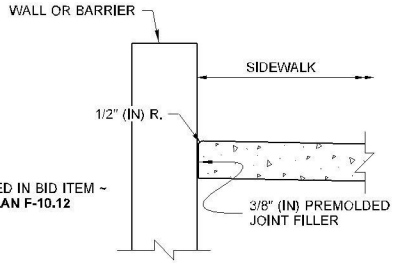

SIDEWALK ADJACENT TO WALL DETAIL

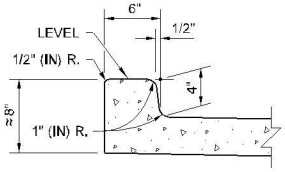

RAISED EDGE DETAIL

EXTEND SIDEWALK TRANSVERSE JOINTS TO INCLUDE RAISED EDGE

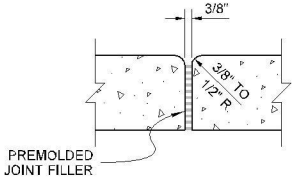

Ⓔ **EXPANSION JOINT**

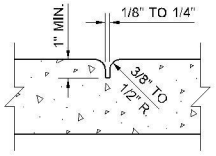

Ⓒ **CONTRACTION JOINT**

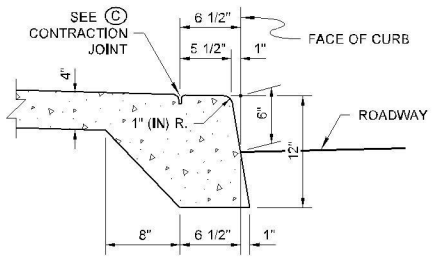

CURB FACE DETAIL

EXTEND SIDEWALK TRANSVERSE EXPANSION JOINTS TO INCLUDE CURB (FULL DEPTH)

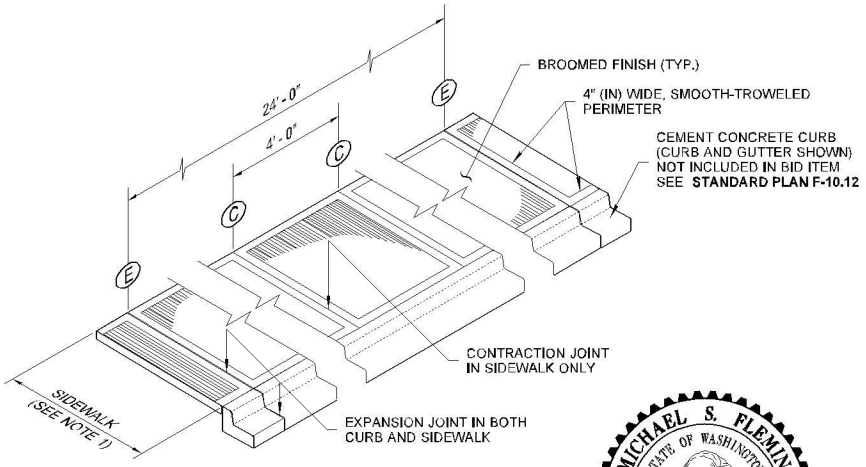

ISOMETRIC VIEW

JOINT AND FINISH DETAIL

DRAWN BY: LISA CYFORD

MICHAEL S. FLEMING
STATE OF WASHINGTON
38777
REGISTERED
PROFESSIONAL ENGINEER

Michael S Fleming
Digitally signed by Michael S Fleming
Date: 2020.09.24 07:40:16 -07'00'

CEMENT CONCRETE SIDEWALK

STANDARD PLAN F-30.10-04

SHEET 1 OF 1 SHEET

APPROVED FOR PUBLICATION
Date: 2020.09.25 15:43:50 -07'00'
STATE DESIGN ENGINEER
Washington State Department of Transportation

Provided to Builders Exchange of WA, Inc. For usage Conditions Agreement see www.bxwa.com - Always Verify Scal

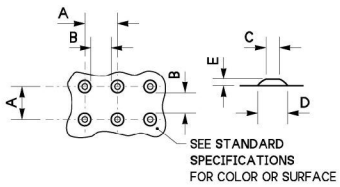

	MIN.	MAX.
A	1.60"	2.40"
B	0.65"	
C	0.45"	0.90"
D	0.90"	1.40"
E	0.20"	0.20"

TRUNCATED DOME DETAILS
(SEE NOTE 3)

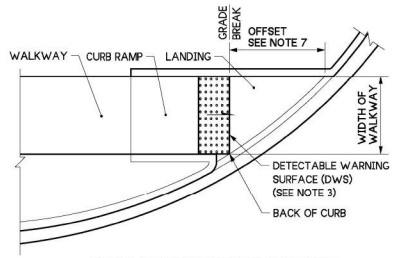

SINGLE DIRECTION CURB RAMP
(GRADE BREAK BETWEEN CURB AND LANDING < 5 FEET FROM BACK OF CURB)
(SEE NOTE 5)

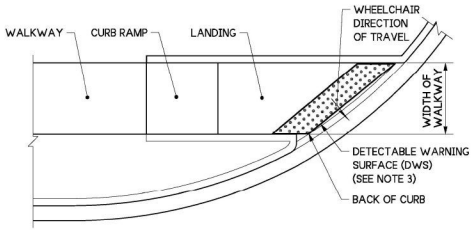

SINGLE DIRECTION CURB RAMP
(GRADE BREAK BETWEEN CURB AND LANDING > 5 FEET FROM BACK OF CURB)
(SEE NOTE 5)

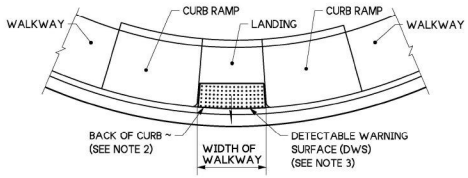

PARALLEL CURB RAMP
(SEE NOTE 6)

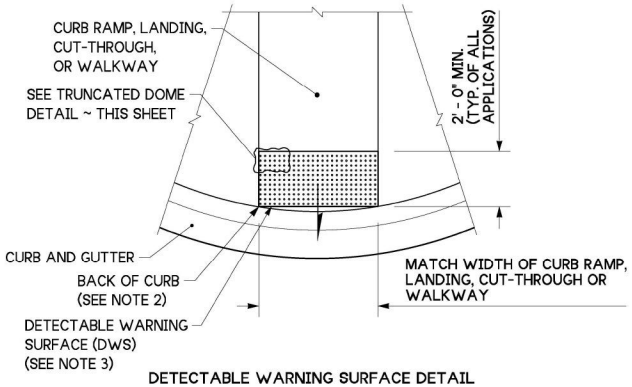

DETECTABLE WARNING SURFACE DETAIL

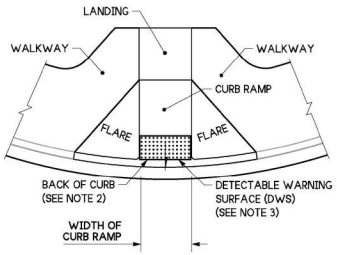

PERPENDICULAR CURB RAMP
(SEE NOTE 6)

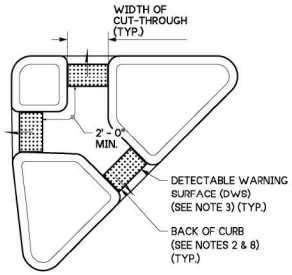

ISLAND CUT-THROUGH

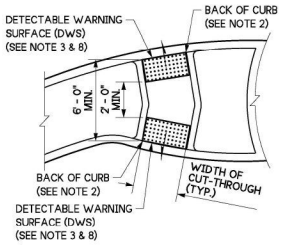

ROUNDABOUT SPLITTER ISLAND

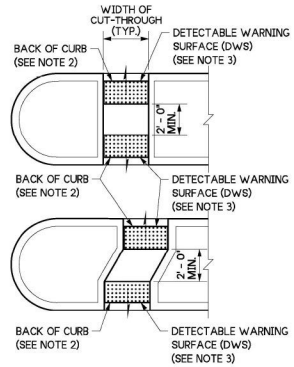

MEDIAN CUT-THROUGH

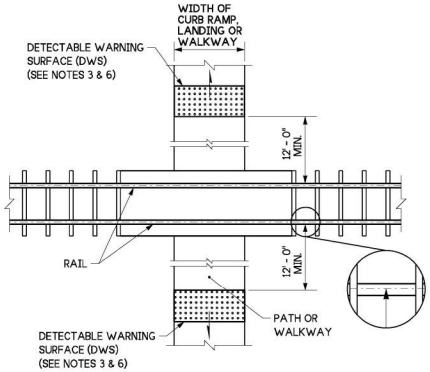

PEDESTRIAN RAILROAD CROSSING

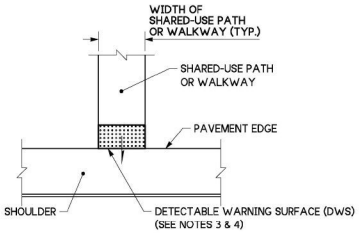

SHARED-USE PATH CONNECTION

NOTES:

1. Permanent Detectable Warning Surfaces (DWS) shall extend the full width of the curb ramp, landing, or other roadway entrance as applicable. Exception: If the manufacturer of the DWS requires a concrete border around the DWS, a variance of up to 2" (in) on each side of the DWS is permitted.
2. Permanent Detectable Warning Surfaces (DWS) shall be placed on a minimum 4" (in) thick concrete pad. The DWS panel shall be placed adjacent to the back of the curb and with no more than a 2" (in) gap between the DWS and the back of the curb measured at the center of the DWS panel. Exception: If the Manufacturer of the selected DWS requires a concrete border around the DWS, a variance of up to 2" (in) from the back of the curb is permitted (measured at the leading corners of the DWS panel).
3. The rows of truncated domes shall be aligned to be parallel to the direction of travel, and perpendicular to the grade break at the back of curb.
4. If curb and gutter are not present, such as a shared-use path connection, the Detectable Warning Surface shall be placed at the pavement edge.
5. See **Standard Plans** for sidewalk and curb ramp details.
6. If a curb ramp is required, the location of the Detectable Warning Surface must be at the bottom of the ramp and within the required distance from the rail crossing.
7. When the grade break between the curb ramp and the landing is less than or equal to 5 feet from the back of curb at all points, place the Detectable Warning Surface on the bottom of the curb ramp directly above the grade break.
8. Glued or stick down Detectable Warning Surfaces are allowed only for temporary work zone applications.

LEGEND
DIRECTION OF TRAVEL



Jun 4, 2024

DETECTABLE WARNING SURFACE

STANDARD PLAN F-45.10-05

SHEET 1 OF 1 SHEET

APPROVED FOR PUBLICATION
Mark A Peaires Jun 4, 2024
STATE DESIGN ENGINEER
Washington State Department of Transportation

Provided to Builders Exchange of WA, Inc. For usage Conditions Agreement see www.bxwa.com - Always Verify Scal

DRAWN BY: LISA CYFORD

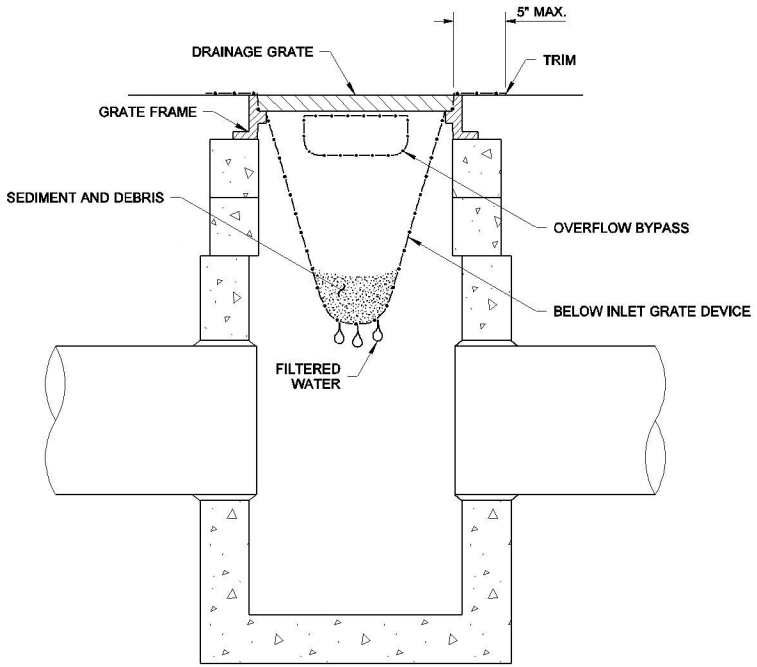

SECTION VIEW
NOT TO SCALE

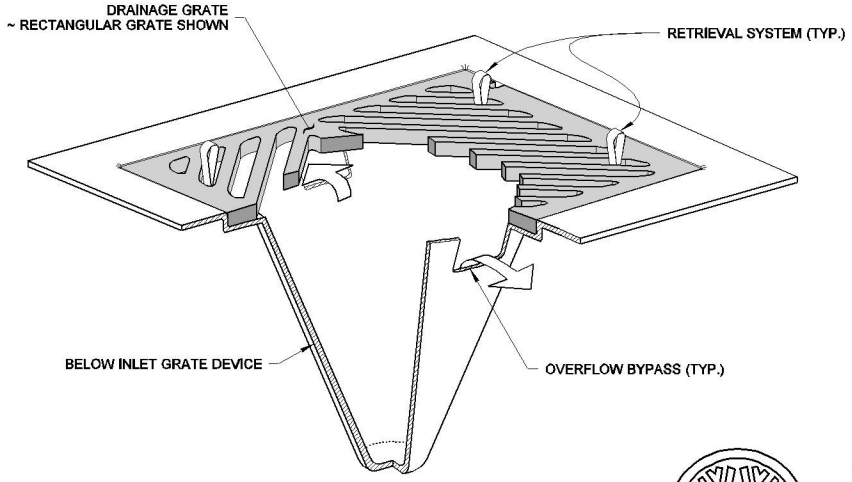

ISOMETRIC VIEW

NOTES

1. Size the Below Inlet Grate Device (BIGD) for the storm water structure it will service.
2. The BIGD shall have a built-in high-flow relief system (overflow bypass).
3. The retrieval system must allow removal of the BIGD without spilling the collected material.
4. Perform maintenance in accordance with Standard Specification 8-01.3(15).

STATE OF WASHINGTON
REGISTERED
LANDSCAPE ARCHITECT
MARK W. MAURER
CERTIFICATE NO. 000598

NOTE: THIS PLAN IS NOT A LEGAL ENGINEERING DOCUMENT BUT AN ELECTRONIC DUPLICATE. THE ORIGINAL, SIGNED BY THE ENGINEER AND APPROVED FOR PUBLICATION, IS KEPT ON FILE AT THE WASHINGTON STATE DEPARTMENT OF TRANSPORTATION. A COPY MAY BE OBTAINED UPON REQUEST.

STORM DRAIN INLET PROTECTION

STANDARD PLAN I-40.20-00

SHEET 1 OF 1 SHEET

APPROVED FOR PUBLICATION

Pasco Bakotich III — STATE DESIGN ENGINEER
09-20-07 — DATE

Washington State Department of Transportation

Provided to Builders Exchange of WA, Inc. For usage Conditions Agreement see www.bxwa.com - Always Verify Scal

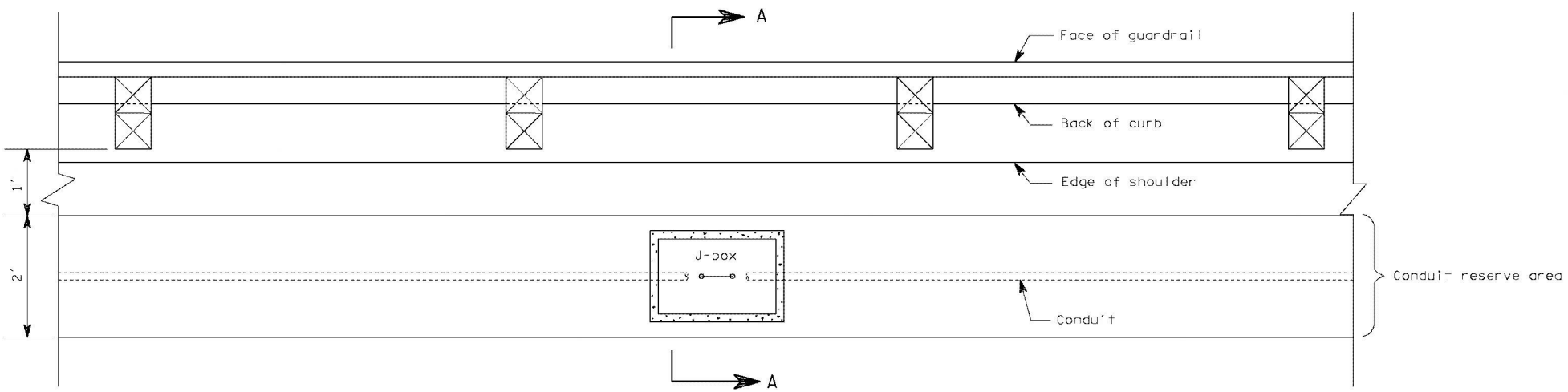

PLAN

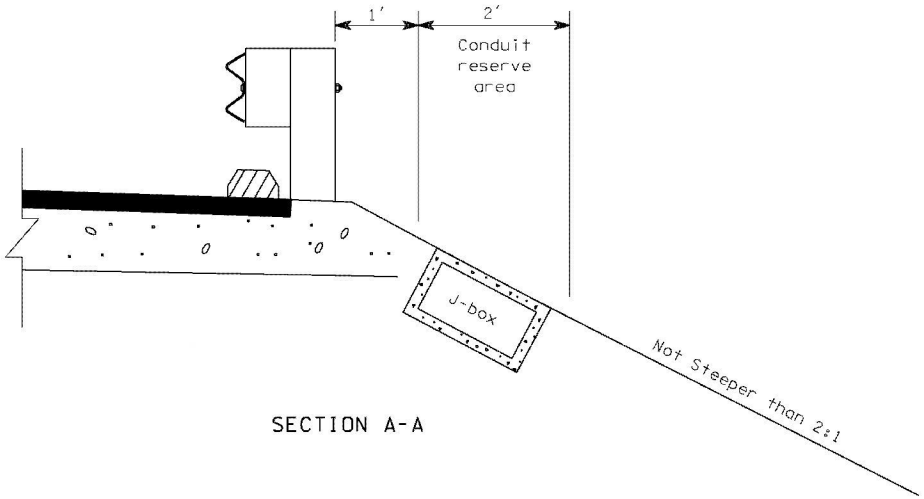

SECTION A-A

ELECTRICAL CONDUIT PLACEMENT

WILLIAM D. BROWN
STATE OF WASHINGTON
0014812
REGISTERED
PROFESSIONAL ENGINEER
EXPIRES SEPT 10, 1998

NOTE: THIS PLAN IS NOT A LEGAL ENGINEERING DOCUMENT BUT AN ELECTRONIC DUPLICATE. THE ORIGINAL SIGNED BY THE ENGINEER AND DATED AND APPROVED PLANS ARE ON FILE AT THE WASHINGTON STATE DEPARTMENT OF TRANSPORTATION. A COPY MAY BE OBTAINED UPON REQUEST.

STANDARD PLAN J-10

APPROVED FOR PUBLICATION

Clifford E. Mansfield *07-18-97*

STATE DESIGN ENGINEER — DATE

WASHINGTON STATE DEPARTMENT OF TRANSPORTATION
OLYMPIA, WASHINGTON

Provided to Builders Exchange of WA, Inc. For usage Conditions Agreement see www.bxwa.com - Always Verify Scal

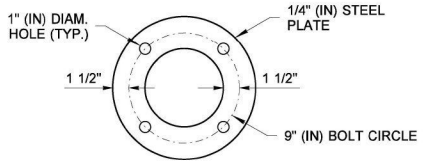

ANCHOR BOLT TEMPLATE

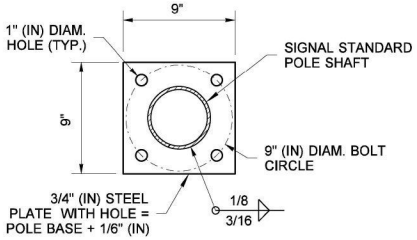

BASE PLATE DETAIL

NOTES

1. Round foundations require five reinforcing steel hoops at ~ 10" spacing. Square foundations require three reinforcing steel hoops at ~ 1' - 3 1/2" spacing.
2. Nuts for anchor bolts shall be **ASTM A563** Grade A, D, or DH. Washers for anchor bolts shall meet ASTM F436.
3. Supplemental grounding conductor shall be non-insulated #4 AWG stranded copper and shall be clamped to vertical rebar and anchor bolt with connectors suitable for use embedded in concrete. Supplemental ground shall be verified intact by Contracting Agency Inspector before placing concrete.
4. Junction box serving the Standard shall preferably be located 5' - 0" (10' - 0" Max.) from the Standard.
5. Provide cable tie at wiring entering the junction box ~ See **Detail A, Standard Plan J-28.70**.
6. See **Standard Plan J-20.16**, **J-21.15**, **J-21.16**, or **J-22.15** as applicable for pole details above this point.

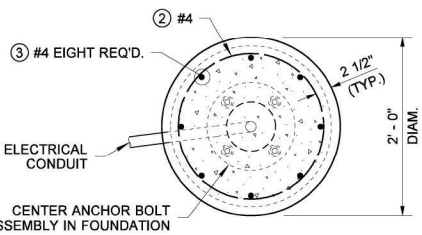

SECTION (A)

ROUND FOUNDATION - PLAN VIEW

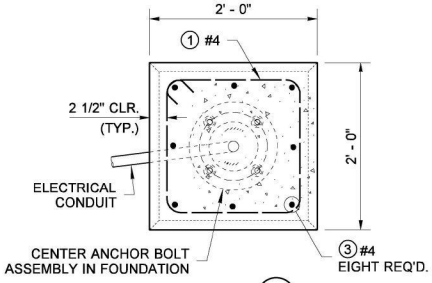

SECTION (B)

SQUARE FOUNDATION - PLAN VIEW

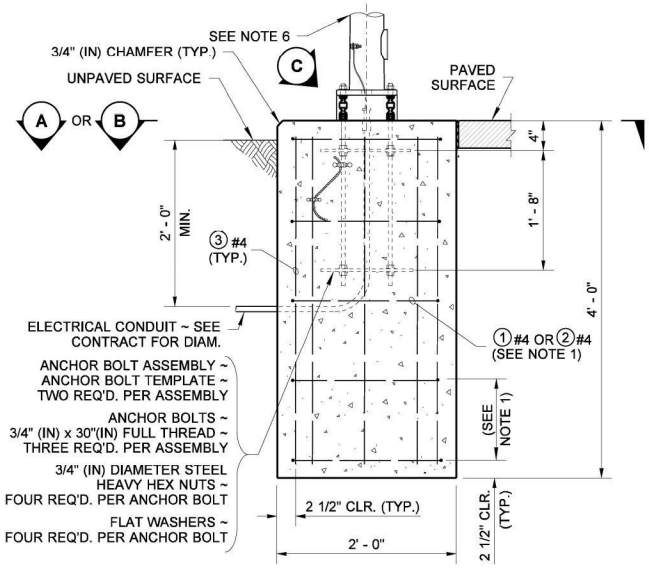

ELEVATION

FLAT FOUNDATION DETAIL

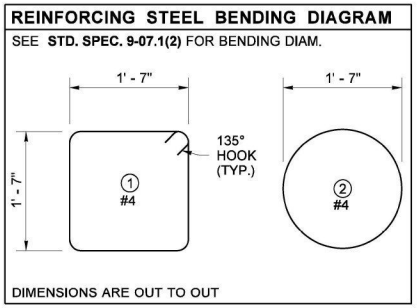

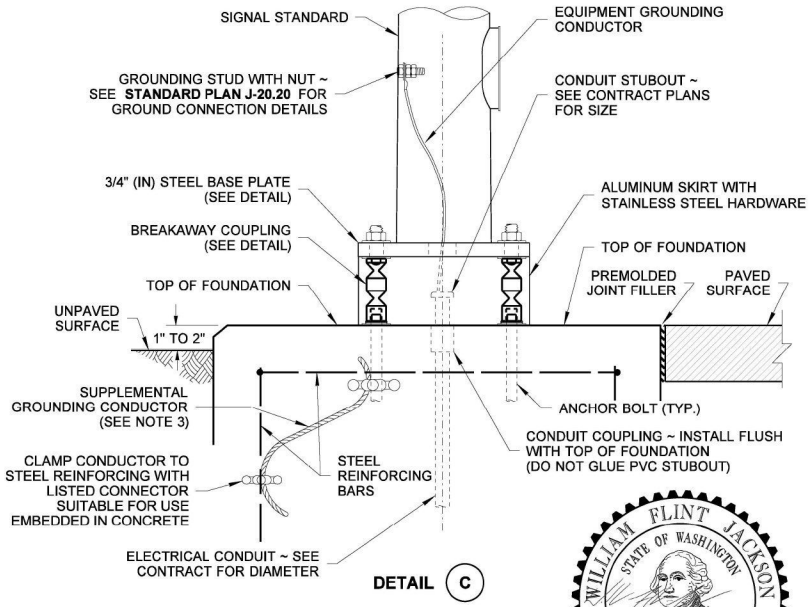

DETAIL (C)

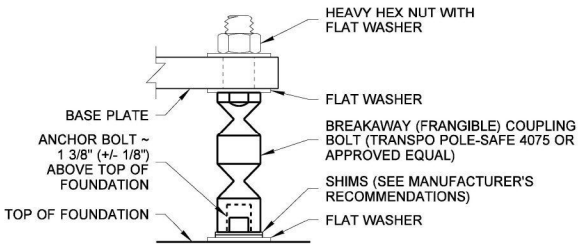

BREAKAWAY COUPLING DETAIL

Jun 20, 2024

TYPE PS, TYPE 1, RM & FB SIGNAL STANDARD FOUNDATION DETAILS

STANDARD PLAN J-21.10-05

SHEET 1 OF 2 SHEETS

APPROVED FOR PUBLICATION

Mark A Paine Jun 21, 2024

STATE DESIGN ENGINEER

Washington State Department of Transportation

Provided to Builders Exchange of WA, Inc. For usage Conditions Agreement see www.bxwa.com - Always Verify Scal

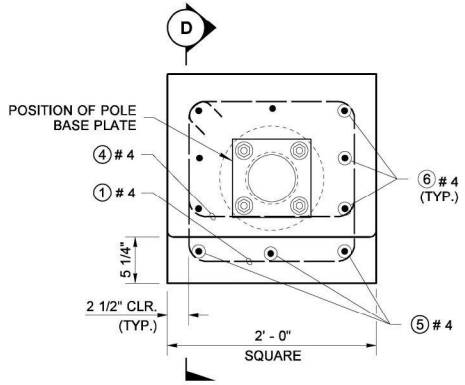

PLAN VIEW

FOUNDATION DETAILS

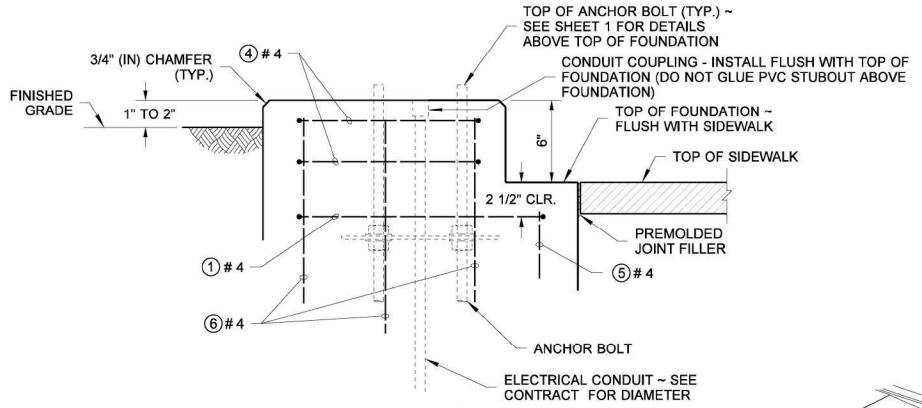

SECTION D

REINFORCING STEEL QUANTITIES LIST				
MARK	①	④	⑤	⑥
QTY.	3	2	3	7

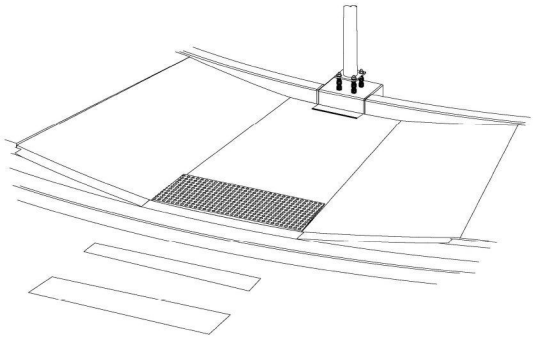

PERSPECTIVE VIEW
(SKIRT NOT SHOWN)

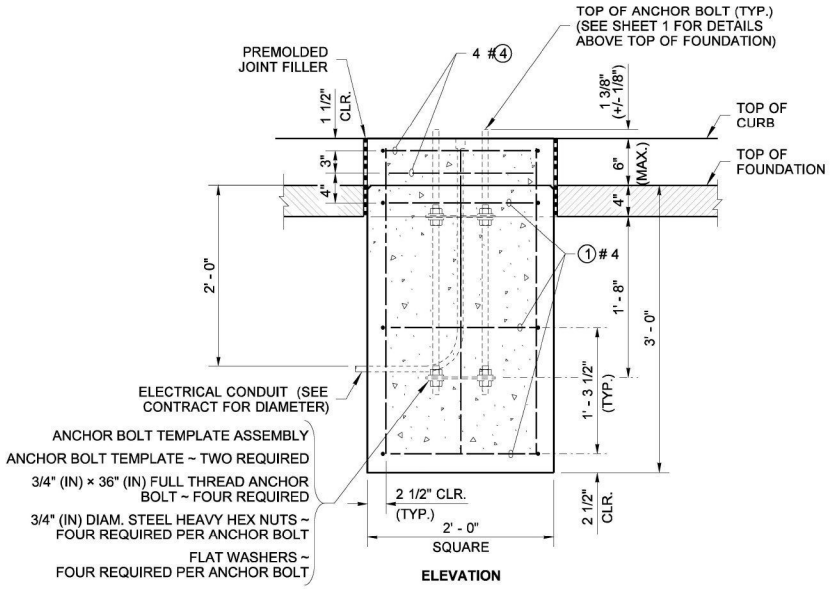

ELEVATION

CURB FOUNDATION DETAIL

(SEE SHEET 1 FOR SUPPLEMENTAL GROUND)

REINFORCING STEEL BENDING DIAGRAM

SEE **STD. SPEC. 9-07.1(2)** FOR BENDING DIAMETER

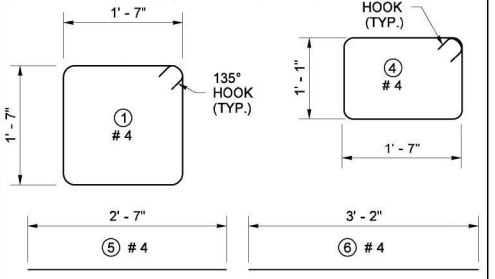

DIMENSIONS ARE OUT TO OUT



Jun 20, 2024

TYPE PS, TYPE 1, RM & FB SIGNAL STANDARD FOUNDATION DETAILS

STANDARD PLAN J-21.10-05

SHEET 2 OF 2 SHEETS

APPROVED FOR PUBLICATION

Mark A Bairas Jun 21, 2024

STATE DESIGN ENGINEER

Washington State Department of Transportation

Provided to Builders Exchange of WA, Inc. For usage Conditions Agreement see www.bxwa.com - Always Verify Scal

DRAWN BY: LISA CYFORD

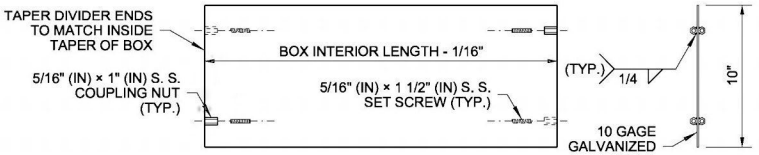

DIVIDER PLATE
ELEVATION VIEW
(FOR TYPE 2 JUNCTION BOX ONLY)

JUNCTION BOX DIMENSION TABLE

MARK	ITEM	BOX TYPE	
		TYPE 1	TYPE 2
A	OUTSIDE LENGTH OF JUNCTION BOX	22"	33"
B	OUTSIDE WIDTH OF JUNCTION BOX	17"	22 1/2"
C	INSIDE LENGTH OF JUNCTION BOX	18" ~ 19"	28" ~ 29"
D	INSIDE WIDTH OF JUNCTION BOX	13" ~ 14"	17" ~ 18"
E	LID LENGTH	17 5/8"	28 5/8"
F	LID WIDTH	12 5/8"	18 1/8"
CAPACITY ~ CONDUIT DIAMETER		6"	12"

NOTES

1. All box dimensions are approximate. Exact configurations vary among manufacturers.
2. Minimum lid thickness shown. Junction Boxes installed in sidewalks, walkways, and shared-use paths shall have a slip-resistant coating on the lid and lip cover plate, and shall be installed with the surface flush with and matched to the grade of the sidewalk, walkway, or shared-use path. The non-slip lid shall be identified with permanent markings on the underside, indicating the type of surface treatment (see Contract Documents for details) and the year of manufacture. The permanent marking shall be 1/8" (in) line thickness formed with a mild steel weld bead and shall be placed prior to hot-dip galvanizing.
3. Lid support members shall be 3/16" (in) minimum thick steel C, L, or T shape, welded to the frame.
4. A 1/4-20 NC × 3/4" (in) stainless steel ground stud shall be welded to the bottom of the lid; include (2) stainless steel nuts and (2) stainless steel flat washers.
5. Bolts and nuts shall be liberally coated with anti-seize compound.
6. Equipment Bonding Jumper shall be # 8 AWG min. × 4' (ft) of tinned braided copper.
7. The System Identification letters shall be 1/8" (in) line thickness formed with a mild steel weld bead. See Cover Marking detail. Grind off diamond pattern before forming letters. For System Identification details, see **Standard Specification 9-29.2(4)**.
8. When required in the Contract, provide a 10" (in) x 27 1/2" (in), 10 gage divider plate, complete, with fasteners, in each Type 2 Junction Box where specified.
9. When required in Contract, provide a 12" (in) deep extension for each Type 2 Junction Box where specified.
10. See the **Standard Specifications** for alternative reinforcement and class of concrete.
11. Headed Anchor Shear Studs must be welded to the Steel Cover Lip Plate and wire tied in two places to the vertical Welded Wire Fabric when in contact with each other. Wire tie all other Headed Anchor Shear Studs to the horizontal Welded Wire Fabric.
12. Lid Bolt Down Attachment **T**ab provides a method of retrofitting by using a mechanical process in lieu of welding. Attachment Tab shown depicts a typical component arrangement; actual configurations of assembly will vary among manufacturers. See approved manufacturers' shop drawings for specifics.
13. Unless otherwise noted in the plans or approved by the Engineer, Junction Boxes, Cable Vaults, and Pull Boxes shall not be placed within the sidewalks, walkways, shared use paths, traveled ways or paved shoulders. All Junction Boxes, Cable Vaults, and Pull Boxes placed within the traveled way or paved shoulders shall be Heavy-Duty.
14. Distance between the top of the conduit and the bottom of the Junction Box lid shall be 6" (in) min. to 8" (in) max. for final grade of new construction only. See **Standard Specification 8-20.3(5)**. Where adjustments are to be made to existing Junction Boxes, or for interim construction stages during the contract, the limits shall be from 6" (in) min. to 10" (in) max. See **Standard Specification 8-20.3(6)**.

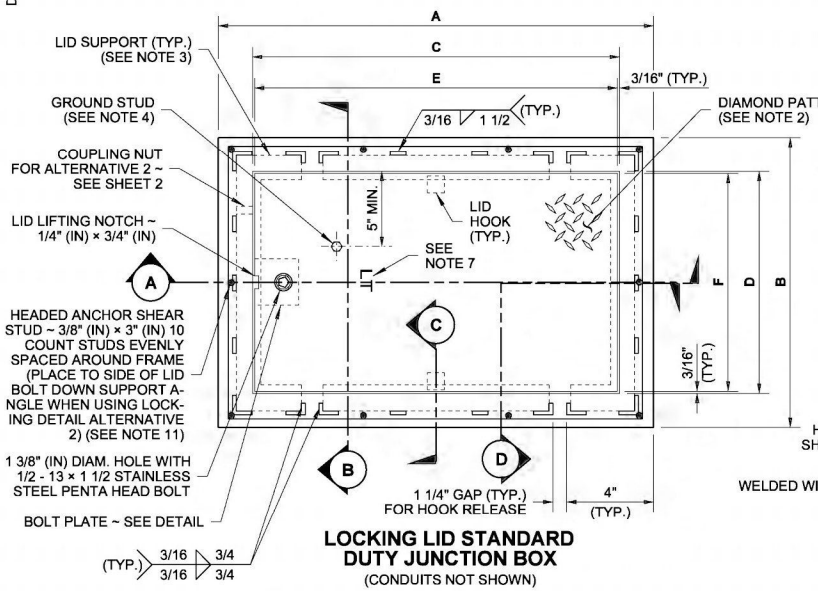

LOCKING LID STANDARD DUTY JUNCTION BOX
(CONDUITS NOT SHOWN)

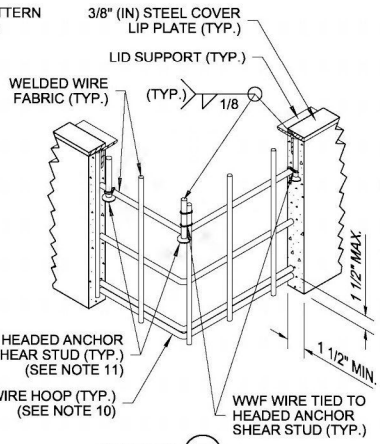

SECTION (D)
PERSPECTIVE VIEW

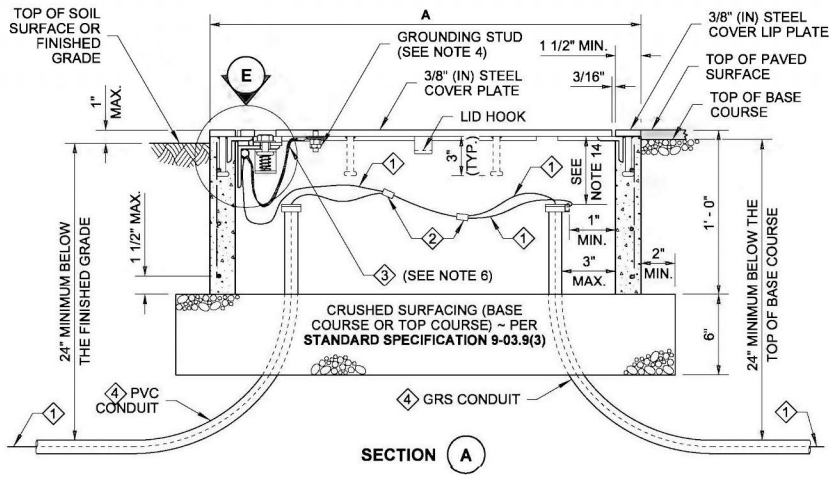

SECTION (A)

1. Equipment Grounding Conductor
2. Copper Solderless Crimp Connector
3. Equipment Bonding Jumper (See Note 6)
4. See Contract for conduit size and number

COVER MARKING DETAIL

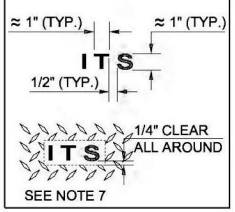

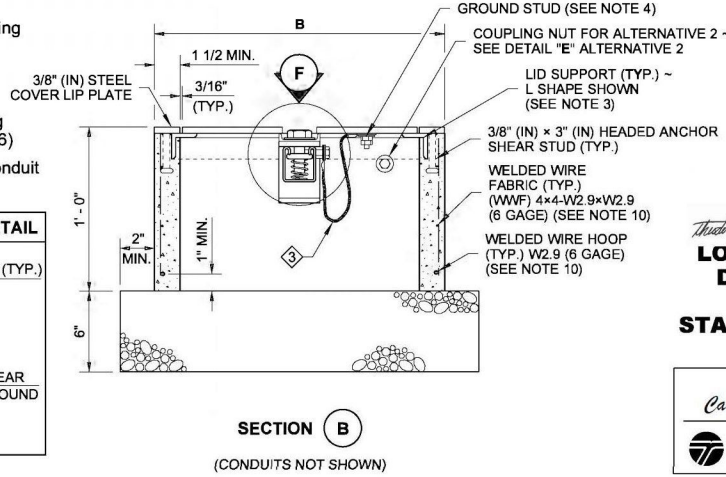

SECTION (B)
(CONDUITS NOT SHOWN)

THEODORE JOSEPH BAILEY STATE OF WASHINGTON 39820 REGISTERED PROFESSIONAL ENGINEER

Bailey, Ted
Apr 25 2016 9:32 AM

LOCKING LID STANDARD DUTY JUNCTION BOX TYPES 1 & 2 STANDARD PLAN J-40.10-04

SHEET 1 OF 2 SHEETS

APPROVED FOR PUBLICATION
Carpenter, Jeff
Apr 28 2016 3:12 PM
STATE DESIGN ENGINEER
Washington State Department of Transportation

Provided to Builders Exchange of WA, Inc. For usage Conditions Agreement see www.bxwa.com - Always Verify Scal

DRAWN BY: LISA CYFORD

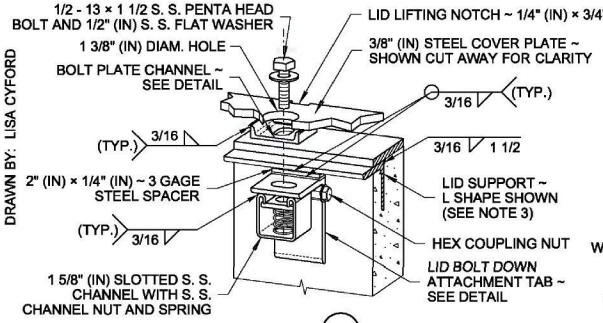

DETAIL F
ALTERNATIVE 1 SHOWN
PERSPECTIVE VIEW

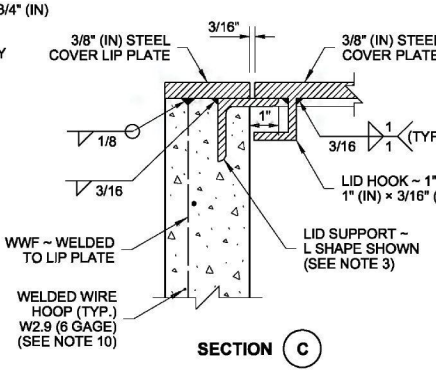

SECTION C

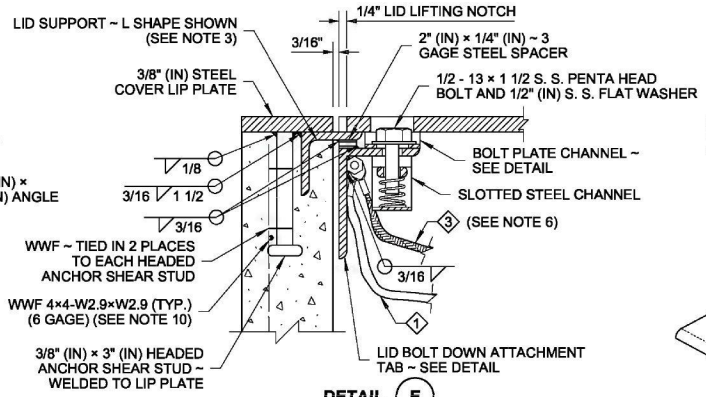

DETAIL E
ALTERNATIVE 1 SHOWN

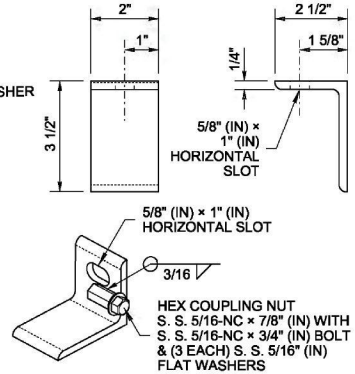

ALTERNATIVE 1
LID BOLT DOWN ATTACHMENT TAB
(SEE NOTE 12)

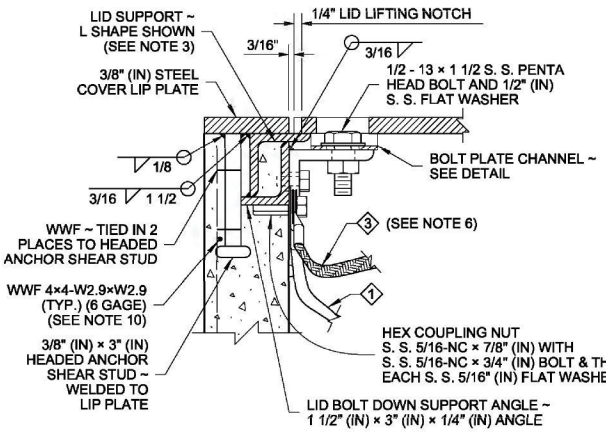

DETAIL E
ALTERNATIVE 2 SHOWN

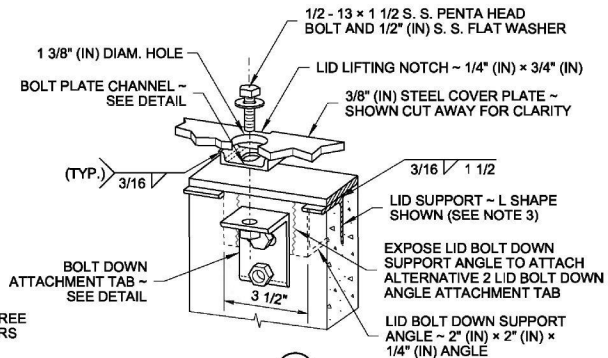

DETAIL F
ALTERNATIVE 2 SHOWN
PERSPECTIVE VIEW

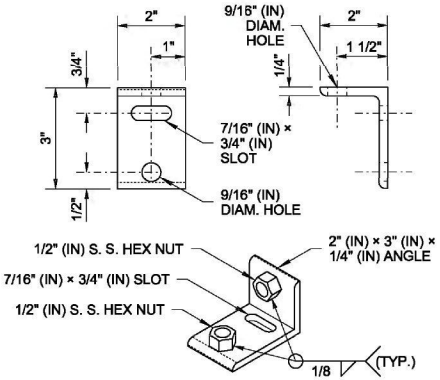

ALTERNATIVE 2
LID BOLT DOWN ATTACHMENT TAB
(SEE NOTE 12)

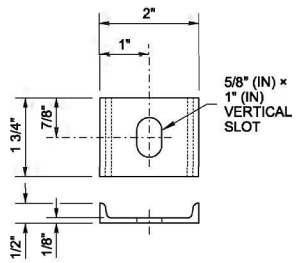

BOLT PLATE CHANNEL

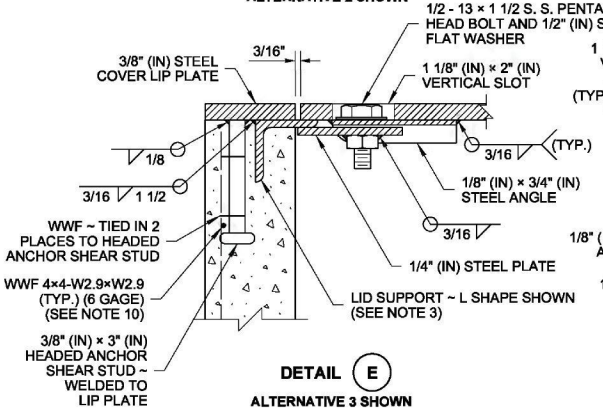

DETAIL E
ALTERNATIVE 3 SHOWN

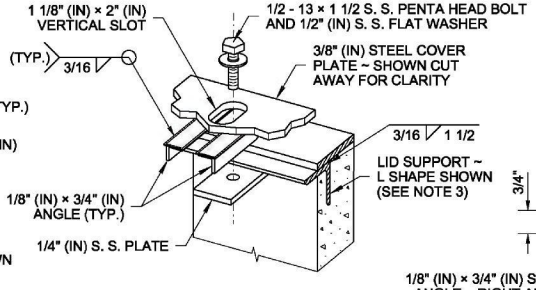

DETAIL F
ALTERNATIVE 3 SHOWN
PERSPECTIVE VIEW

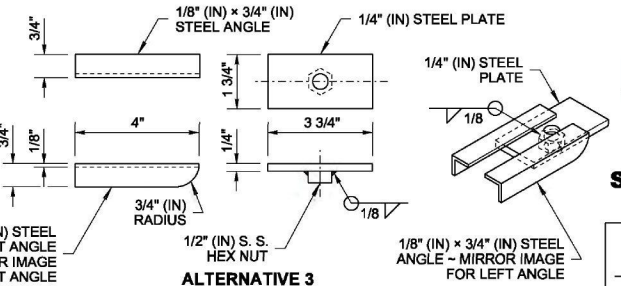

ALTERNATIVE 3
LID BOLT DOWN ATTACHMENT TAB
(SEE NOTE 12)

THEODORE JOSEPH BAILEY
STATE OF WASHINGTON
39820
REGISTERED
PROFESSIONAL ENGINEER

Bailey, Ted
Apr 25 2016 9:33 AM

LOCKING LID STANDARD DUTY JUNCTION BOX TYPES 1 & 2 STANDARD PLAN J-40.10-04

SHEET 2 OF 2 SHEETS

APPROVED FOR PUBLICATION
Carpenter, Jeff
Apr 28 2016 3:12 PM
STATE DESIGN ENGINEER
Washington State Department of Transportation

Provided to Builders Exchange of WA, Inc. For usage Conditions Agreement see www.bxwa.com - Always Verify Scal

DRAWN BY: LISA CYFORD

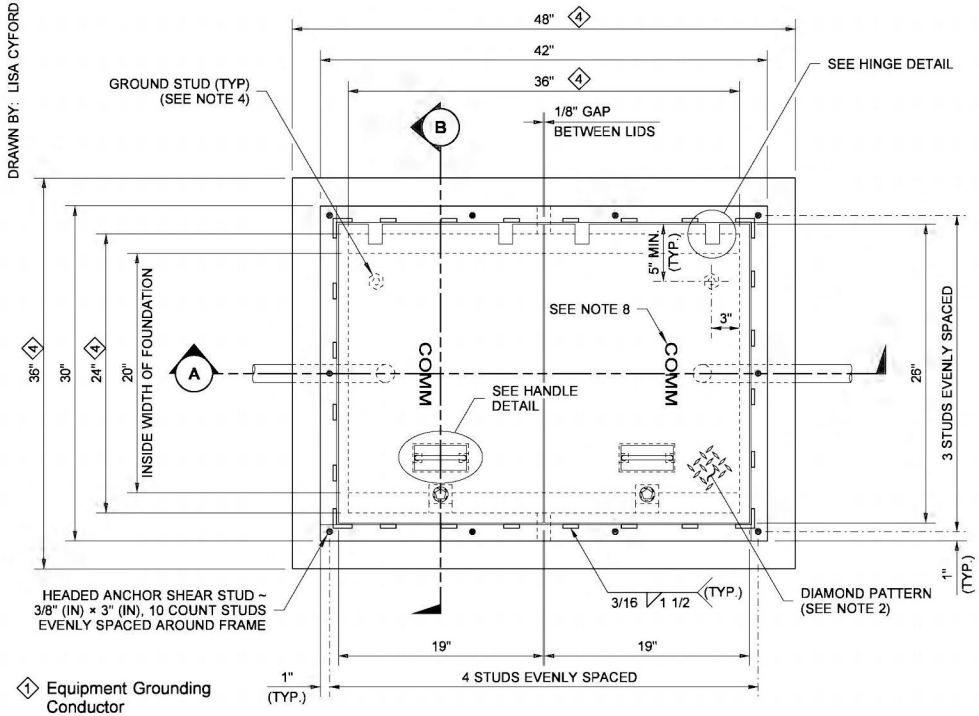

PLAN VIEW

LOCKING LID STANDARD DUTY JUNCTION BOX

1. Equipment Grounding Conductor
2. Copper Solderless Crimp Connector
3. Equipment Bonding Jumper
4. Foundation
5. See Contract for conduit size and number

COVER MARKING DETAIL

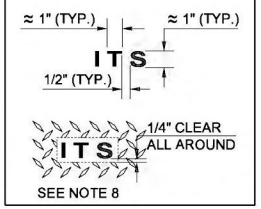

NOTES

1. All box dimensions are approximate. Exact configurations vary among manufacturers.
2. Minimum lid thicknesses are shown. Junction Boxes installed in sidewalks, walkways, and shared-use paths shall have a slip-resistant coating on the lid and lip cover plate and shall be installed with the surface flush with and matched to the grade of the sidewalk, walkway, or shared-use path. The non-slip lid shall be identified with permanent markings on the underside, indicating the type of surface treatment (see Contract Documents for details) and the year of manufacture. The permanent marking shall be 1/8" (in) line thickness formed with a mild steel weld bead and shall be placed prior to hot-dip galvanizing.
3. Lid support members shall be 3/16" (in) min. thick steel C, L, or T shape, welded to the frame. Exact configurations vary among manufacturers.
4. A 1/4-20 NC × 3/4" (in) S. S. ground stud shall be welded to the bottom of each lid; include (2) S. S. nuts and (2) S. S. flat washers.
5. The hinges shall allow the lids to open 180°.
6. Bolts and nuts shall be liberally coated with anti-seize compound.
7. Connect Equipment Bonding Jumper to ground stud on lid. As an alternative to the ground stud connection, the Equipment Bonding Jumper shall be attached to the front face of the hinge pocket with a 5/16-20 NC × 3/4" (in) S. S. bolt, (2) each S. S. nuts, and (2) each S. S. flat washers. Equipment Bonding Jumper shall be #8 AWG min. × 4' (ft) of tinned braided copper.
8. The System Identification letters shall be 1/8" (in) line thickness formed by a mild steel weld bead. See Cover Marking detail. Grind off diamond pattern before forming letters. See **Standard Specification 9-29.2(4)** for details.
9. See the **Standard Specifications** for alternative reinforcement and class of concrete.
10. See **Standard Plan J-40.10** for Welded Wire Fabric and Headed Anchor Shear Stud attachment details.
11. Capacity ~ conduit diameter = 24" (in)
12. Lid Bolt Down Attachment Tab provides a method of retrofitting by using a mechanical process in lieu of welding. Attachment Tab shown depicts a typical component arrangement; actual configurations of assembly will vary among manufacturers. See approved manufacturers' shop drawing for specifics.
13. Unless otherwise noted in the plans or approved by the Engineer, Junction Boxes, Cable Vaults and Pull Boxes shall not be placed within the sidewalk, walkway, shared use path, traveled way or paved shoulders. All Junction Boxes, Cable Vaults, and Pull Boxes placed within the traveled way or paved shoulders shall be Heavy-Duty.
14. Distance between the top of the conduit and the bottom of the Junction Box lid shall be 6" (in) min. to 8" (in) max. for final grade of new construction only. See **Standard Specification 8-20.3(5)**. Where adjustments are to be made to existing Junction Boxes, or for interim construction stages during the contract, the limits shall be from 6" (in) min. to 10" (in) max. See **Standard Specification 8-20.3(6)**.

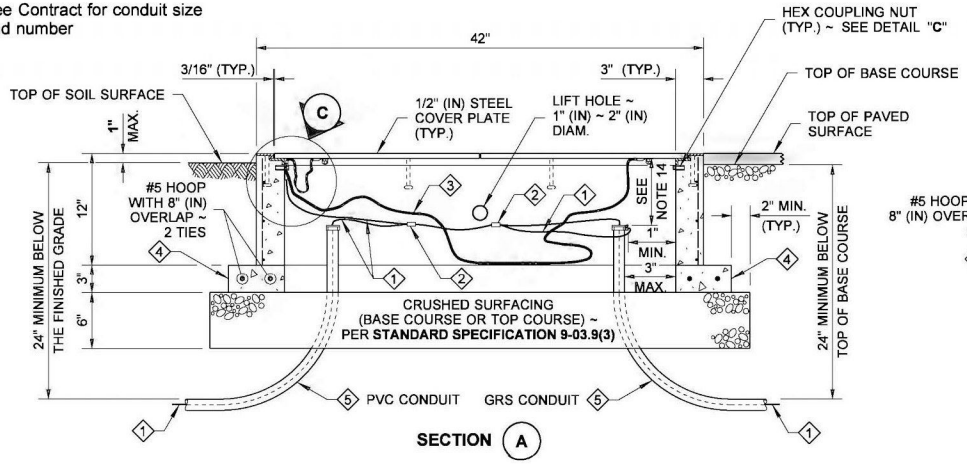

SECTION (A)

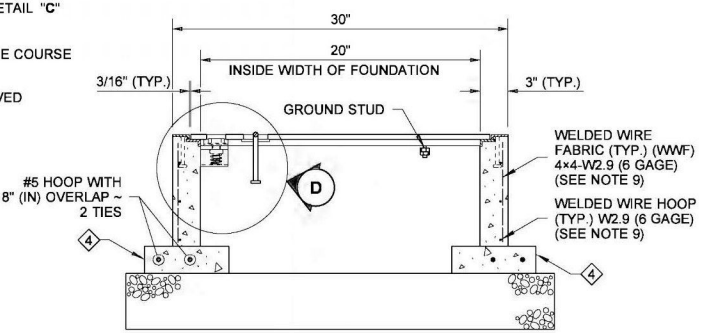

SECTION (B)

CONDUITS NOT SHOWN

THEODORE JOSEPH BAILEY
STATE OF WASHINGTON
39820
REGISTERED
PROFESSIONAL ENGINEER

Bailey, Ted
Apr 25 2016 5:09 PM

LOCKING LID STANDARD DUTY JUNCTION BOX TYPE 8
STANDARD PLAN J-40.30-04

SHEET 1 OF 2 SHEETS

APPROVED FOR PUBLICATION
Carpenter, Jeff
Apr 28 2016 3:15 PM
STATE DESIGN ENGINEER
Washington State Department of Transportation

Provided to Builders Exchange of WA, Inc. For usage Conditions Agreement see www.bxwa.com - Always Verify Scal

DRAWN BY: LISA CYFORD

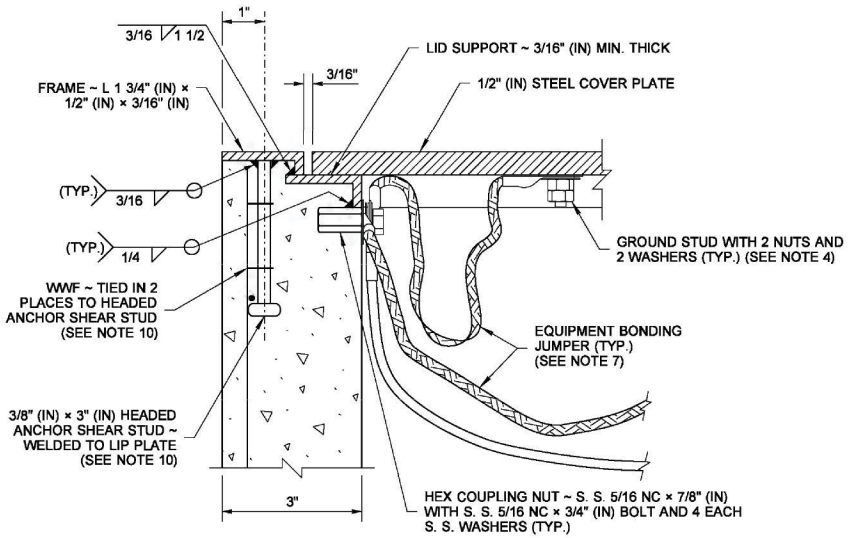

DETAIL (C)

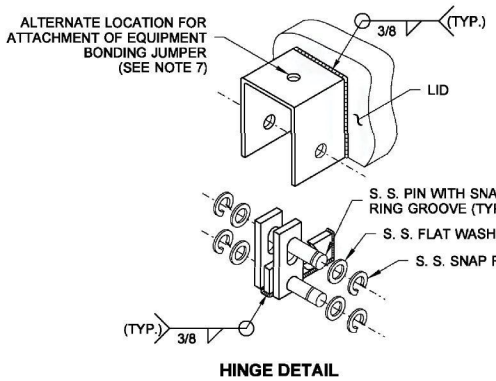

HINGE DETAIL

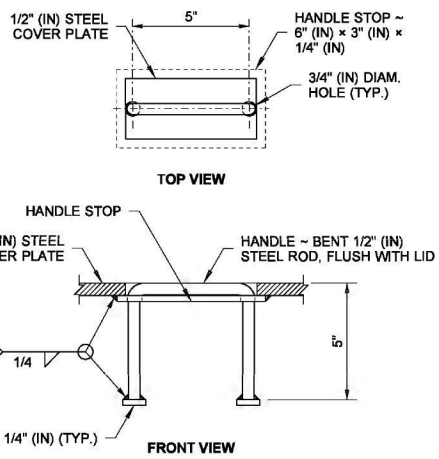

HANDLE DETAIL

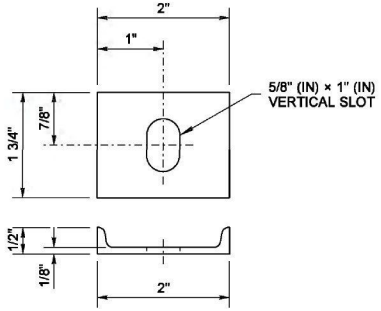

BOLT PLATE CHANNEL

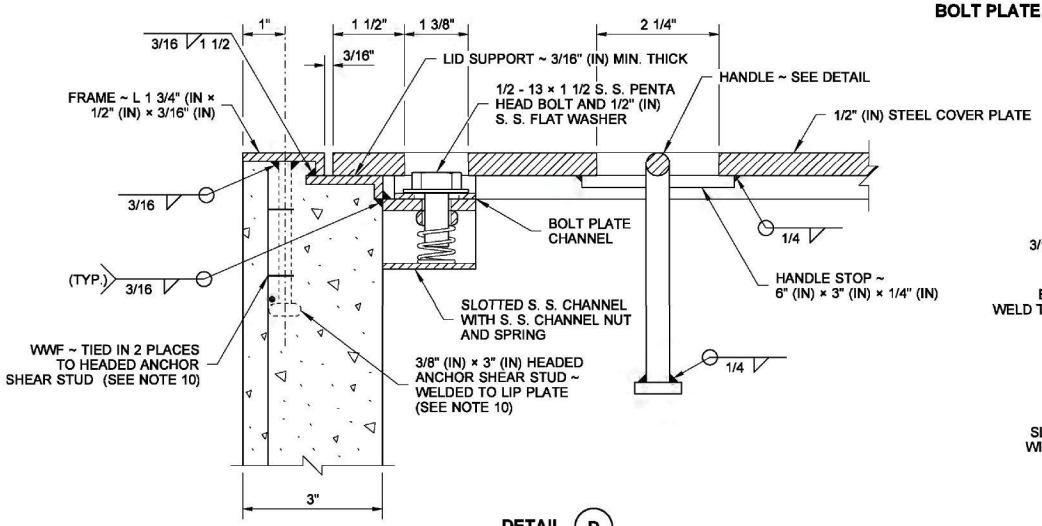

DETAIL (D)

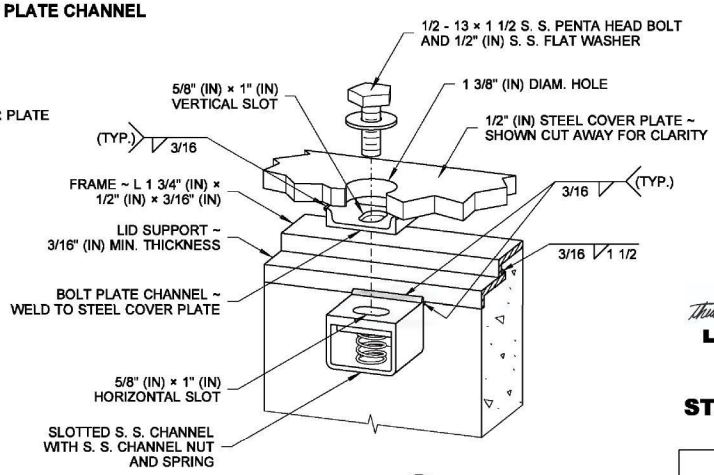

DETAIL (D)
ISOMETRIC VIEW

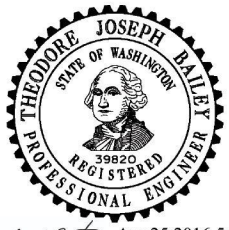

Apr 25 2016 5:10 PM

LOCKING LID STANDARD DUTY JUNCTION BOX TYPE 8
STANDARD PLAN J-40.30-04

SHEET 2 OF 2 SHEETS

APPROVED FOR PUBLICATION

Carpenter, Jeff
Apr 28 2016 3:15 PM

STATE DESIGN ENGINEER

Washington State Department of Transportation

Provided to Builders Exchange of WA, Inc. For usage Conditions Agreement see www.bxwa.com - Always Verify Scal

DRAWN BY: FERN LIDDELL

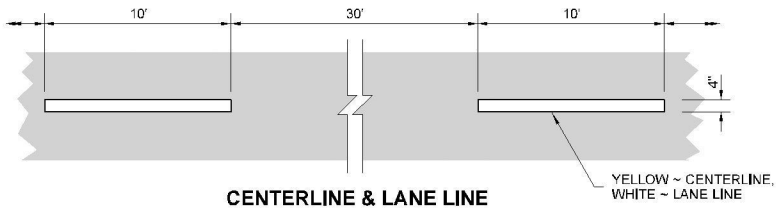

CENTERLINE & LANE LINE

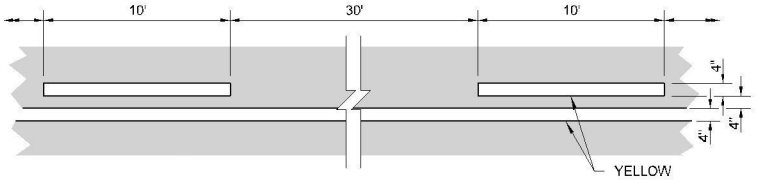

NO-PASS LINE & TWO-WAY LEFT-TURN CENTERLINE

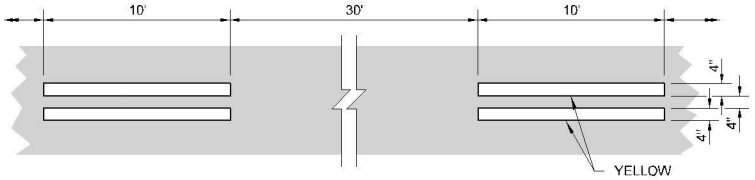

REVERSIBLE LANE LINE

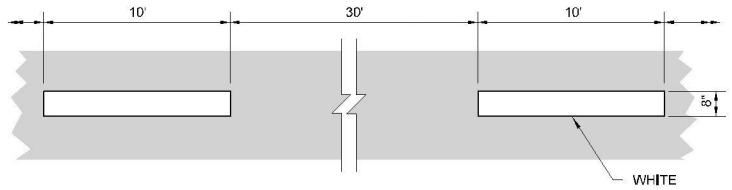

WIDE BROKEN LANE LINE

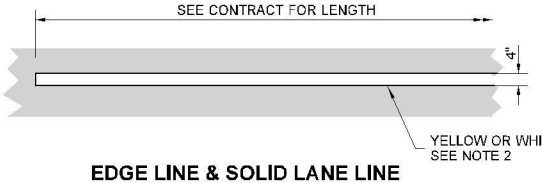

EDGE LINE & SOLID LANE LINE

NOTES

1. Dotted Extension Line shall be the same color as the line it is extending.
2. Edge Line shall be white on the right edge of traveled way, and yellow on the left edge of traveled way (on one-way roadways). Solid Lane Line shall be white.
3. The distance between the lines of the Double Centerline shall be 12" everywhere, except 4" for left-turn channelization and narrow roadways with lane widths of 10 feet or less. Local Agencies (on non-state routes) may specify a 4" distance for all locations.

   The distance between the lines of the Double Lane Line shall be 4".

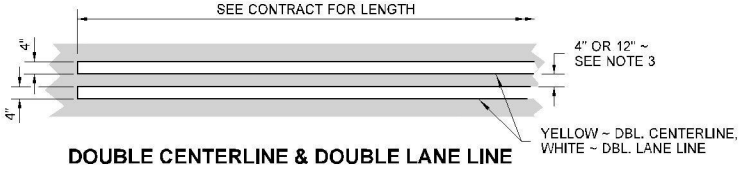

DOUBLE CENTERLINE & DOUBLE LANE LINE

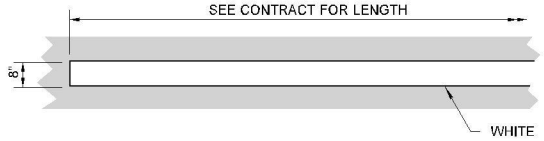

WIDE EDGE LINE & WIDE SOLID LANE LINE

OPTION TO USE AS CIRCULATORY ON ROUNDABOUT APPLICATIONS

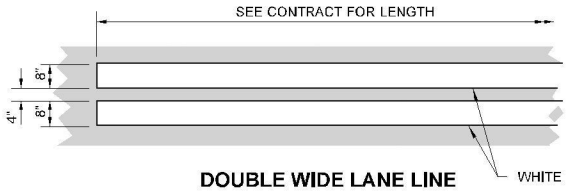

DOUBLE WIDE LANE LINE

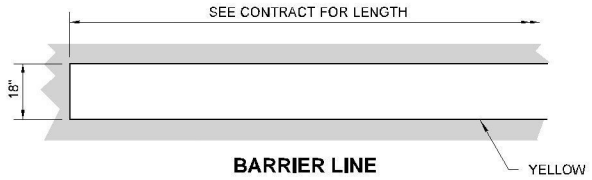

BARRIER LINE



Aug 1, 2022

LONGITUDINAL MARKING PATTERNS

STANDARD PLAN M-20.10-04

SHEET 1 OF 4 SHEETS

APPROVED FOR PUBLICATION

Mark Gaines Aug 2, 2022

STATE DESIGN ENGINEER

Washington State Department of Transportation

Provided to Builders Exchange of WA, Inc. For usage Conditions Agreement see www.bxwa.com - Always Verify Scal

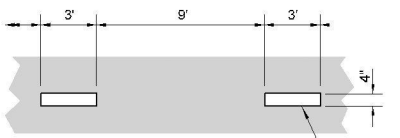

DOTTED LANE LINE

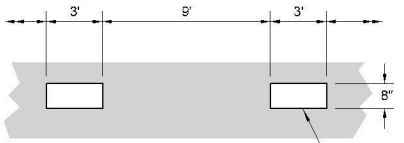

WIDE DOTTED LANE LINE

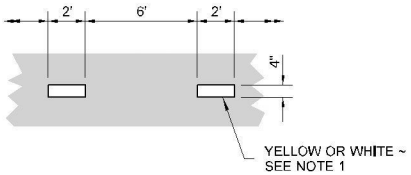

DOTTED EXTENSION LINE

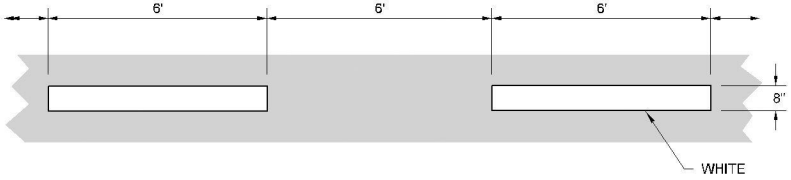

WIDE DOTTED EXTENSION LINE

DRAWN BY: FERN LIDDELL

ROUNDABOUT SPECIFIC LINES

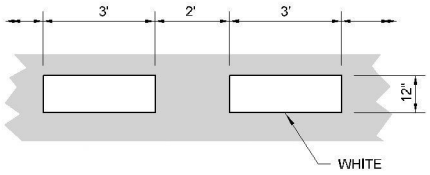

WIDE DOTTED ENTRY LINE

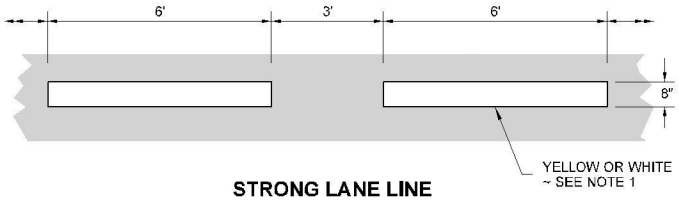

STRONG LANE LINE

OPTION TO USE AS CIRCULATORY ON ROUNDABOUT APPLICATIONS

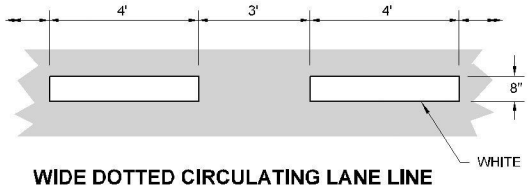

WIDE DOTTED CIRCULATING LANE LINE



Aug 1, 2022

LONGITUDINAL MARKING PATTERNS

STANDARD PLAN M-20.10-04

SHEET 2 OF 4 SHEETS

APPROVED FOR PUBLICATION

Mark Gaines Aug 2, 2022

STATE DESIGN ENGINEER

Washington State Department of Transportation

Provided to Builders Exchange of WA, Inc. For usage Conditions Agreement see www.bxwa.com - Always Verify Scal

DRAWN BY: FERN LIDDELL

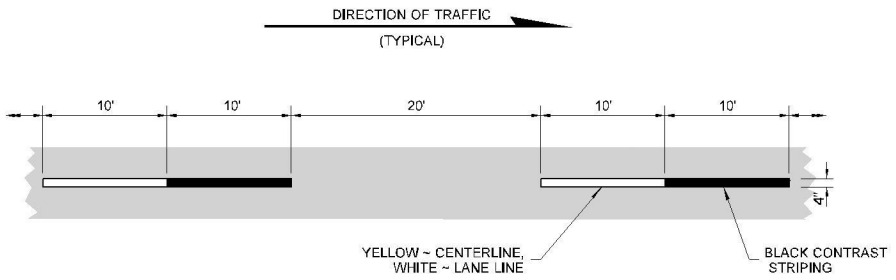

CENTERLINE & LANE LINE

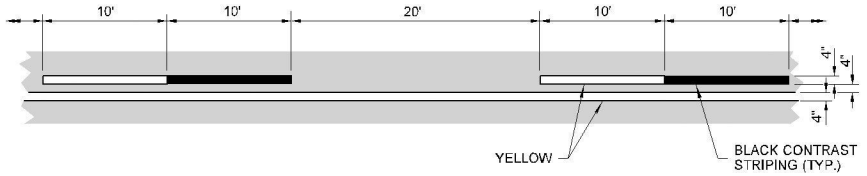

NO-PASS LINE & TWO-WAY LEFT-TURN CENTERLINE

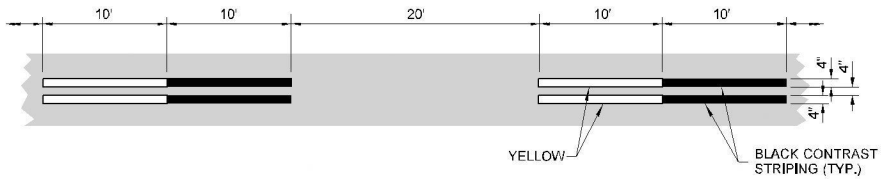

REVERSIBLE LANE LINE

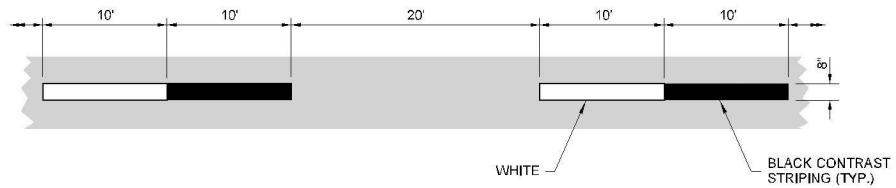

WIDE BROKEN LANE LINE

NOTE

1. Dotted Extension Line shall be the same color as the line it is extending.

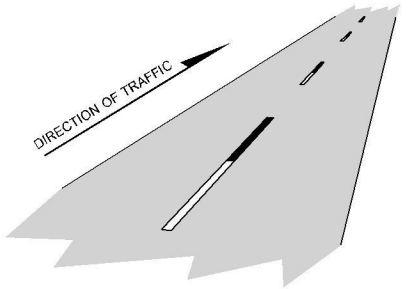

ISOMETRIC VIEW

BRIAN J. WALSH
STATE OF WASHINGTON
36103
REGISTERED
PROFESSIONAL ENGINEER

Aug 1, 2022

LONGITUDINAL MARKING PATTERNS

STANDARD PLAN M-20.10-04

SHEET 3 OF 4 SHEETS

APPROVED FOR PUBLICATION

Aug 2, 2022

STATE DESIGN ENGINEER

Washington State Department of Transportation

Provided to Builders Exchange of WA, Inc. For usage Conditions Agreement see www.bxwa.com - Always Verify Scal

DRAWN BY: FERN LIDDELL

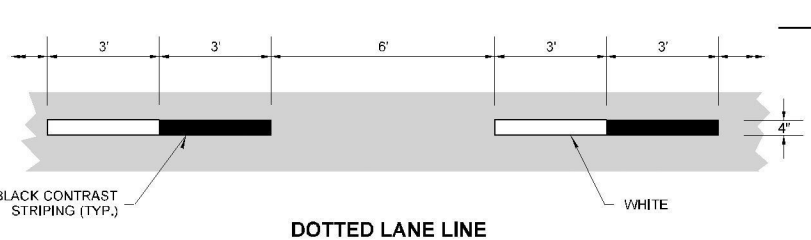

DOTTED LANE LINE

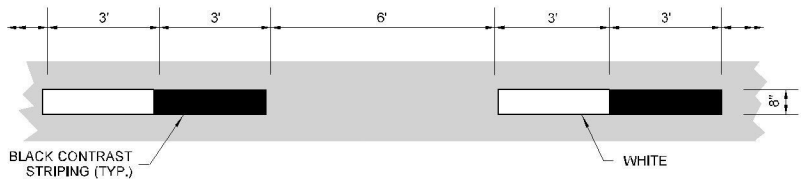

WIDE DOTTED LANE LINE

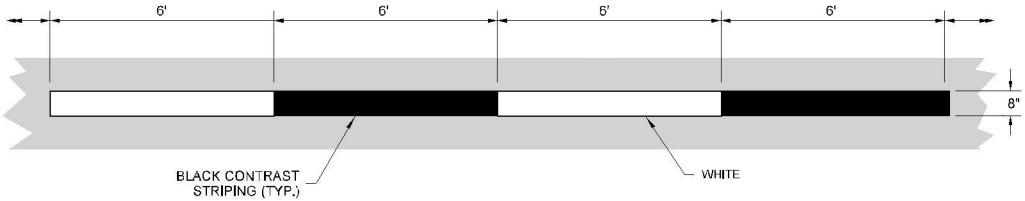

WIDE DOTTED EXTENSION LINE

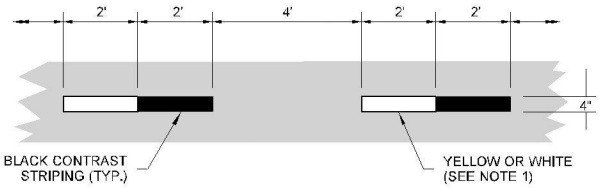

DOTTED EXTENSION LINE

ROUNDABOUT SPECIFIC LINES

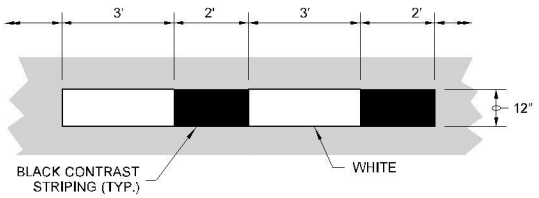

WIDE DOTTED ENTRY LINE

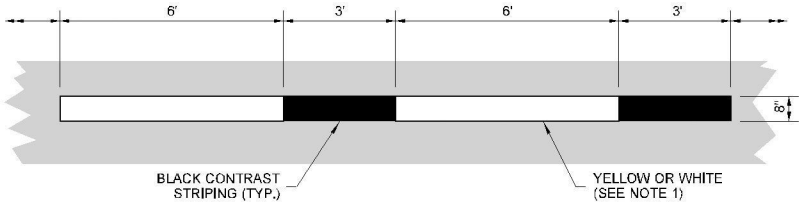

STRONG LANE LINE

OPTION TO USE AS CIRCULATORY ON ROUNDABOUT APPLICATIONS

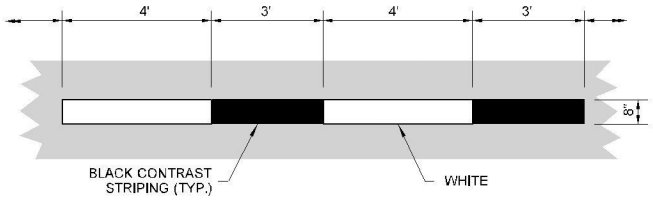

WIDE DOTTED CIRCULATING LANE LINE



Aug 1, 2022

LONGITUDINAL MARKING PATTERNS

STANDARD PLAN M-20.10-04

SHEET 4 OF 4 SHEETS

APPROVED FOR PUBLICATION

Mark Gaines Aug 2, 2022

STATE DESIGN ENGINEER

Washington State Department of Transportation

Provided to Builders Exchange of WA, Inc. For usage Conditions Agreement see www.bxwa.com - Always Verify Scal

DRAWN BY: LISA CYFORD

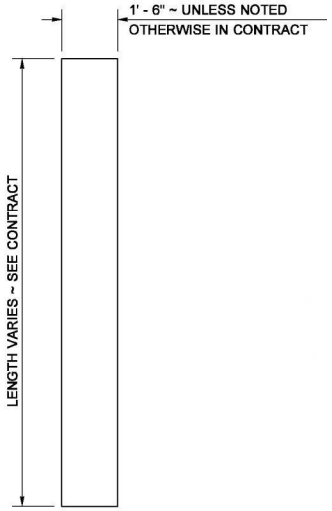

STOP LINE

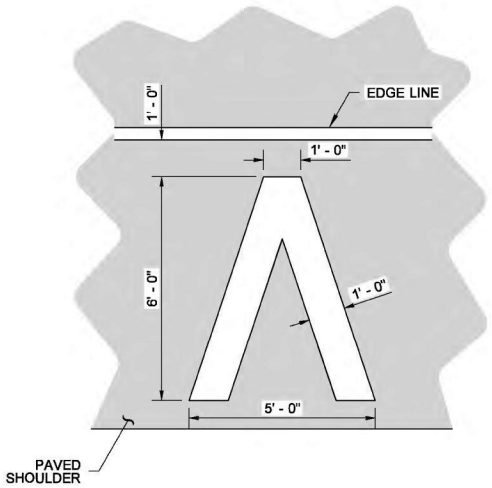

MARKING AREA = 11.73 SQ.FT.

HALF-MILE MARKER

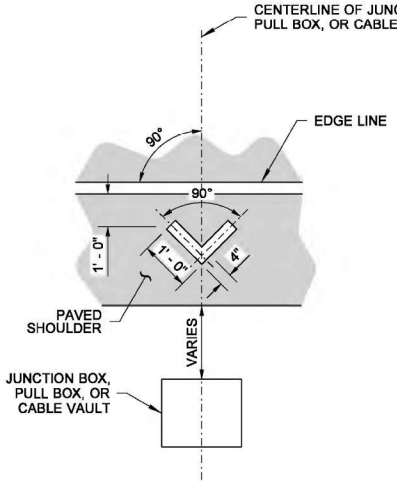

MARKING AREA = 0.56 SQ. FT.

JUNCTION BOX, PULL BOX, OR CABLE VAULT MARKINGS

NOTE

1. If Rumble Strips are present, install marking outside of the Rumble Strip.

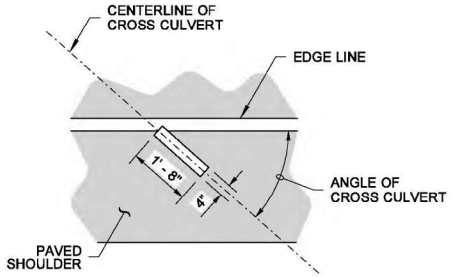

MARKING AREA = 0.56 SQ.FT.

CROSS CULVERT

DRAINAGE MARKING

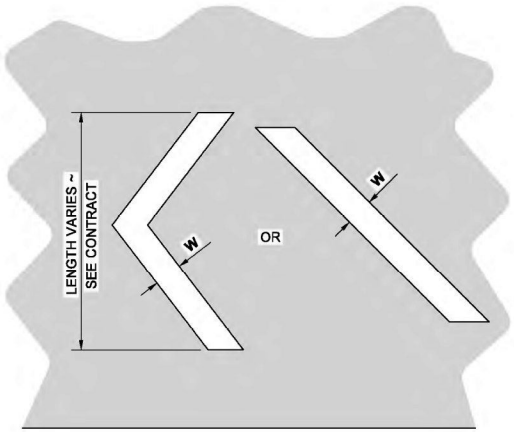

WHITE OR YELLOW ~ SEE CONTRACT

CHEVRON OR DIAGONAL

CROSSHATCH MARKING

W = 8" (IN) FOR POSTED SPEED LIMIT OF 40 MPH OR LOWER
W = 12" (IN) FOR POSTED SPEED LIMIT OF 45 MPH OR HIGHER

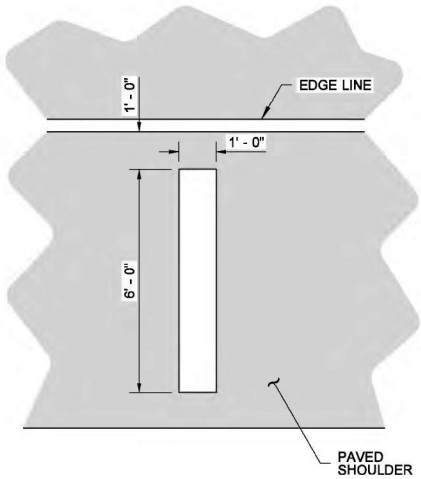

MARKING AREA = 6.00 SQ.FT.

FULL MILE MARKER

AERIAL SURVEILLANCE MARKERS

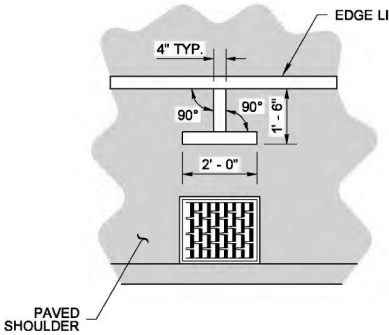

MARKING AREA = 1.06 SQ.FT.

DRAINAGE STRUCTURE INLET

DRAINAGE MARKING

BRIAN J. WALSH
STATE OF WASHINGTON
36103
REGISTERED
PROFESSIONAL ENGINEER

Walsh, Brian
Jun 24 2014 2:35 PM

SYMBOL MARKINGS MISCELLANEOUS

STANDARD PLAN M-24.60-04

SHEET 1 OF 2 SHEETS

APPROVED FOR PUBLICATION
Bakotich, Pasco
Jun 24 2014 4:43 PM
STATE DESIGN ENGINEER
Washington State Department of Transportation

Provided to Builders Exchange of WA, Inc. For usage Conditions Agreement see www.bxwa.com - Always Verify Scal

DRAWN BY: LISA CYFORD

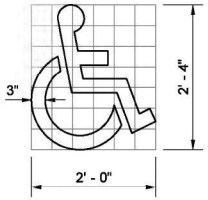

GRID IS 4" (IN) SQUARE MARKING AREA = 1.41 SQ.FT.

ACCESS PARKING SPACE SYMBOL (MINIMUM)

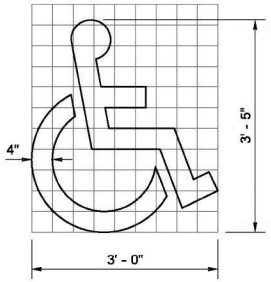

GRID IS 4" (IN) SQUARE MARKING AREA = 3.09 SQ.FT.

ACCESS PARKING SPACE SYMBOL (STANDARD)

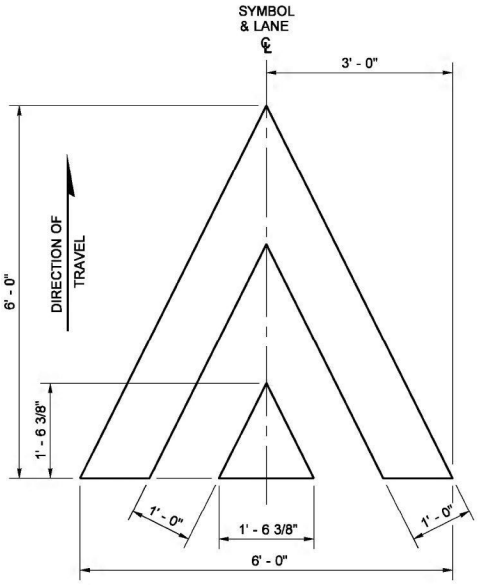

MARKING AREA = 12.08 SQ.FT.

SPEED BUMP SYMBOL

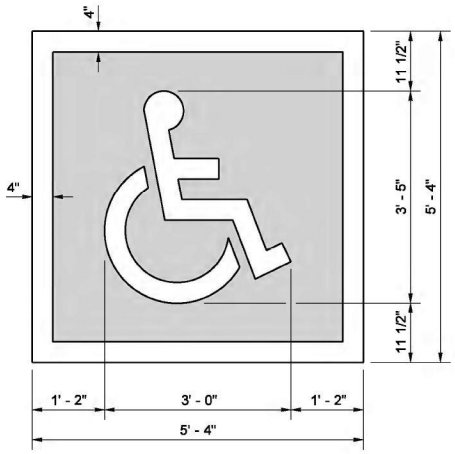

TOTAL MARKING AREA = 28.44 SQ.FT.
WHITE = 9.76 SQ.FT. BLUE = 18.69 SQ.FT.

ACCESS PARKING SPACE SYMBOL (STANDARD)
WITH BLUE BACKGROUND AND WHITE BORDER
(REQUIRED FOR CEMENT CONCRETE SURFACES)

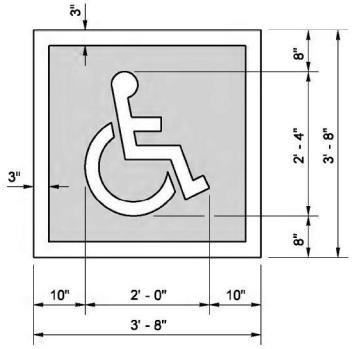

TOTAL MARKING AREA = 13.44 SQ.FT.
WHITE = 4.82 SQ.FT. BLUE = 8.62 SQ.FT.

ACCESS PARKING SPACE SYMBOL (MINIMUM)
WITH BLUE BACKGROUND AND WHITE BORDER
(REQUIRED FOR CEMENT CONCRETE SURFACES)

SYMBOL MARKING		A	B	C	D	USE	MARKING AREA
YIELD AHEAD SYMBOL	TYPE 1	6' - 0"	2' - 6"	13' - 0"	N/A	LESS THAN 45 MPH	25.90 SQ.FT.
	TYPE 2	6' - 0"	3' - 0"	20' - 0"	N/A	45 MPH OR GREATER	36.54 SQ.FT.
YIELD LINE SYMBOL	TYPE 1	1' - 0"	6"	1' - 6"	6"	LESS THAN 45 MPH	0.75 SQ.FT.
	TYPE 2	2' - 0"	1' - 0"	3' - 0"	1' - 0"	45 MPH OR GREATER	3.00 SQ.FT.
	TYPE 2	2' - 0"	1' - 0"	3' - 0"	1' - 0"	ROUNDABOUT ENTRY *	3.00 SQ.FT.

* MINIMUM OF 4 IN LANE

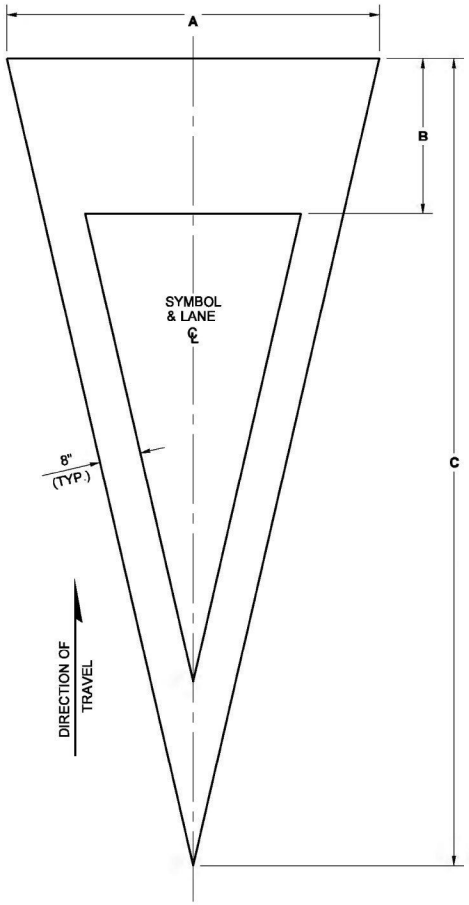

YIELD AHEAD SYMBOL

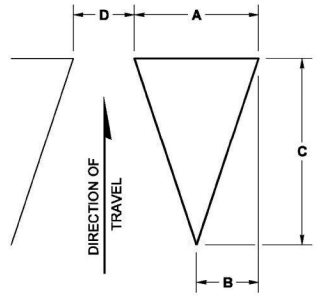

YIELD LINE SYMBOL
(MULTIPLE SYMBOLS REQUIRED FOR TRANSVERSE YIELD LINE ~ SEE CONTRACT)

BRIAN J. WALSH
STATE OF WASHINGTON
36103
REGISTERED
PROFESSIONAL ENGINEER

Walsh, Brian
Jun 24 2014 2:37 PM

SYMBOL MARKINGS MISCELLANEOUS

STANDARD PLAN M-24.60-04

SHEET 2 OF 2 SHEETS

APPROVED FOR PUBLICATION
Bakotich, Pasco
Jun 24 2014 4:43 PM
STATE DESIGN ENGINEER
Washington State Department of Transportation

Provided to Builders Exchange of WA, Inc. For usage Conditions Agreement see www.bxwa.com - Always Verify Scal